Spare parts catalogue ***400***

DUCATI *MONSTER*

DUCATI*MOTOR HOLDING*	**MONSTER 400**	M.Y. '05	
Spare Parts Department	P.N. 91511022E	Febbraio - February '05	Edizione - Edition 01

DUCATI*MOTOR HOLDING*	**MONSTER 400**	M.Y. '05	
Spare Parts Department	P.N. 91511022E	Febbraio - February '05	Edizione - Edition 01

DUCATI*MOTOR HOLDING*	**MONSTER 400**	M.Y. '05	
Spare Parts Department	P.N. 91511022E	Febbraio - February '05	Edizione - Edition 01

DUCATI*MOTOR HOLDING*	**MONSTER 400**	M.Y. '05	
Spare Parts Department	P.N. 91511022E	Febbraio - February '05	Edizione - Edition 01

GENERAL INFORMATION

The present spare parts order exactly the right spare parts

When ordering specify:

1) the part's code number followed by its description; quantity needed;

2) the motorcycle's serial number, stamped on the steering head.

Reference to right and left apply to the vehicle in terms of its direction of move-ment.

Spare parts drawings are general and do not represent the part.

The contents of this catalogue are general and can undergo changes without prior notice.

VALIDITY

f.m.	Until V.I.N.
d.m.	From V.I.N.
f.m.m.	Up to engine number
d.m.m.	From engine number

LIST

CAL	California
CND	Canada

Ducati Motor Holding S.p.A.
Commercial and Administation Office:
Via A. Cavalieri Ducati n. 3
40132 Bologna, Italy
Telefono 051 6413111
Fax 051 406580
Internet www.ducati.com

CATALOGUE No: 915.1.102.2E
ISSUED: 02 - 05

CATALOGUE No: 915.1.102.2E
ISSUED: 02 - 05

Paint	Code PPG
"Rosso Anniversary DUCATI"	F_473.101
"Nero Lucido DUCATI"	248.514
"Grigio Scuro Metallizzato"	*0017

page CONTENTS

page		
4	001	WORKSHOP SPECIAL TOOLS
8	001a	WORKSHOP SPECIAL TOOLS
10	001b	DIAGNOSIS TESTER MATHESIS
14	001c	WORKSHOP SPECIAL TOOLS
16	002	GEARCHANGE
20	003	GEAR-BOX
24	004	CLUTCH
26	005	CLUTCH COVER
28	006	CRANKSHAFT
32	007	CYLINDERS - PISTONS
34	008	TIMING
36	009	FILTERS AND OIL PUMP
40	010	HALF CRANKCASES
44	011	ALTERNATOR COVER
48	012	ELECTRIC STARTER AND IGNITION
50	013	HEAD : TIMING
52	014	VERTICAL HEAD
56	015	HORIZONTAL HEAD
60	016	INLET DICT
64	017	STANDS
66	018	ELECTRIC SYSTEM
70	019	BATTERY BOX MOUNT
72	020	EXHAUST SYSTEM
74	021	INSTRUMENT PANEL
76	022	FRONT HEAD-LIGHT
78	023	PLATE HOLDER - REAR LIGHT
80	024	FRONT FORK
82	025	FRONT AND REAR WHEELS
86	026	HANDLEBAR AND CONTROLS
90	027	CLUTCH CONTROL
92	028	FRONT BRAKE
94	029	REAR BRAKE
98	030	FRAME
102	031	GEARCHANGE LEVER - FOOT REST
106	032	SWINGARM AND CHAIN
108	033	REAR SUSPENSION
110	034	AIR INDUCTIO AND OIL VENT
112	035	FUEL TANK
114	036	FUEL SYSTEM
116	037	SEAT

CATALOGUE No: 915.1.102.2E
ISSUED: 02 - 05

DRAWING 001 WORKSHOP SPECIAL TOOLS

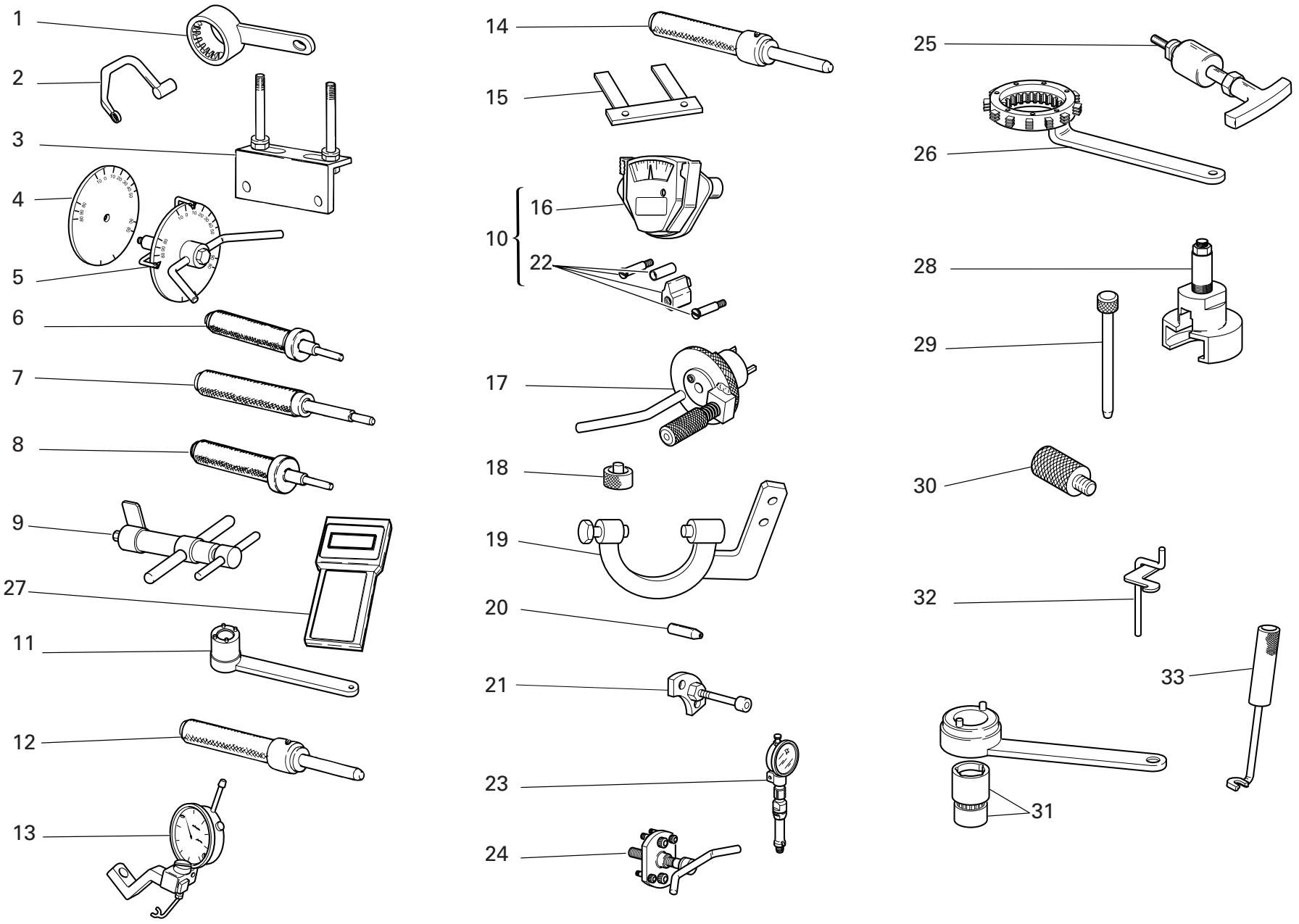

DRAWING 001 WORKSHOP SPECIAL TOOLS

NOTES NO.	CODE NO.	DESCRIPTION	VALIDITY	Q.TY
1	88713.2107	Wrench for holding timing belt rollers ring nuts		1
2	88713.2676	Head nuts holder wrench		1
3	88713.2103	Head mounting base		1
4	98112.0002	Degree wheel		1
5	88713.0123	Degree wheel holder tool for ignition advance check		1
6	88713.0874	Exhaust valve guide punch tool		1
7	88713.0879	Punch tool to extract valve guide		1
8	88713.0875	Intake valve guide punch tool		1
9	88713.1215	Torque wrench for timing belt		1
10	051.2.001.1A	Torque wrench for timing belt		1
11	88713.0137	Crankshaft gear holder wrench for tightening nut		1
12	88713.1078	Punch tool for driving exhaust valve seat		1
13	88765.1058	Valve lift gauge		1
14	88713.1079	Punch tool for driving intake valve seat		1
15	88765.1000	Fork feeler gauge 0.1 mm		1
15	88765.1005	Fork feeler gauge 0.2 mm		1
15	88765.1006	Fork feeler gauge 0.3 mm		1
16	88765.0999	Timing belt control gauge		1
17	88713.2011	Tool to hold crankshaft in TDC position		1
18	88765.1322	Spacer for checking lower valve shim		1
19	88713.2036	Flywheel Wrench		1
20	88700.5749	Crankcases assembling cap		1
21	88713.1091	Plate for positioning gear engagement fork		1
22	88765.1086	Conversion kit for 2V belts tensioning tool		1
23	88765.1297	T.D.C. control gauge		1

NOTES NO.	CODE NO.	DESCRIPTION	VALIDITY	Q.TY
24	88713.1749	Drive roller puller		1
25	88713.1994	Rocker shaft extractor		1
26	88713.2133	Wrench to hold cluch housing drum steady		1
27	88765.1375AF	Check intrument		1
GB 27	88765.1375BF	Check intrument		1
D 27	88765.1375CF	Check intrument		1
F 27	88765.1375DF	Check intrument		1
E 27	88765.1375EF	Check intrument		1
28	88713.2092	Extractor for primary drive gear		1
29	88713.0262	Pin for assembling rocker arms		1
30	88713.2009	Belt roller timing of two-valva head		1
31	88700.5644	Wrench for camshaft pulley ring nut adjustment		1
32	88713.2362	Tool for assembling closing rocker and spring		1
33	88713.0844	Half-rings mounting punch tool		1
34	88713.2107	Wrench for holding timing belt rollers ring nuts		1

CATALOGUE No: 915.1.102.2E
ISSUED: 02 - 05

DRAWING 001a WORKSHOP SPECIAL TOOLS

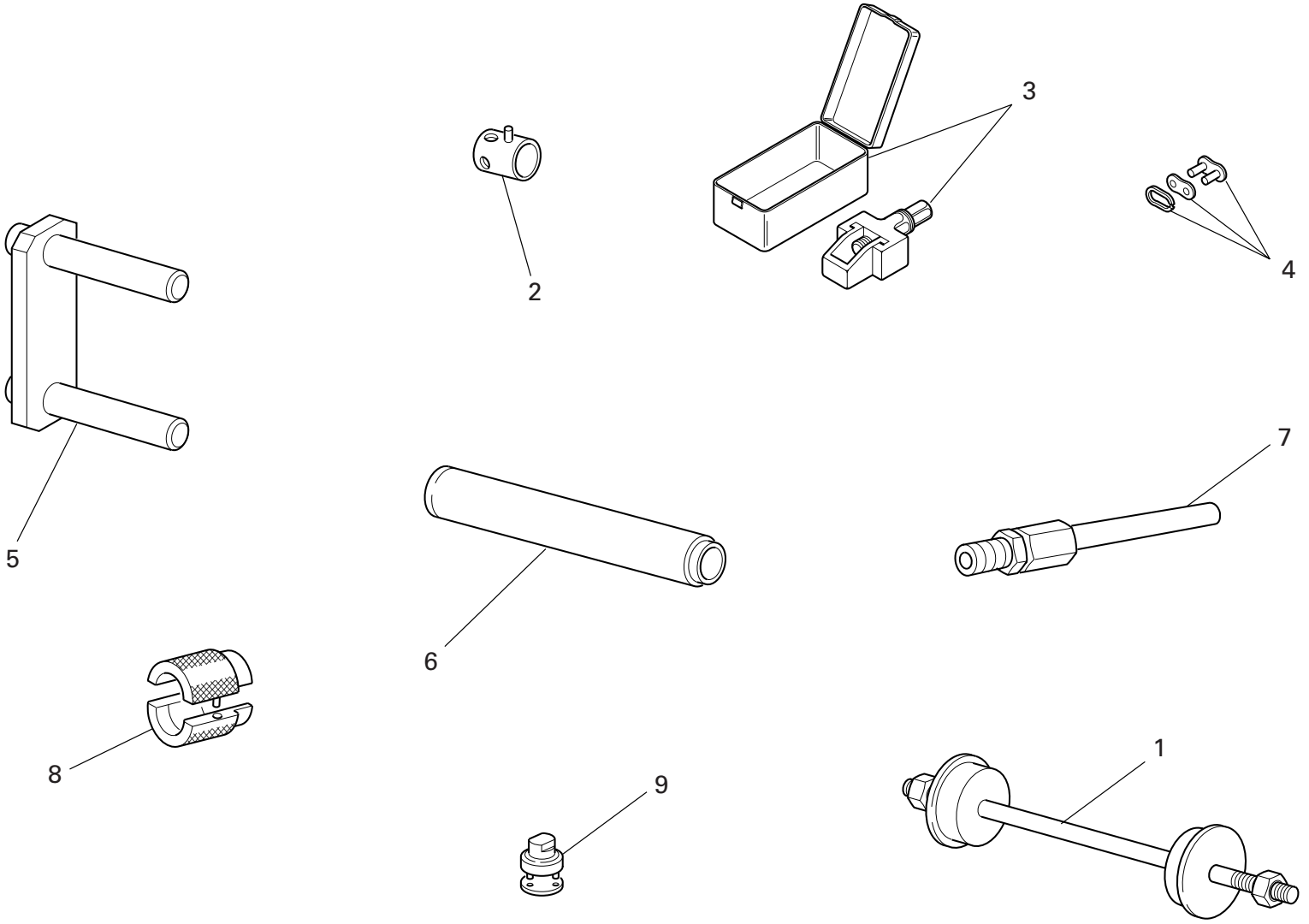

DRAWING 001a WORKSHOP SPECIAL TOOLS

NOTES NO.	CODE NO.	DESCRIPTION	VALIDITY	Q.TY
1	88713.1062	Tool for assembling the steering head bearings		1
2	8000.70139	Wrench for front wheel spindle		1
3	88713.1344	Tool for assembling chain		1
4	677.4.003.1A	Coupling		1
5	88713.1515	Frame/engine mount		1
6	88713.1072	Stopper for driving the half bearing of the steering head base		1
7	88713.1010	Union for exhaust gas suction		1
8	88713.1096	Tool for overhauling SHOWA forks - assembling seal ring		1
9	88713.1058	Wrench for assembling the steering head cap		1

NOTES NO.	CODE NO.	DESCRIPTION	VALIDITY	Q.TY

DRAWING 001b DIAGNOSIS TESTER MATHESIS

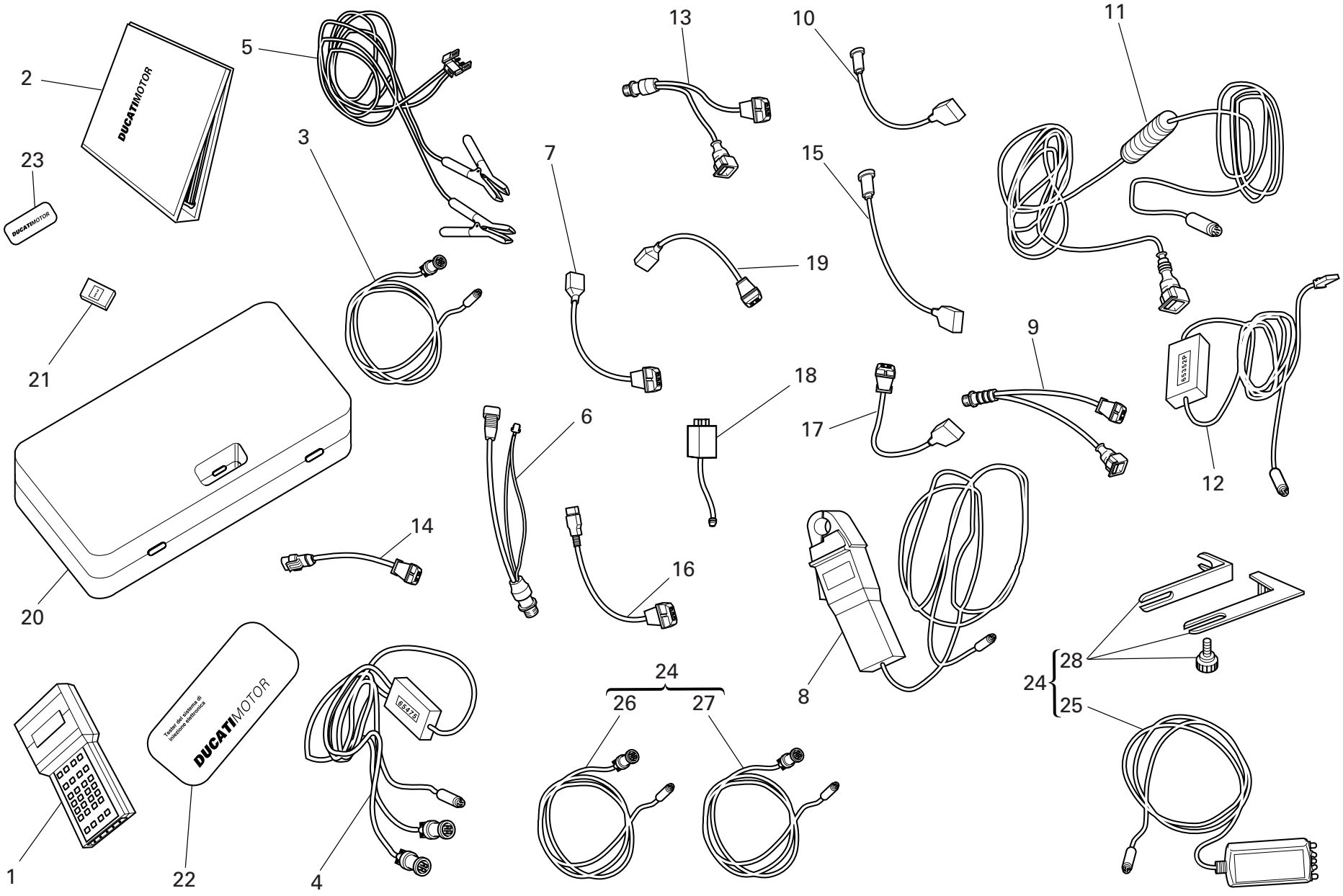

DRAWING 001b DIAGNOSIS TESTER MATHESIS

NOTES NO.	CODE NO.	DESCRIPTION	VALIDITY	Q.TY
1	88765.1126Z	Bare Mathesis		1
2	914.7.023.1A	Italian manual		1
2	914.7.023.1B	English manual		1
2	914.7.023.1C	German manual		1
2	914.7.023.1D	Franch manual		1
2	914.7.023.1E	Spanish manual		1
3	88765.1126R	Main cable Mathesis		1
4	88765.1126A	Pickup Control cable		1
5	88765.1126Q	Battery mains cable		1
6	88765.1126	Mains cable adapter for self diagnosis		1
7	88765.1126N	Sensor for absolute pressure sampling		1
8	88765.1126V	Amperometer plier		1
9	88765.1126E	Adapter for 3 wires Pickup test cable		1
10	88765.1126P	Sensor for air temperature sampling		1
11	88765.1126C	Cable for potentiometer adjustement		1
12	88765.1126B	Test cable and speed indicator adjustement		1
13	88765.1126F	Adapter for 2 wires Pickup test cable		1
14	88765.1126D	Adapter for potentiometer adjustement		1
15	552.4.028.1A	Sensor for small throttle potentiometer sampling		1
16	88765.1126H	Sensor for throttle potentiomer sampling		1
17	88765.1126G	Sensor for air/water temperature sampling		1
18	88765.1126M	Sfety remote switch		1
19	88765.1126L	2 Wires sampling Pickup sensor		1
20	88765.1126U	Case with sponge		1
21	88765.1073	Memory card reader		1
21	88765.1074	English memory card		1
21	88765.1075	German memory card		1
21	88765.1076	French memory card		1
21	88765.1077	Spanish memory card		1
22	88765.1126S	DUCATI sticker for case		1
23	88765.1126T	DUCATI sticker RH/LH side		1
24	88765.1369A	Belt tensioning kit		1
GB 24	88765.1369B	Belt tensioning kit		1
D 24	88765.1369C	Belt tensioning kit		1
F 24	88765.1369D	Belt tensioning kit		1
E 24	88765.1369E	Belt tensioning kit		1
25	88765.1371	Sensor		1
26	88765.1372	Main cable		1
27	88765.1373	Cable extension		1
28	88765.1374	Bracket		1

CATALOGUE No: 915.1.102.2E
ISSUED: 02 - 05

DRAWING 001c WORKSHOP SPECIAL TOOLS

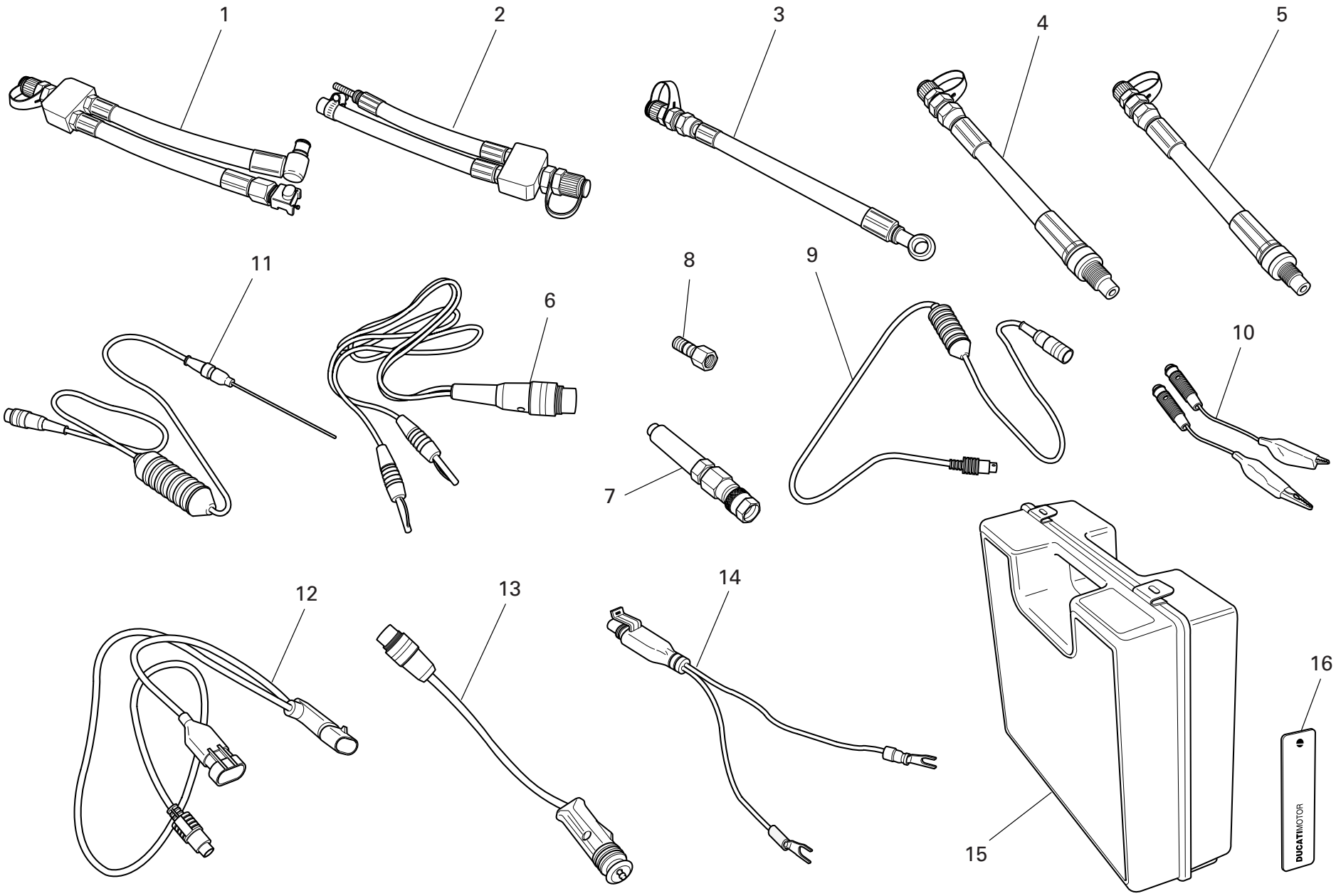

DRAWING 001c WORKSHOP SPECIAL TOOLS

NOTES NO.	CODE NO.	DESCRIPTION	VALIDITY	Q.TY
-	88765.1241	Check intrument		1
GB -	88765.1242	Check intrument		1
D -	88765.1243	Check intrument		1
F -	88765.1244	Check intrument		1
E -	88765.1245	Check intrument		1
1	590.1.189.1A	Fuel pressure line HS.		1
2	590.1.190.1A	Fuel pressure line ST/SS/M.		1
3	875.1.065.1A	Oil pressure line		1
4	552.1.037.1A	Fitting - cylinder compression M12		1
5	552.1.038.1A	Fitting - cylinder compression M10		1
6	514.1.037.1A	Cable Volt PF DUC 21		1
7	552.1.039.1A	Pressure sensor		1
8	814.1.114.1A	Oil pressure fitting		1
9	514.1.032.1A	Cable for supplementary tests		1
10	514.1.035.1A	Red clamp cable		1
10	514.1.036.1A	Black clamp cable		1
11	552.1.040.1A	Temperature probe		1
12	514.1.034.1A	Main cable PF A621		1
13	514.1.033.1A	Electric lighter connection adapter (ST)		1
14	514.1.038.1A	Battery connection adapter		1
15	698.1.033.1A	Red case with sponge rubber		1
16	88765.1126T	DUCATI sticker RH/LH side		2

NOTES NO.	CODE NO.	DESCRIPTION	VALIDITY	Q.TY

CATALOGUE No: 915.1.102.2E
ISSUED: 02 - 05

DRAWING 002 GEARCHANGE

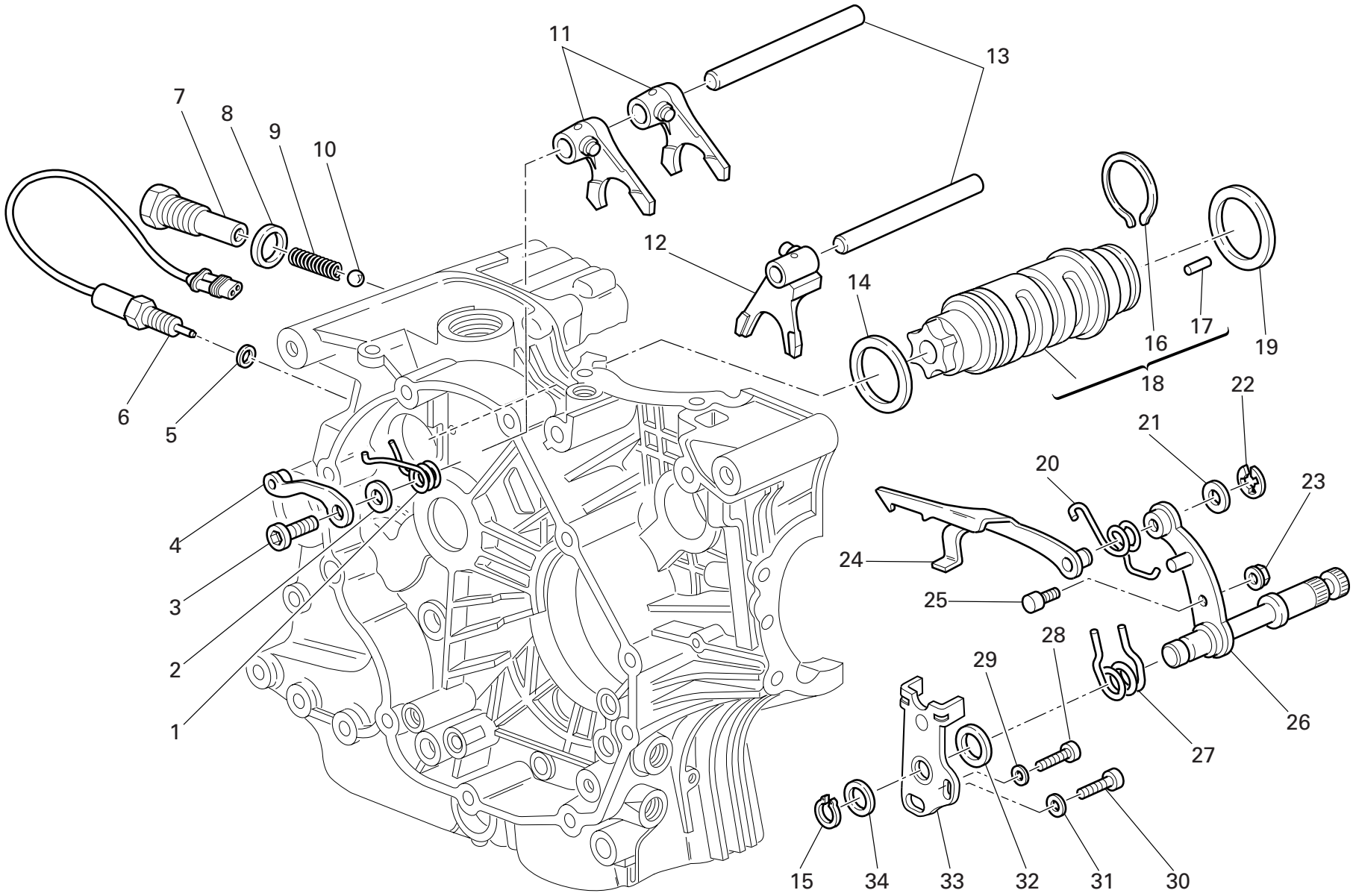

DRAWING 002 GEARCHANGE

NOTES NO.	CODE NO.	DESCRIPTION	VALIDITY	Q.TY
1	799.1.049.1A	Return spring		1
2	852.1.053.2A	Washer		1
3	779.1.039.1A	Special screw		1
4	455.2.003.1A	Gear stopper assembly		1
5	420.2.001.0A	Gasket th.1		1
6	539.1.021.1A	Switch		1
7	779.1.203.2A	Push rod holder		1
8	0272.91.090	Gasket		1
9	0660.13.143	Gear selector spring		1
10	76835.1134	Ball		1
11	0340.13.075	1st,4th-2nd,3rd gear selector fork		2
12	0340.13.080	5th,6th gear selector fork		1
13	0660.13.070	Fork pin		2
14	852.1.005.1A	Shim th. 1		1
14	852.1.093.1A	Shim th. 0.9		1
15	73500.1542	Circlip		1
16	882.1.006.1A	Needle retaining ring (square cross-section)		1
17	821.1.070.1A	Special roller (square cross-section)		6
18	182.2.018.1A	Complete gearbox drum		1
19	0660.13.060	Shim th. 1		1
19	852.1.094.1A	Shim th. 0.9		1
20	799.1.025.1A	Fork return spring		1
21	0400.09.050	Shim th. 0.5		1
21	0765.92.205	Shim th. 0.2		2
22	884.5.034.1A	Ring		1
23	748.1.040.1A	Nut		1

NOTES NO.	CODE NO.	DESCRIPTION	VALIDITY	Q.TY
24	180.1.008.1A	Gearbox drum control fork		1
25	0660.13.165	Gearchange lever pin		1
26	821.1.001.1A	Pin with gearchange lever		1
27	0799.13.110	Gearchange lever return spring		1
28	771.5.067.8B	Screw		1
29	852.1.172.1A	Washer		1
30	771.5.123.8B	Screw		1
31	852.1.174.1A	Washer		1
32	881.1.012.1A	Centering ring		1
33	826.1.009.1A	Stopper plate		1
34	0400.29.125	Shim th. 0.2		2
34	0400.29.126	Shim th. 0.5		1

CATALOGUE No: 915.1.102.2E
ISSUED: 02 - 05

DRAWING 003 GEAR-BOX

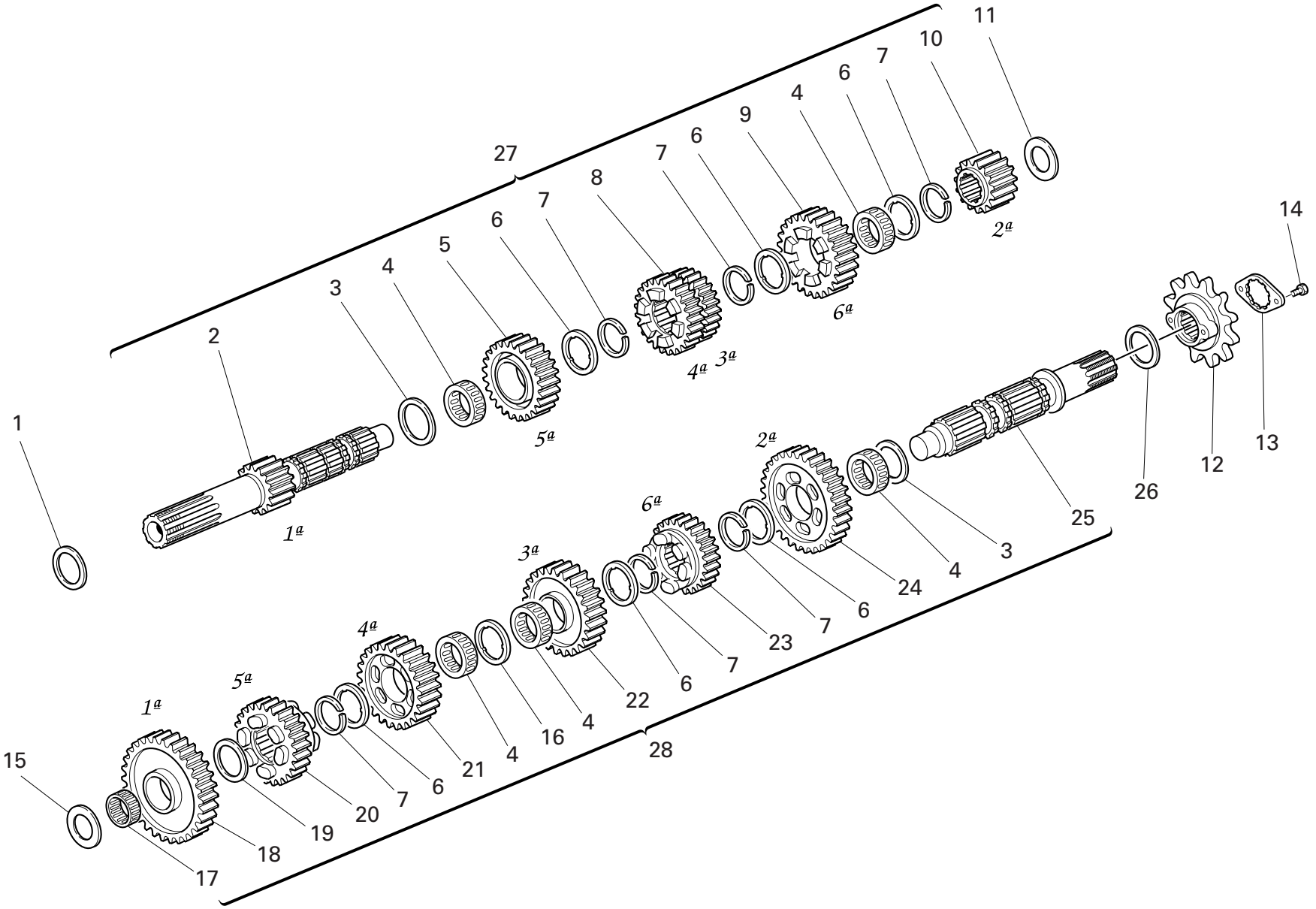

DRAWING 003 GEAR-BOX

NOTES NO.	CODE NO.	DESCRIPTION	VALIDITY	Q.TY
1	0251.47.050	Shim th. 1		1
1	0251.47.054	Shim th. 1.2		1
1	852.1.108.1AH	Shim th. 0.9		1
1	852.1.108.1AL	Shim th. 1,1		1
1	852.1.108.1AN	Shim th. 1,3		1
2	149.1.033.1A	Gearbox main shaft		1
3	0670.16.150	Shim th. 0.5		2
4	701.4.005.1A	Needle bearing		5
5	172.1.110.1A	Driving gear 5th sp.		1
6	856.1.001.1A	Grooved washer th. 0.5		6
7	0670.16.145	Snap ring		6
8	172.1.109.1A	Driving gear 3rd/4th sp.		1
9	172.1.111.1A	Driving gear 6th sp.		1
10	172.1.108.1A	Driving gear 2nd sp.		1
11	0670.16.163	Shim th. 1.8		1
11	0670.16.184	Shim th. 1		1
11	713.1.014.1A	Shim th. 1.5		1
11	713.1.014.1B	Shim th. 1.7		1
11	713.1.014.1E	Shim th. 1.6		1
11	713.1.014.1F	Shim th. 1.9		1
12	449.1.043.2A	Chain sprocket Z=15		1
13	826.1.011.1A	Sprocket keep plate		1
14	8A00.67997	Screw		2
15	0670.16.164	Shim th. 2		1
15	0670.16.165	Shim th. 2.2		1
15	0670.16.184	Shim th. 1		1
15	0670.16.185	Shim th. 1.2		1
15	713.1.011.1A	Shim th. 2.3		1
15	713.1.014.1A	Shim th. 1.5		1
15	713.1.014.1E	Shim th. 1.6		1
15	713.1.266.1A	Spacer th. 3,15		1
16	856.1.031.1A	Grooved washer th. 0.5		1
17	76402.0002	Needle bearing		1
18	172.1.112.1A	Driven gear 1st sp.		1
19	0670.16.155	Shim th. 1		1
20	172.1.116.1A	Driven gear 5th sp.		1
21	172.1.115.1A	Driven gear 4th sp.		1
22	172.1.114.1A	Driven gear 3rd sp.		1
23	172.1.117.1A	Driven gear 6th sp.		1
24	172.1.113.1A	Driven gear 2nd sp.		1
25	149.1.034.1A	Gearbox lay shaft		1
26	0670.16.170	Shim th. 0.8		1
26	0670.16.171	Shim th. 1		1
26	852.1.105.1AB	Shim th. 0.9		1
26	852.1.105.1AD	Shim th. 1,1		1
26	852.1.105.1AG	Shim th. 0.7		1
27	150.2.061.1A	Complete main shaft		1
28	150.2.062.1A	Gearbox lay shaft		1

CATALOGUE No: 915.1.102.2E
ISSUED: 02 - 05

DRAWING 004 CLUTCH

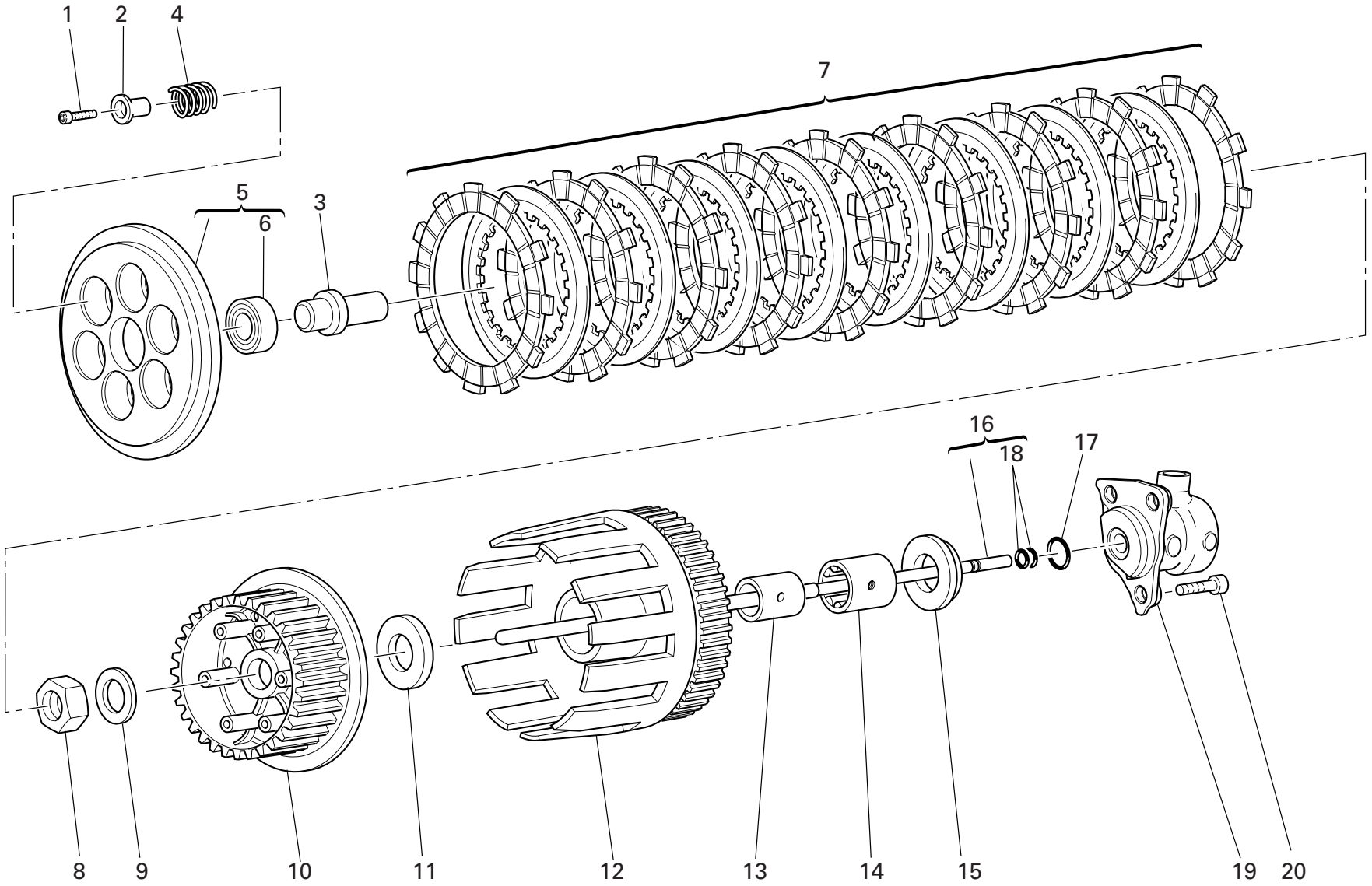

DRAWING 004 CLUTCH

NOTES NO.	CODE NO.	DESCRIPTION	VALIDITY	Q.TY
1	771.5.043.8B	Screw		6
2	841.1.031.1A	Retainer		6
3	818.1.010.1B	Clutch control pin		1
4	799.1.099.1A	Clutch spring		6
5	194.2.003.1A	Pressure plate		1
6	702.5.008.1A	Bearing		1
7	190.2.009.2B	Clutch plates set		1
8	750.1.007.1A	Nut		1
9	851.1.004.1A	Lock washer		1
10	196.1.016.3A	Clutch drum		1
11	856.1.014.1A	Shim		1
12	170.2.022.1C	Primary drive gears pair		1
13	881.1.026.1A	Inner ring		1
14	702.5.015.1A	Bearing		1
15	713.1.119.1A	Spacer		1
16	117.2.007.1A	Clutch control rod		1
17	886.4.043.1A	O-ring		1
18	93823.2018	O-ring		2
19	195.4.003.1A	Piston assembly		1
20	60N107335	Screw		3

NOTES NO.	CODE NO.	DESCRIPTION	VALIDITY	Q.TY

CATALOGUE No: 915.1.102.2E
ISSUED: 02 - 05

DRAWING 005 CLUTCH COVER

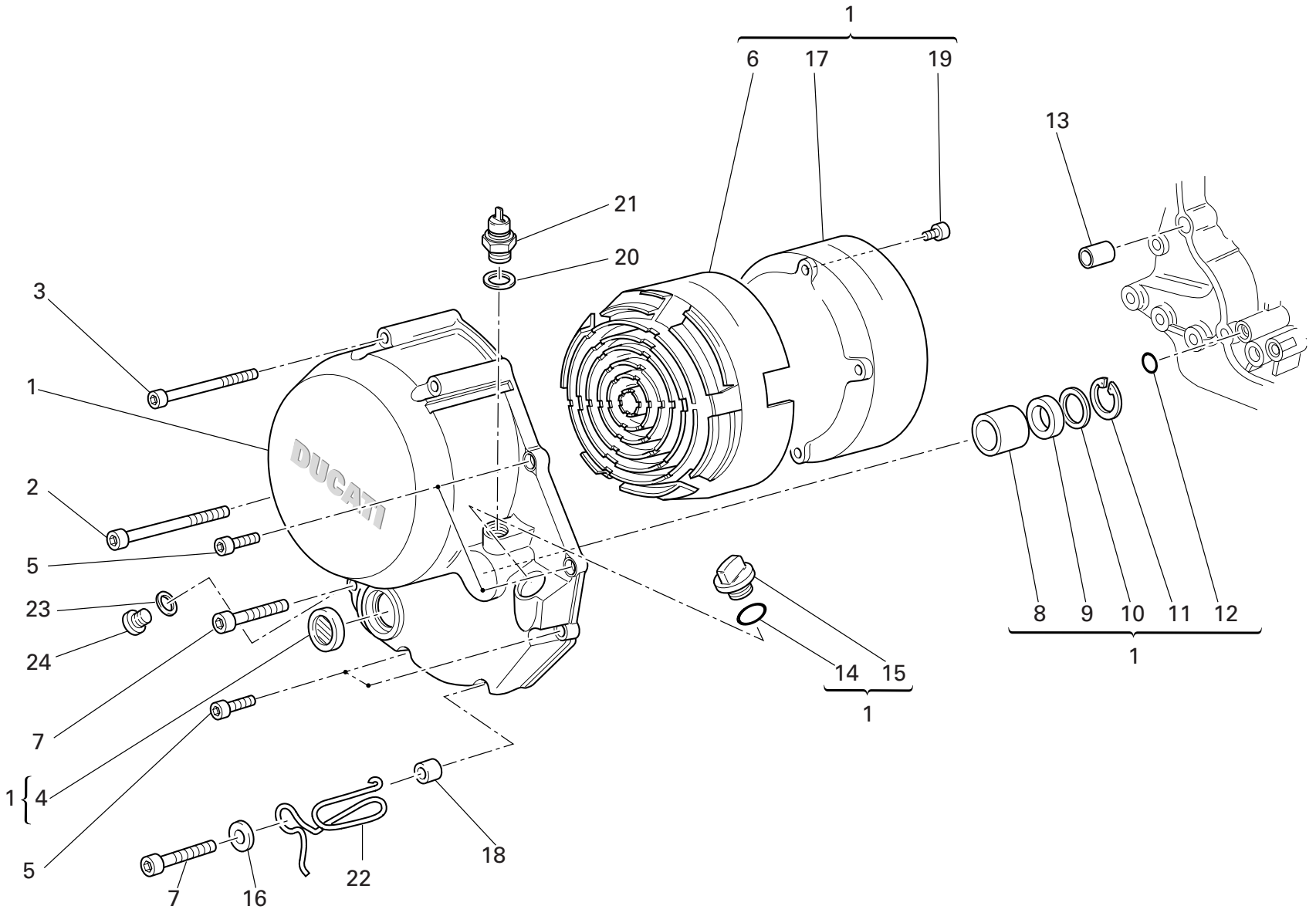

DRAWING 005 CLUTCH COVER

NOTES NO.	CODE NO.	DESCRIPTION	VALIDITY	Q.TY
1	243.2.028.3AC	Cover clutch side		1
2	771.5.083.8B	Screw		1
3	771.5.081.8B	Screw		3
4	254.4.001.1A	Oil level sight glass		1
5	771.5.069.8B	Screw		4
6	486.1.051.1A	Panel (BLACK)		1
7	771.5.072.8B	Screw		2
8	0665.49.680	Bush		1
9	93784.2030	Seal ring		1
10	852.1.008.1A	Shim th. 0.5		1
11	884.5.035.1A	Circlip		1
12	93827.0114	O-ring		1
13	0400.49.240	Locating bush		1
14	886.4.090.1A	O-ring		1
15	893.1.005.1A	Cap		1
16	852.1.176.1A	Washer		1
17	243.1.029.1A	Cover		1
18	713.1.241.1A	Spacer		1
19	773.1.001.1A	Screw		6
20	852.1.195.1A	Gasket th.2		1
21	539.4.030.1A	Switch		1
22	881.1.030.1A	Holder		1
23	852.5.024.1A	Gasket th.1		1
24	780.5.001.1A	Cap		1

CATALOGUE No: 915.1.102.2E
ISSUED: 02 - 05

DRAWING 006 CRANKSHAFT

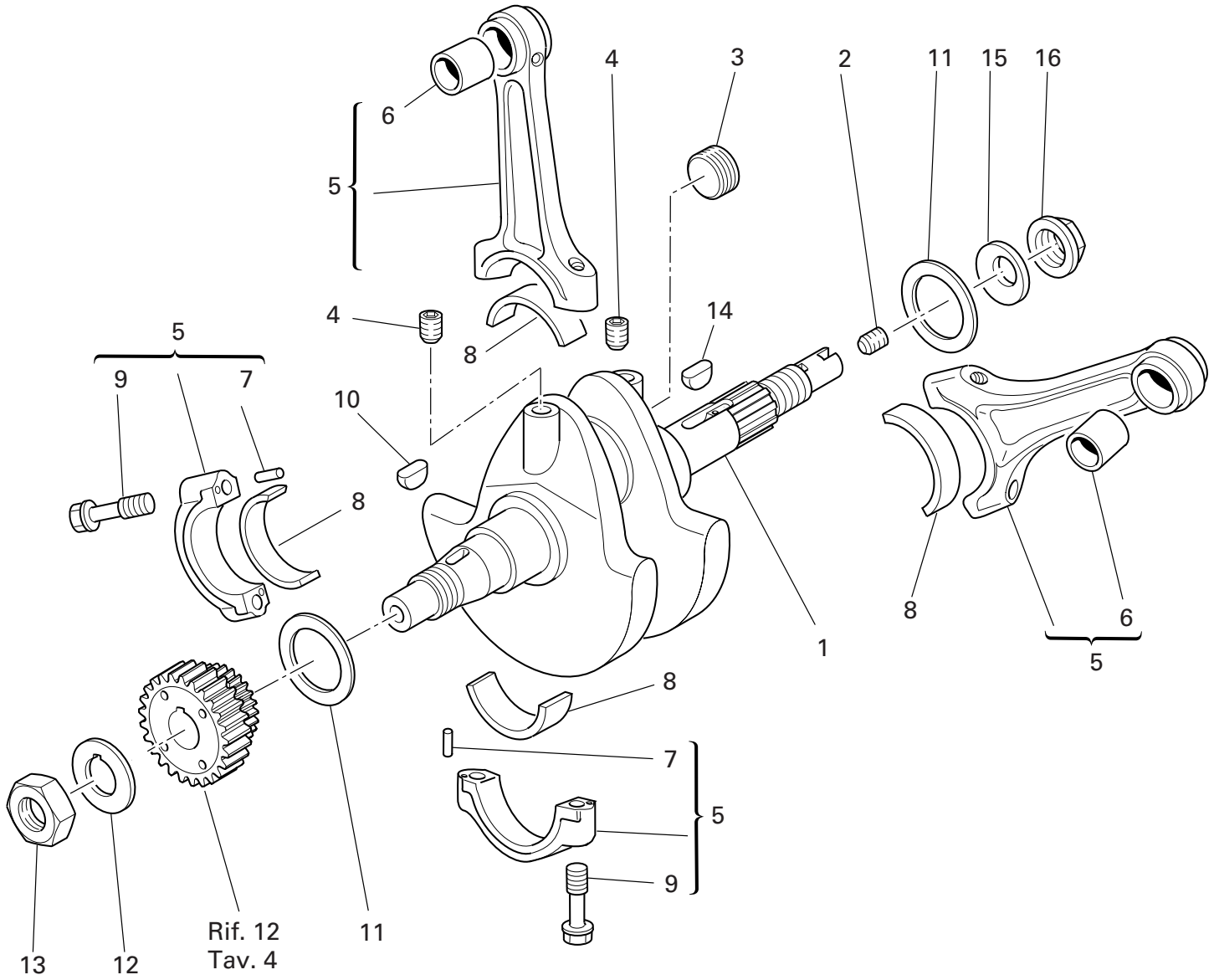

DRAWING 006 CRANKSHAFT

NOTES NO.	CODE NO.	DESCRIPTION	VALIDITY	Q.TY
1	146.2.092.1A	Crankshaft		1
2	779.1.109.1A	Special screw		1
3	780.1.015.1A	Cap		1
4	72121.2106	Threaded dowel		2
5	158.2.018.1A	Connecting rods pair		1
6	0660.47.290	Standard bush		2
7	74224.0570	Pin		4
8	0660.47.230	Standard half-bearing		4
9	779.1.007.2A	Special screw		4
10	74172.1008	Woodruff key		2
11	852.1.104.1A	Shim th. 1.9		2
11	852.1.104.1B	Shim th. 1.95		2
11	852.1.104.1C	Shim th. 2		2
11	852.1.104.1D	Shim th. 2,05		2
11	852.1.104.1E	Shim th. 2,1		2
11	852.1.104.1F	Shim th. 2,15		2
11	852.1.104.1G	Shim th. 2.2		2
11	852.1.104.1H	Shim th. 2.25		2
11	852.1.104.1I	Shim th. 2.3		2
11	852.1.104.1J	Shim th. 2.35		2
11	852.1.104.1K	Shim th. 2,4		2
11	852.1.104.1L	Shim th. 2,45		2
11	852.1.104.1M	Shim th. 2.5		2
11	852.1.104.1N	Shim th. 2.55		2
12	851.1.019.1A	Lock washer		1
13	0660.47.040	Nut		1
14	0755.29.025	Woodruff key		1
15	799.1.051.2A	Spring washer		1
16	750.1.012.2A	Nut		1

CATALOGUE No: 915.1.102.2E
ISSUED: 02 - 05

DRAWING 007 CYLINDERS - PISTONS

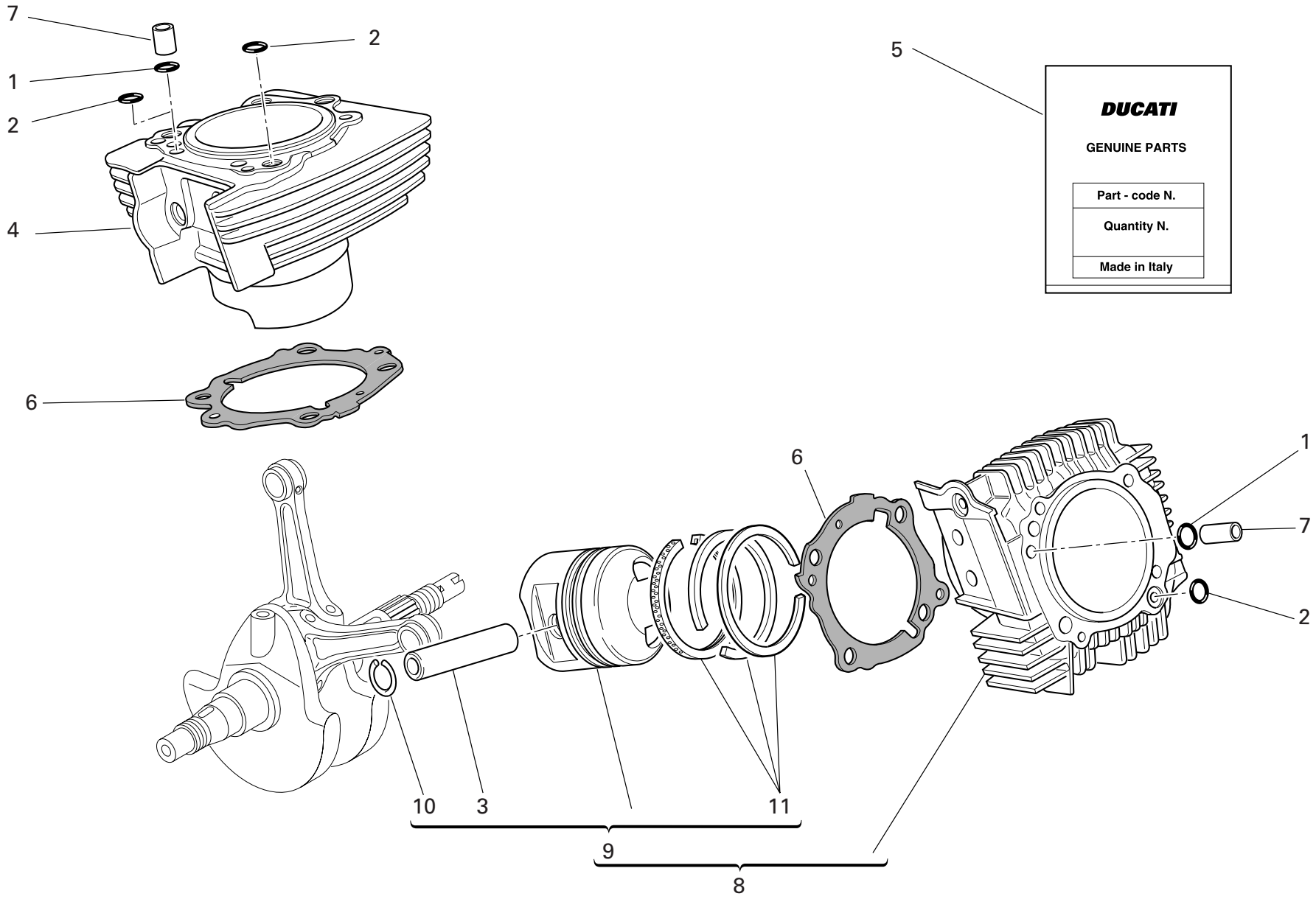

DRAWING 007 CYLINDERS - PISTONS

NOTES NO.	CODE NO.	DESCRIPTION	VALIDITY	Q.TY
1	0400.17.030	O-ring		2
2	463.2.019.6A	O-ring		3
3	0675.47.450	Piston pin		2
4	120.2.095.1A	Vertical cylinder-piston fit		1
5	791.2.034.1A	Head-cylinder gaskets set		1
6	786.1.095.1A	Cylinder-crankcase gasket th. 0.4		2
7	0805.17.125	Bush		2
8	120.2.096.1A	Horizontal cylinder-piston fit		1
9	122.2.119.1A	Complete piston		2
10	884.4.017.1A	Piston pin circlip		4
11	121.2.039.1A	Piston rings set		2

NOTES NO.	CODE NO.	DESCRIPTION	VALIDITY	Q.TY

CATALOGUE No: 915.1.102.2E
ISSUED: 02 - 05

DRAWING 008 TIMING

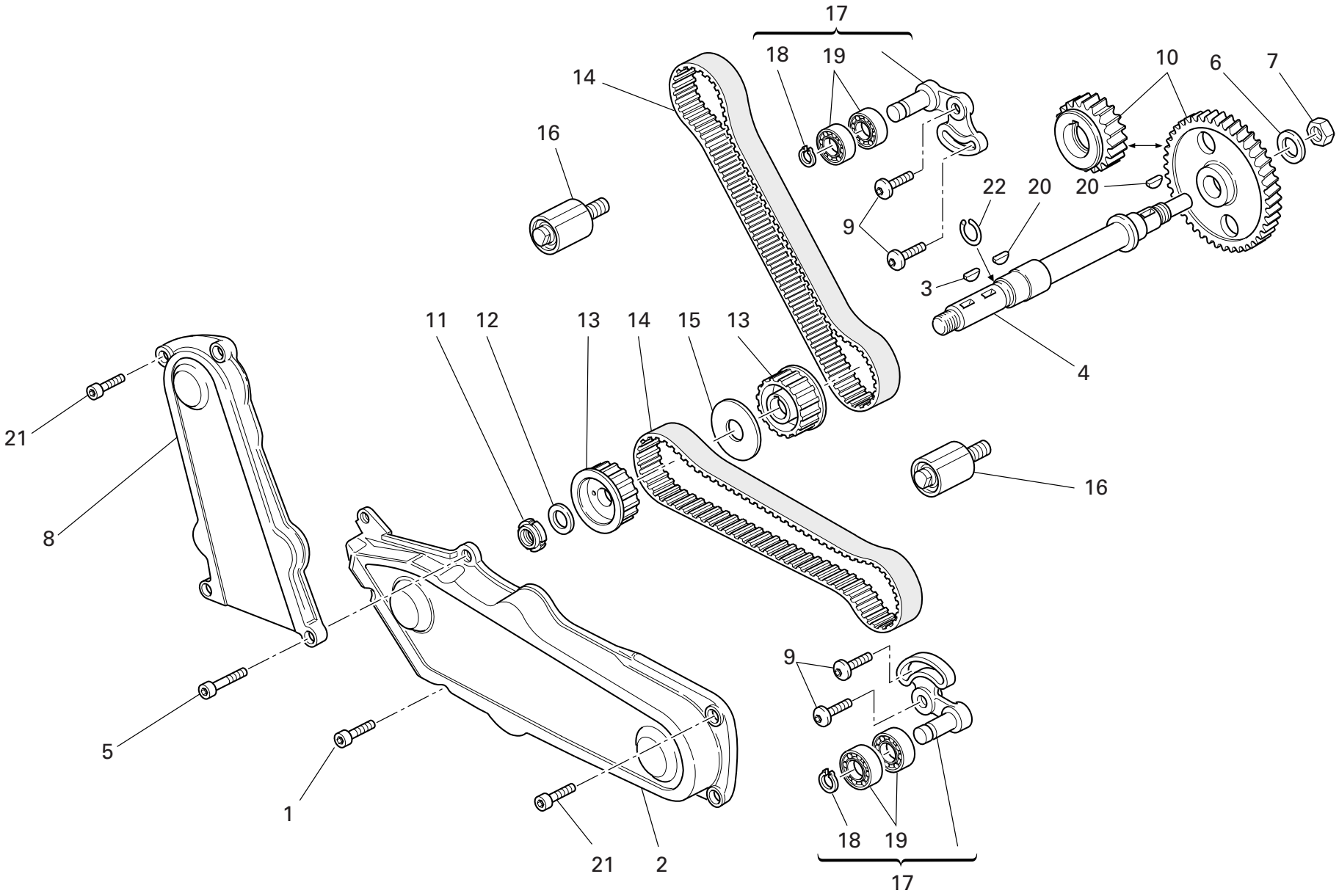

DRAWING 008 TIMING

NOTES NO.	CODE NO.	DESCRIPTION	VALIDITY	Q.TY
1	771.5.067.8B	Screw		1
2	245.1.047.1A	Horizontal timing belt cover		1
3	74172.1008	Woodruff key		1
4	147.1.015.1A	Lay shaft		1
5	771.5.069.8B	Screw		2
6	851.1.013.1A	Lock washer		1
7	0124.40.060	Hexagon nut		1
8	245.1.048.1A	Vertical timing belt cover		1
9	772.1.010.3A	Screw		4
10	171.2.020.2B	Timing gears pair		1
11	72944.1542	Elastic-stop ring nut		1
12	852.1.173.1A	Washer		1
13	255.1.001.1B	Timing belt roller		2
14	737.4.007.2A	Timing drive toothed belt		2
15	856.1.002.2A	Belt roller separating washer sp. 2		1
16	451.1.025.1A	Fixed tensioner assembly		2
17	451.2.017.1A	Complete vertical cylinder tensioner roller		2
18	884.5.034.1A	Ring		2
19	702.4.069.1A	Bearing		4
20	0755.29.025	Woodruff key		2
21	771.5.064.8B	Screw		4
22	882.1.003.1A	Snap ring		1

NOTES NO.	CODE NO.	DESCRIPTION	VALIDITY	Q.TY

CATALOGUE No: 915.1.102.2E
ISSUED: 02 - 05

DRAWING 009 FILTERS AND OIL PUMP

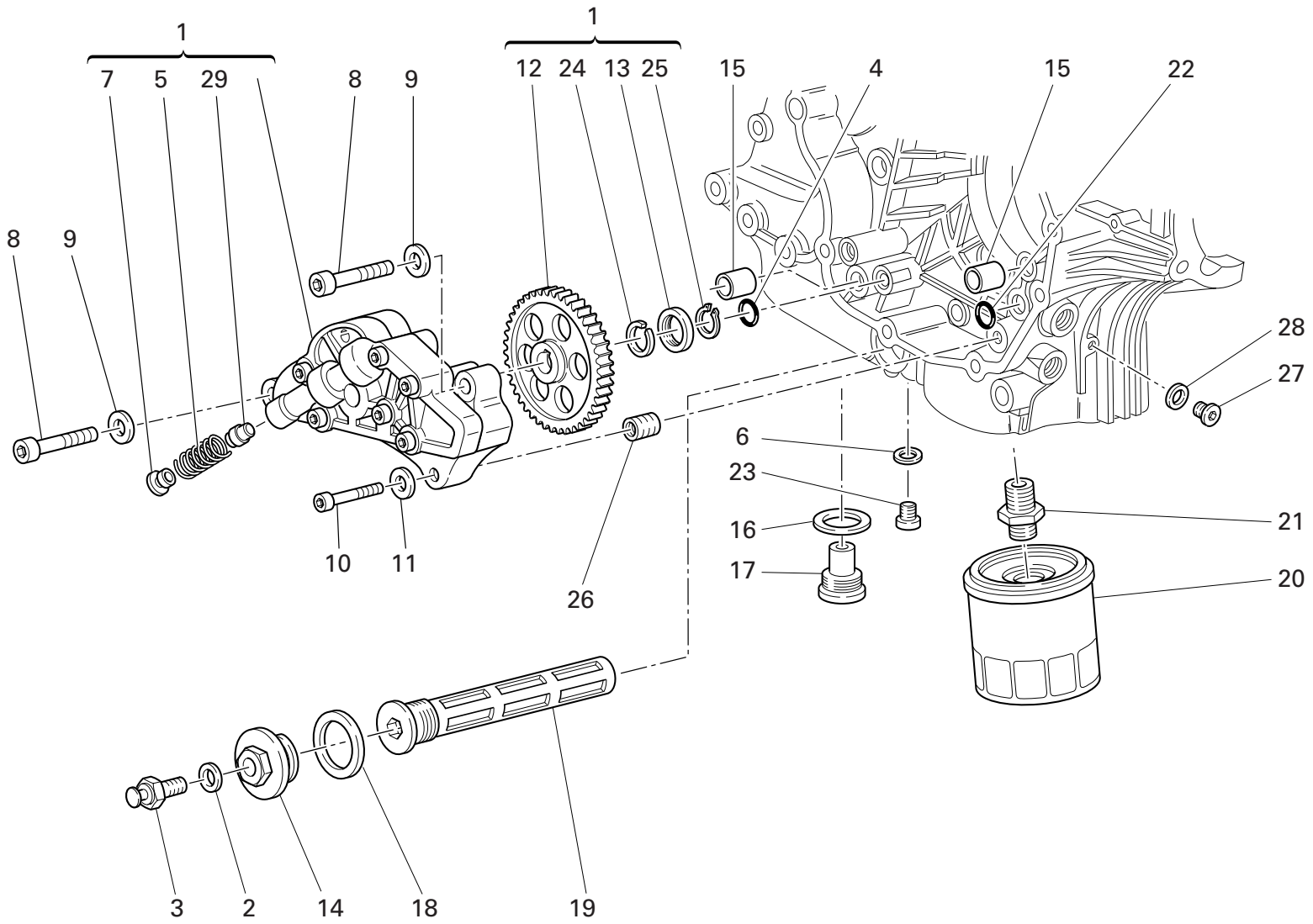

DRAWING 009 FILTERS AND OIL PUMP

NOTES NO.	CODE NO.	DESCRIPTION	VALIDITY	Q.TY
1	174.2.025.6A	Complete oil pump		1
2	852.5.024.1A	Gasket th.1		1
3	552.1.045.2A	Thermistor		1
4	886.4.037.1A	O-ring		1
5	799.1.055.1A	Bypass spring		1
6	852.1.120.1A	Aluminium gasket		1
7	780.1.018.1A	Bypass cap		1
8	771.5.129.8B	Screw		2
9	853.1.002.1A	Spring washer		2
10	771.5.069.8B	Screw		1
11	853.1.004.1A	Spring washer		1
12	174.1.025.2A	Pump drive gear		1
13	710.1.001.1A	Bush		1
14	873.1.039.1A	Cap		1
15	0759.49.280	Locating bush		2
16	220.3.208.3A	Gasket		1
17	780.2.047.1A	Oil drain plug with magnet		1
18	852.5.005.1A	Gasket th.1,5		1
19	894.2.009.1A	Oil filter		1
20	444.4.003.4A	Oil filter cartridge		1
21	815.1.028.1A	Nipple		1
22	93827.0114	O-ring		1
23	779.1.198.2A	Cap		1
24	884.4.042.1A	Snap ring		1
25	884.5.036.1A	Circlip		1
26	0670.49.310	Reduction bush		1
27	779.1.162.2A	Cap		1
28	852.1.195.1A	Gasket th.2		1
29	593.1.018.1A	Bypass valve		1

CATALOGUE No: 915.1.102.2E
ISSUED: 02 - 05

DRAWING 010 HALF CRANKCASES

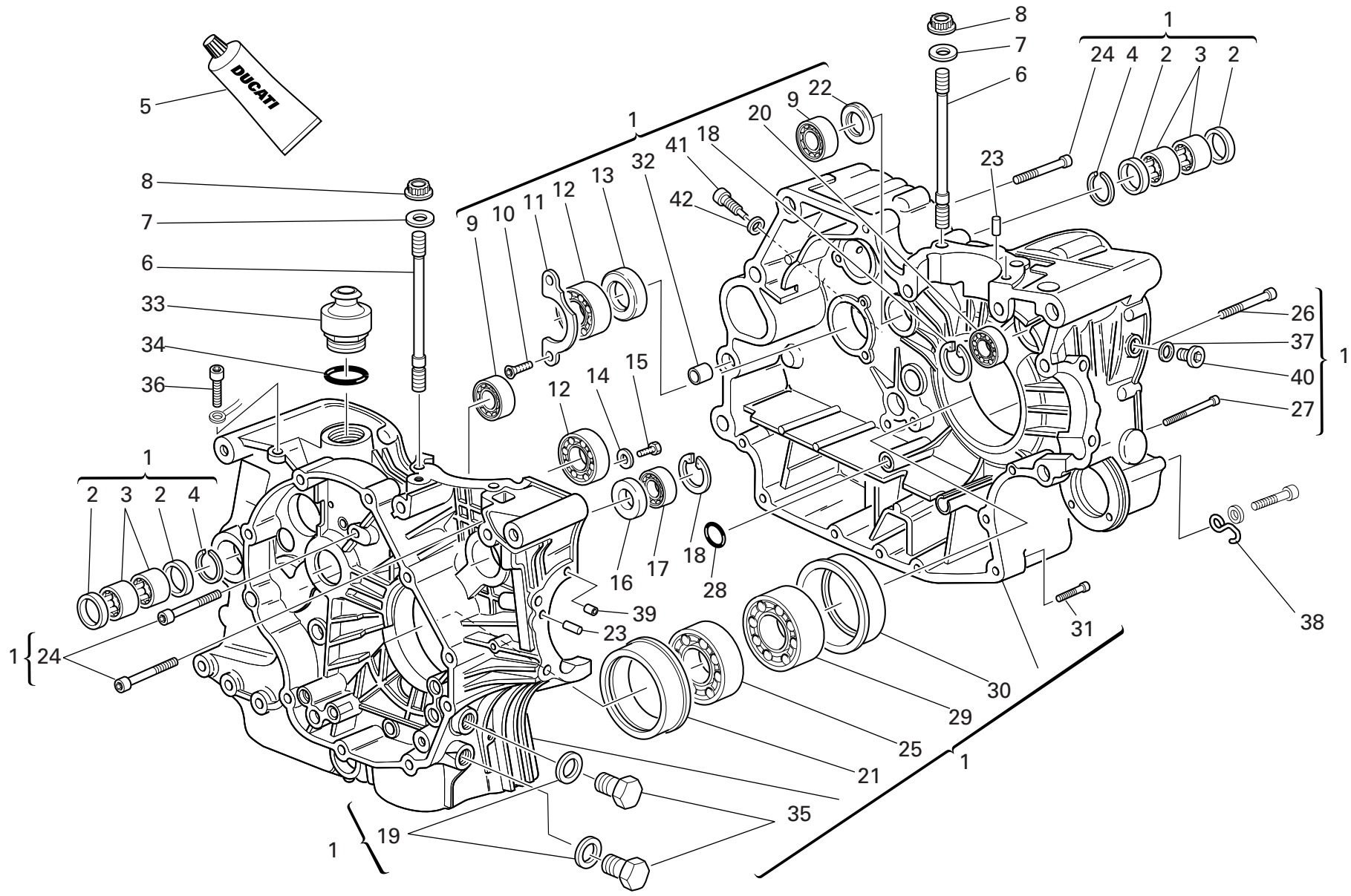

DRAWING 010 HALF CRANKCASES

NOTES NO.	CODE NO.	DESCRIPTION	VALIDITY	Q.TY
1	225.2.088.1A	Complete half-crankcases pair		1
2	0755.49.265	Seal ring		4
3	76400.0004	Needle bearing		4
4	76266.2668	Snap ring		2
5	94247.0014	Fluid sealant		1
6	766.1.048.1A	Stud bolt for fastening head cylinder		8
7	856.1.064.2A	Special washer		8
8	748.1.050.1A	Nut		8
9	702.4.040.1A	Bearing		2
10	72094.1616	Screw		2
11	0367.49.275	Keep plate		1
12	75120.2567	Bearing		2
13	0660.49.268	Seal ring		1
14	713.1.140.1A	Spacer		2
15	770.5.250.8B	Screw		2
16	93785.1830	Seal ring		1
17	75794.1542	Bearing		1
18	73503.3380	Circlip		2
19	787.1.011.1A	Aluminium gasket th.2		2
20	702.5.008.1A	Bearing		1
21	710.1.069.1A	Bearing holder bush		1
22	463.4.001.1A	Seal ring		1
23	860.1.004.1A	Locating dowel		2
24	771.5.136.8B	Screw		6
25	702.4.020.1A	Bearing		1
26	779.1.029.2A	Special screw		1
27	771.5.080.8B	Screw		1
28	93827.0114	O-ring		1
29	75191.3380	Bearing		1
30	710.1.070.1A	Bearing holder bush		1
31	771.5.072.8B	Screw		5
32	711.1.095.1A	Bush		2
33	593.1.003.1B	Breather valve		1
34	93823.3156	O-ring		1
35	780.1.037.1A	Cap		2
36	779.1.182.2A	Special screw		1
37	852.5.026.1A	Aluminium gasket th.1,5		1
38	829.1.134.1A	Ring		1
39	711.1.128.1A	Bush		2
40	779.1.026.2A	Screw		1
41	779.1.296.2A	Special screw		1
42	852.5.025.1A	Aluminium gasket th.1		1

CATALOGUE No: 915.1.102.2E
ISSUED: 02 - 05

DRAWING 011 ALTERNATOR COVER

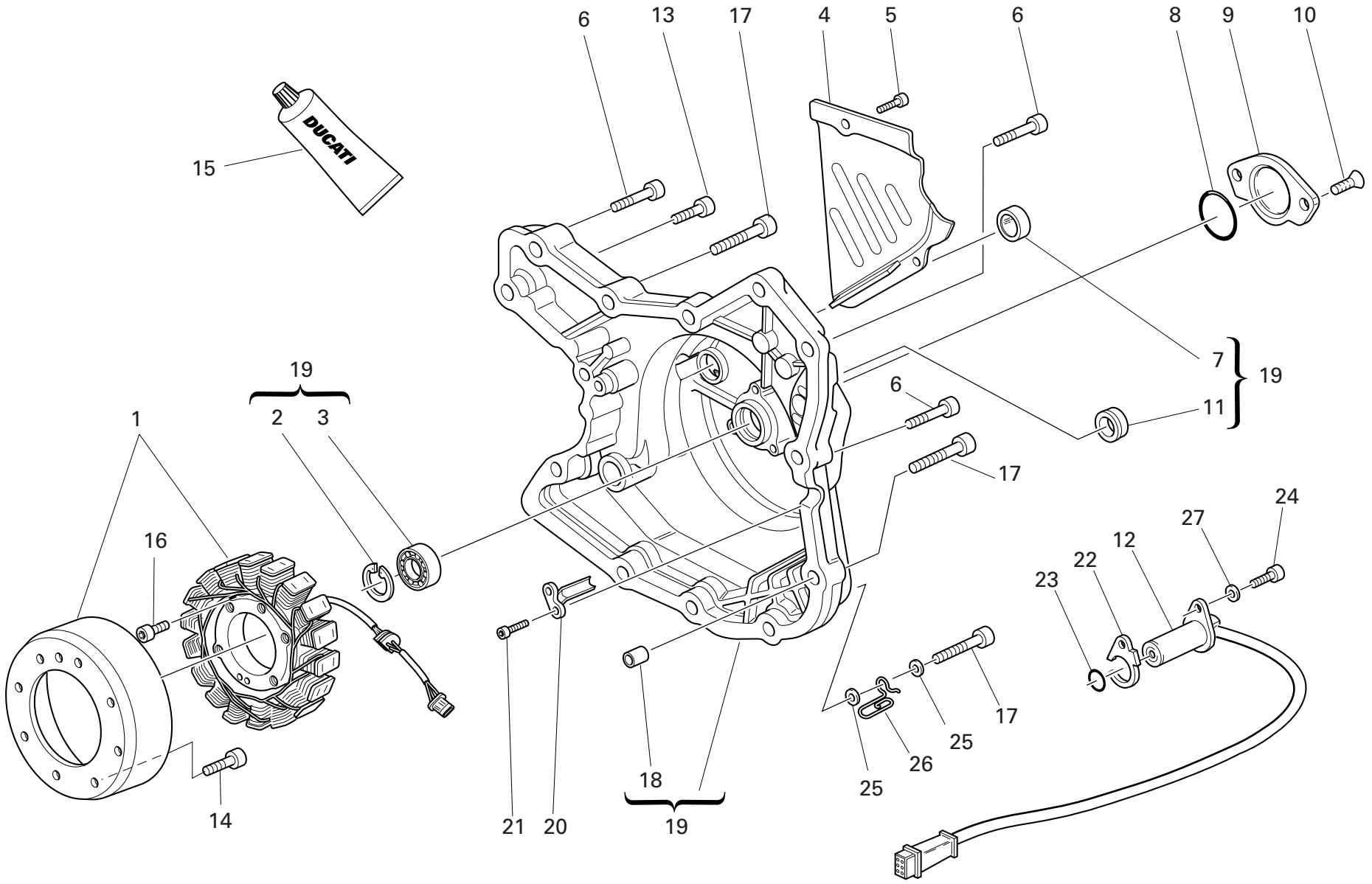

DRAWING 011 ALTERNATOR COVER

NOTES NO.	CODE NO.	DESCRIPTION	VALIDITY	Q.TY
1	264.4.014.3B	Generator "DENSO"		1
2	73503.3380	Circlip		1
3	702.5.008.1A	Bearing		1
4	247.1.083.1AE	Chain cover		1
5	771.5.064.2B	Screw		2
6	771.5.069.8B	Screw		9
7	254.1.001.1A	Oil level sight glass		1
8	886.4.035.1A	O-ring		1
9	247.1.002.1BC	Cover		1
10	777.5.049.8B	Screw		2
11	93783.1524	Seal ring		1
12	552.4.020.1A	Sensor		1
13	771.5.067.8B	Screw		2
14	779.4.075.1A	Screw		8
15	94247.0014	Fluid sealant		1
16	771.5.073.8B	Screw		3
17	771.5.071.8B	Screw		3
18	0400.49.240	Locating bush		2
19	242.2.045.2A	Generator cover		1
20	830.1.144.1A	Bracket		1
21	771.5.040.8B	Screw		2
22	788.1.076.1A	Gasket th.0,6		1
22	788.1.076.1AA	Gasket th.0,8		1
22	788.1.076.1AB	Gasket th.1,0		1
23	886.4.033.1A	O-ring		1
24	771.5.066.8B	Screw		1
25	734306N01	Washer		2
26	881.1.030.1A	Holder		1
27	853.1.003.1A	Spring washer		1

CATALOGUE No: 915.1.102.2E
ISSUED: 02 - 05

DRAWING 012 ELECTRIC STARTER AND IGNITION

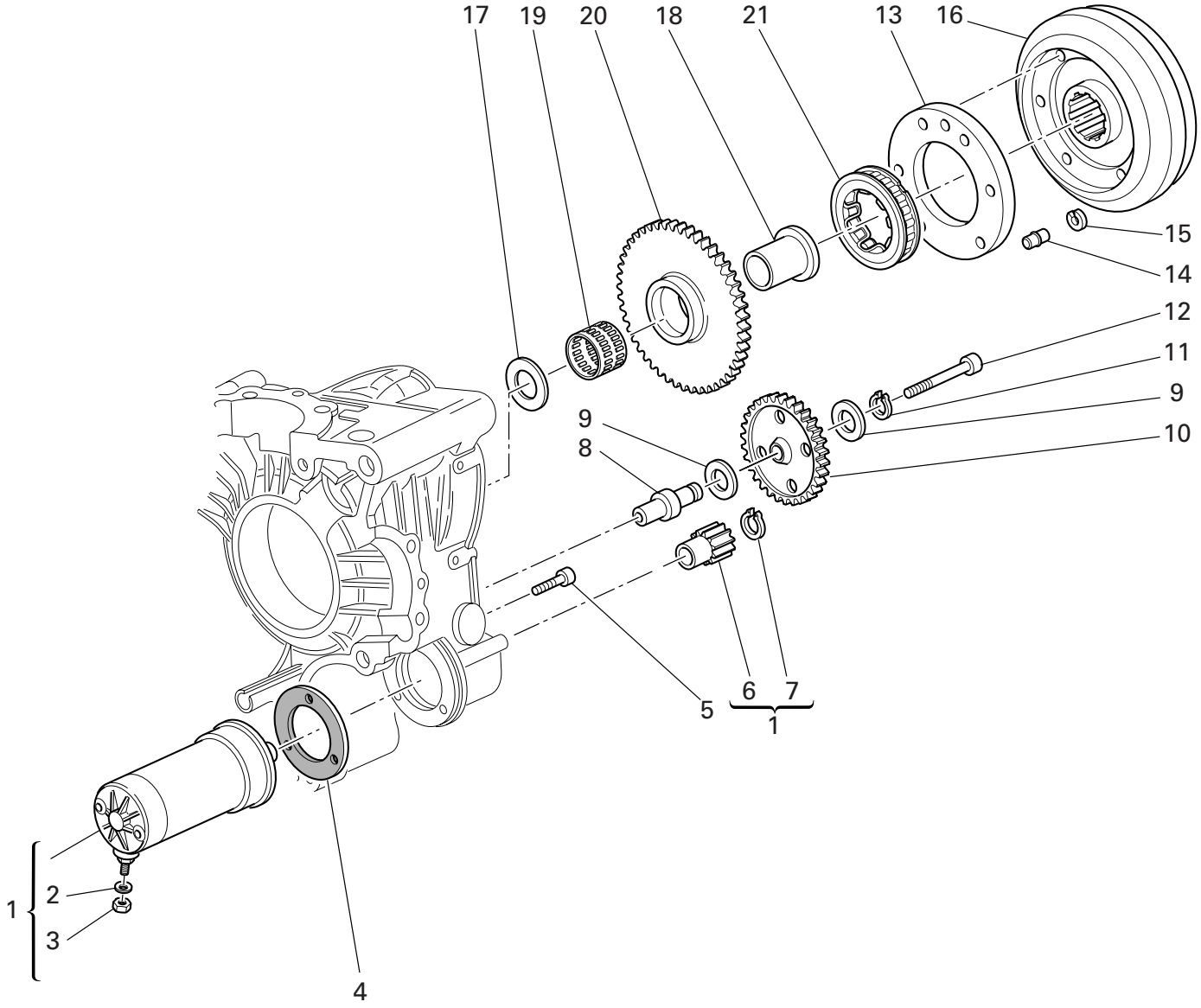

DRAWING 012 ELECTRIC STARTER AND IGNITION

NOTES NO.	CODE NO.	DESCRIPTION	VALIDITY	Q.TY
1	270.4.001.1A	Complete starter motor (8-9 included)		1
2	853.1.003.1A	Spring washer		1
3	750.1.121.1A	Nut		1
4	788.1.054.1A	Starter motor gasket		1
5	771.5.069.8B	Screw		2
6	176.1.001.1A	Starter motor sprocket		1
7	884.5.036.1A	Circlip		1
8	0660.50.020	Intermediate gear pin		1
9	856.1.071.1A	Washer		2
10	176.1.009.1A	Intermediate gear assembly		1
11	73500.1440	Circlip		1
12	771.5.078.8B	Screw		1
13	160.1.057.1A	Flange		1
14	863.1.002.1A	Locating pin		1
15	882.1.012.1A	Check ring		1
16	276.1.025.1B	Ignition flywheel		1
17	0619.50.065	Washer		1
18	881.1.010.1C	Inner ring		1
19	701.4.003.1A	Needle bearing		1
20	173.1.012.3A	Electric starter driven gear		1
21	701.4.007.1A	Starter clutch		1

NOTES NO.	CODE NO.	DESCRIPTION	VALIDITY	Q.TY

CATALOGUE No: 915.1.102.2E
ISSUED: 02 - 05

DRAWING 013 HEAD : TIMING

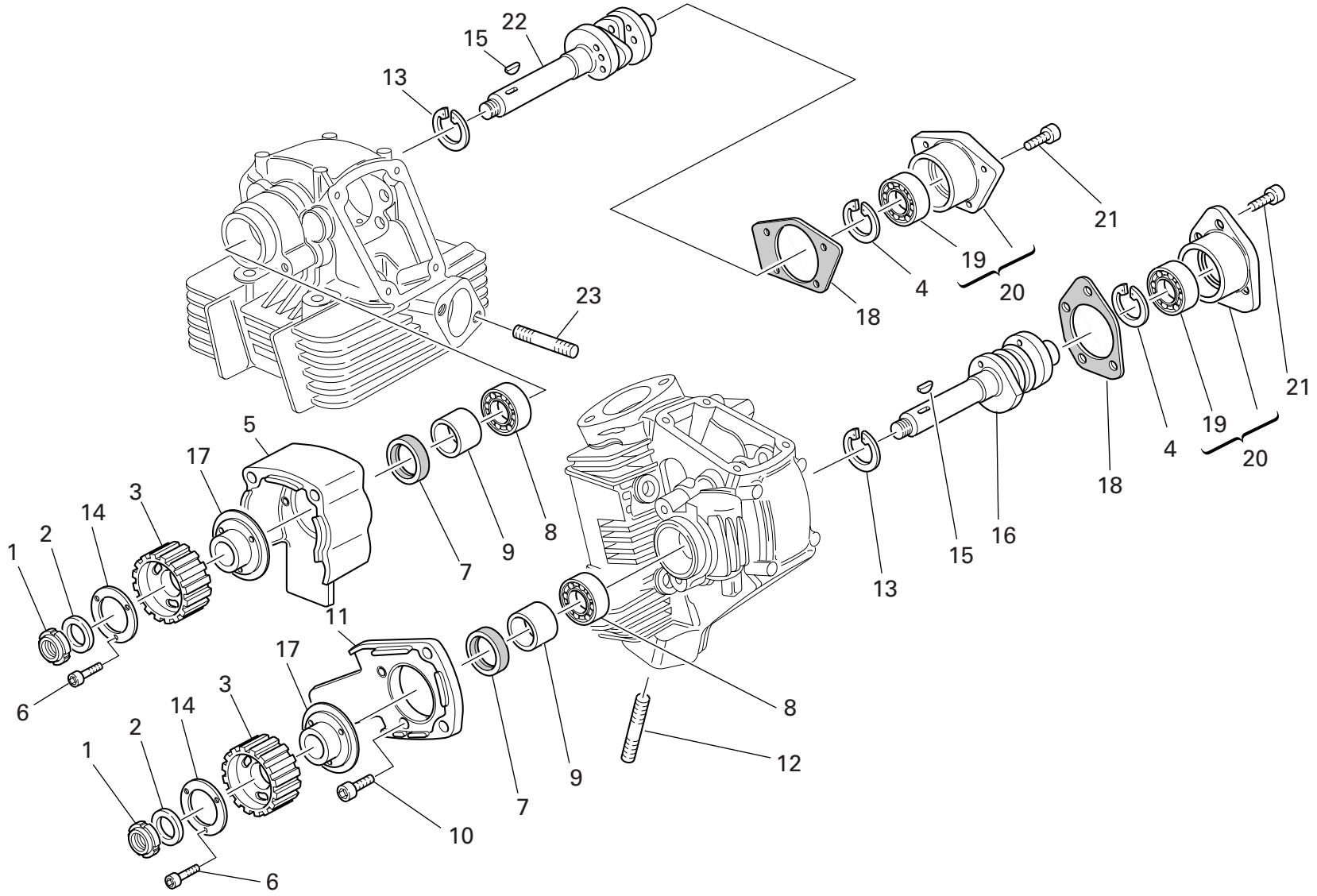

DRAWING 013 HEAD : TIMING

NOTES NO.	CODE NO.	DESCRIPTION	VALIDITY	Q.TY
1	72944.1542	Elastic-stop ring nut		2
2	852.1.173.1A	Washer		2
3	255.1.014.1A	Timing belt roller		2
4	73503.3380	Circlip		2
5	235.1.027.1A	Vertical rubber cap		1
6	771.5.040.8B	Screw		6
7	0204.70.105	Seal ring		2
8	75120.1747	Bearing		2
9	713.1.007.1A	Belt roller spacer		2
10	771.5.065.8B	Screw		4
11	235.1.026.1A	Horizontal rubber cap		1
12	766.4.017.2A	Stud bolt		4
13	73503.3683	Circlip		2
14	852.1.124.2A	Special washer		2
15	74172.1008	Woodruff key		2
16	148.1.147.1A	Horizontal head camshaft		1
17	160.1.076.1A	Flange		2
18	0660.92.310	Cap gasket		2
19	75173.1542	Bearing		2
20	235.2.031.1A	Cap with bearing		2
21	771.5.066.8B	Screw		7
22	148.1.146.1A	Vertical head camshaft		1
23	766.4.018.1A	Stud bolt		4

NOTES NO.	CODE NO.	DESCRIPTION	VALIDITY	Q.TY

CATALOGUE No: 915.1.102.2E
ISSUED: 02 - 05

DRAWING 014 VERTICAL HEAD

17 * Scodellino ritorno
Return cap
Coupelle retour
Einstellhülse

0727.92.050 — 5	0727.92.171 — 7,15	0727.92.093 — 9,30
0727.92.150 — 5,05	0727.92.072 — 7,20	0727.92.193 — 9,35
0727.92.051 — 5,10	0727.92.172 — 7,25	0727.92.094 — 9,40
0727.92.151 — 5,15	0727.92.073 — 7,30	0727.92.194 — 9,45
0727.92.052 — 5,20	0727.92.173 — 7,35	0727.92.095 — 9,50
0727.92.152 — 5,25	0727.92.074 — 7,40	0727.92.195 — 9,55
0727.92.053 — 5,30	0727.92.174 — 7,45	0727.92.096 — 9,60
0727.92.153 — 5,35	0727.92.075 — 7,50	
0727.92.054 — 5,40	0727.92.175 — 7,55	
0727.92.154 — 5,45	0727.92.076 — 7,60	
0727.92.055 — 5,50	0727.92.176 — 7,65	
0727.92.155 — 5,55	0727.92.077 — 7,70	
0727.92.056 — 5,60	0727.92.177 — 7,75	
0727.92.156 — 5,65	0727.92.078 — 7,80	
0727.92.057 — 5,70	0727.92.178 — 7,85	
0727.92.157 — 5,75	0727.92.079 — 7,90	
0727.92.058 — 5,80	0727.92.179 — 7,95	
0727.92.158 — 5,85	0727.92.080 — 8	
0727.92.059 — 5,90	0727.92.180 — 8,05	
0727.92.159 — 5,95	0727.92.081 — 8,10	
0727.92.060 — 6	0727.92.181 — 8,15	
0727.92.160 — 6,05	0727.92.082 — 8,20	
0727.92.061 — 6,10	0727.92.182 — 8,25	
0727.92.161 — 6,15	0727.92.083 — 8,30	
0727.92.062 — 6,20	0727.92.183 — 8,35	
0727.92.162 — 6,25	0727.92.084 — 8,40	
0727.92.063 — 6,30	0727.92.184 — 8,45	
0727.92.163 — 6,35	0727.92.085 — 8,50	
0727.92.064 — 6,40	0727.92.185 — 8,55	
0727.92.164 — 6,45	0727.92.086 — 8,60	
0727.92.065 — 6,50	0727.92.186 — 8,65	
0727.92.165 — 6,55	0727.92.087 — 8,70	
0727.92.066 — 6,60	0727.92.187 — 8,75	
0727.92.166 — 6,65	0727.92.088 — 8,80	
0727.92.067 — 6,70	0727.92.188 — 8,85	
0727.92.167 — 6,75	0727.92.089 — 8,90	
0727.92.068 — 6,80	0727.92.189 — 8,95	
0727.92.168 — 6,85	0727.92.090 — 9	
0727.92.069 — 6,90	0727.92.190 — 9,05	
0727.92.169 — 6,95	0727.92.091 — 9,10	
0727.92.070 — 7	0727.92.191 — 9,15	
0727.92.170 — 7,05	0727.92.092 — 9,20	
0727.92.071 — 7,10	0727.92.192 — 9,25	

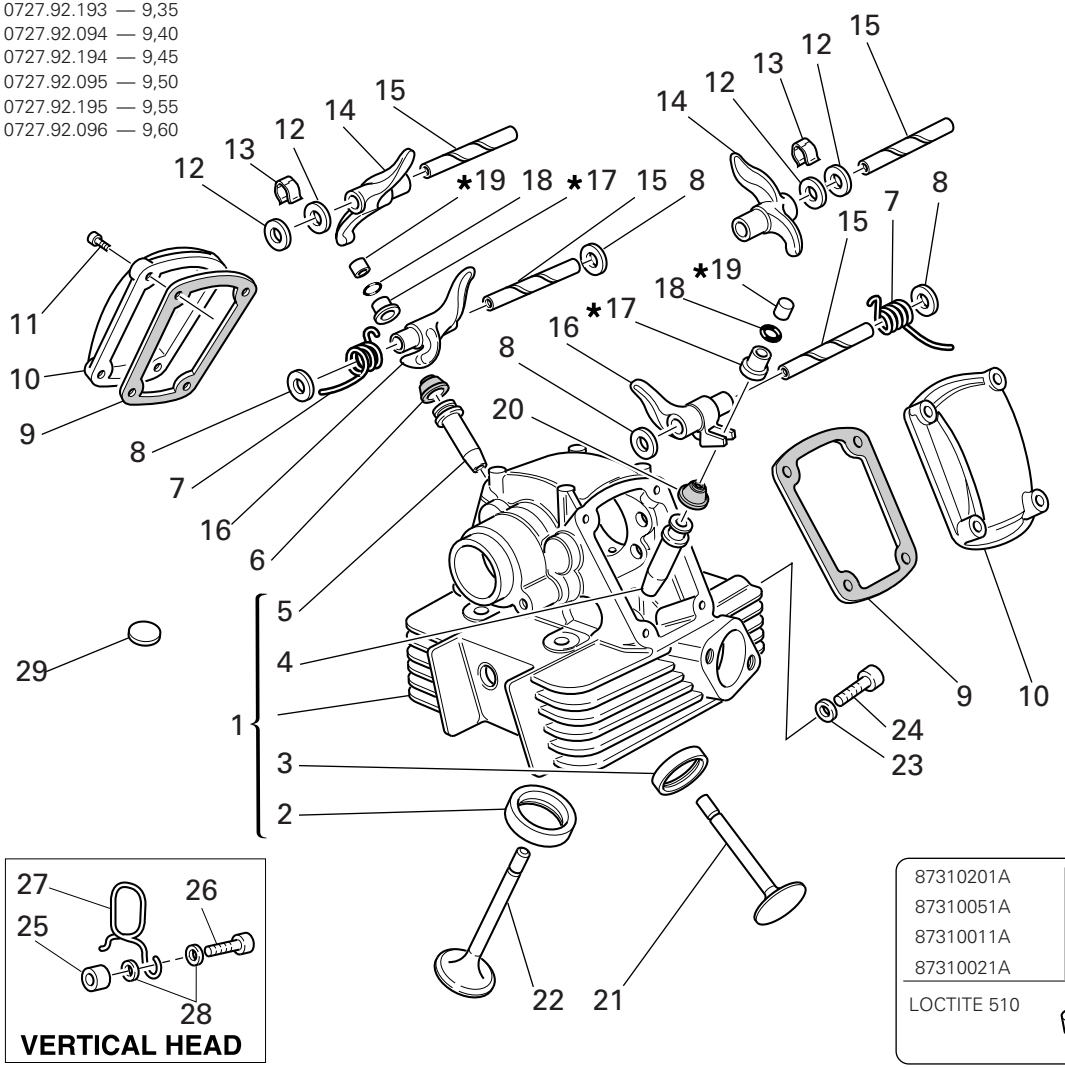

87310201A	20
87310051A	18
87310011A	16
87310021A	10
LOCTITE 510	

19 * Registro bilanciere
Adjustment
Réglage
Ventilkäppchen

0723.92.500 — 2	0723.92.515 — 3,50
0723.92.535 — 2,05	0723.92.695 — 3,55
0723.92.501 — 2,10	0723.92.516 — 3,60
0723.92.545 — 2,15	0723.92.705 — 3,65
0723.92.502 — 2,20	0723.92.517 — 3,70
0723.92.555 — 2,25	0723.92.715 — 3,75
0723.92.503 — 2,30	0723.92.518 — 3,80
0723.92.565 — 2,35	0723.92.725 — 3,85
0723.92.504 — 2,40	0723.92.519 — 3,90
0723.92.575 — 2,45	0723.92.735 — 3,95
0723.92.505 — 2,50	0723.92.520 — 4
0723.92.585 — 2,55	0723.92.745 — 4,05
0723.92.506 — 2,60	0723.92.521 — 4,10
0723.92.595 — 2,65	0723.92.531 — 4,15
0723.92.507 — 2,70	0723.92.522 — 4,20
0723.92.605 — 2,75	0723.92.533 — 4,25
0723.92.508 — 2,80	0723.92.523 — 4,30
0723.92.615 — 2,85	0723.92.534 — 4,35
0723.92.509 — 2,90	0723.92.524 — 4,40
0723.92.625 — 2,95	0723.92.537 — 4,45
0723.92.510 — 3	0723.92.525 — 4,50
0723.92.635 — 3,05	0723.92.538 — 4,55
0723.92.511 — 3,10	0723.92.526 — 4,60
0723.92.645 — 3,15	0723.92.539 — 4,65
0723.92.512 — 3,20	0723.92.527 — 4,70
0723.92.655 — 3,25	0723.92.540 — 4,75
0723.92.513 — 3,30	0723.92.528 — 4,80
0723.92.675 — 3,35	0723.92.541 — 4,85
0723.92.514 — 3,40	0723.92.529 — 4,90
0723.92.685 — 3,45	0723.92.542 — 4,95
	0723.92.530 — 5
	0723.92.543 — 5,05
	0723.92.544 — 5,10
	0723.92.546 — 5,15
	0723.92.547 — 5,20
	0723.92.548 — 5,25
	0723.92.549 — 5,30
	0723.92.550 — 5,35
	0723.92.551 — 5,40
	0723.92.552 — 5,45
	0723.92.553 — 5,50
	0723.92.554 — 5,55
	0723.92.556 — 5,60

DRAWING 014 VERTICAL HEAD

NOTES NO.	CODE NO.	DESCRIPTION	VALIDITY	Q.TY
1	301.2.173.1A	Complete vertical head		1
2	304.1.024.1A	Intake valve seat		1
2	304.1.024.1AB	Oversize intake valve seat 0.03		1
2	304.1.024.1AC	Oversize intake valve seat 0.06		1
3	304.1.025.1A	Exhaust valve seat		1
3	304.1.025.1AB	Oversize exhaust valve seat 0.03		1
3	304.1.025.1AC	Oversize exhaust valve seat 0.06		1
4	303.1.003.1A	Intake valve cast iron guide		1
4	303.1.003.1AB	Oversize valve guide 0.03		1
4	303.1.003.1AC	Oversize valve guide 0.06		1
4	303.1.003.1AD	Oversize valve guide 0.09		1
5	0370.92.390	Exhaust valve bronze guide		1
5	0370.92.395	Oversize valve guide 0.03		1
5	0370.92.396	Oversize valve guide 0.06		1
5	0370.92.397	Oversize valve guide 0.09		1
6	764.1.013.1A	Valve seal		1
7	799.1.061.1A	Closing rocker spring		2
8	0619.92.180	Shim th. 0.3		6
8	0670.92.190	Shim th. 2		4
8	0765.92.185	Shim th. 1		2
8	0765.92.190	Shim th. 0.5		4
8	0765.92.205	Shim th. 0.2		8
9	788.1.032.2A	Valve cover gasket		2
10	240.1.010.1AB	Valve cover		2
11	771.5.067.8B	Screw		4
12	0647.70.010	Shim		4
13	0375.92.210	Spring		2
14	208.1.012.4A	Opening rocker		2
15	821.1.115.1A	Rocker shaft		4
16	209.1.012.4A	Closing rocker		2
17	0727.92.239	See table		2
18	669.1.003.1A	Split rings		4
19	0723.92.239	See table		2
20	764.1.009.1A	Valve seal		1
21	211.1.051.1A	Exhaust valve		1
22	210.1.056.1A	Intake valve		1
23	852.5.023.1A	Gasket		1
24	779.1.133.1A	Screw		1
25	713.1.241.1A	Spacer		1
26	771.5.069.8B	Screw		1
27	829.1.358.1A	Holder		1
28	852.1.176.1A	Washer		2
29	700.1.027.1A	Vibration damper pad		20

CATALOGUE No: 915.1.102.2E
ISSUED: 02 - 05

DRAWING 015 HORIZONTAL HEAD

14* Scodellino ritorno
Return cap
Coupelle retour
Einstellhülse

0727.92.050	5	0727.92.073	7,30	0727.92.096	9,60
0727.92.150	5,05	0727.92.173	7,35		
0727.92.051	5,10	0727.92.074	7,40		
0727.92.151	5,15	0727.92.174	7,45		
0727.92.052	5,20	0727.92.075	7,50		
0727.92.152	5,25	0727.92.175	7,55		
0727.92.053	5,30	0727.92.076	7,60		
0727.92.153	5,35	0727.92.176	7,65		
0727.92.054	5,40	0727.92.077	7,70		
0727.92.154	5,45	0727.92.177	7,75		
0727.92.055	5,50	0727.92.078	7,80		
0727.92.155	5,55	0727.92.178	7,85		
0727.92.056	5,60	0727.92.079	7,90		
0727.92.156	5,65	0727.92.179	7,95		
0727.92.057	5,70	0727.92.080	8		
0727.92.157	5,75	0727.92.180	8,05		
0727.92.058	5,80	0727.92.081	8,10		
0727.92.158	5,85	0727.92.181	8,15		
0727.92.059	5,90	0727.92.082	8,20		
0727.92.159	5,95	0727.92.182	8,25		
0727.92.060	6	0727.92.083	8,30		
0727.92.160	6,05	0727.92.183	8,35		
0727.92.061	6,10	0727.92.084	8,40		
0727.92.161	6,15	0727.92.184	8,45		
0727.92.062	6,20	0727.92.085	8,50		
0727.92.162	6,25	0727.92.185	8,55		
0727.92.063	6,30	0727.92.086	8,60		
0727.92.163	6,35	0727.92.186	8,65		
0727.92.064	6,40	0727.92.087	8,70		
0727.92.164	6,45	0727.92.187	8,75		
0727.92.065	6,50	0727.92.088	8,80		
0727.92.165	6,55	0727.92.188	8,85		
0727.92.066	6,60	0727.92.089	8,90		
0727.92.166	6,65	0727.92.189	8,95		
0727.92.067	6,70	0727.92.090	9		
0727.92.167	6,75	0727.92.190	9,05		
0727.92.068	6,80	0727.92.091	9,10		
0727.92.168	6,85	0727.92.191	9,15		
0727.92.069	6,90	0727.92.092	9,20		
0727.92.169	6,95	0727.92.192	9,25		
0727.92.070	7	0727.92.192	9,25		
0727.92.170	7,05	0727.92.093	9,30		
0727.92.071	7,10	0727.92.193	9,35		
0727.92.171	7,15	0727.92.194	9,45		
0727.92.072	7,20	0727.92.095	9,50		
0727.92.172	7,25	0727.92.195	9,55		

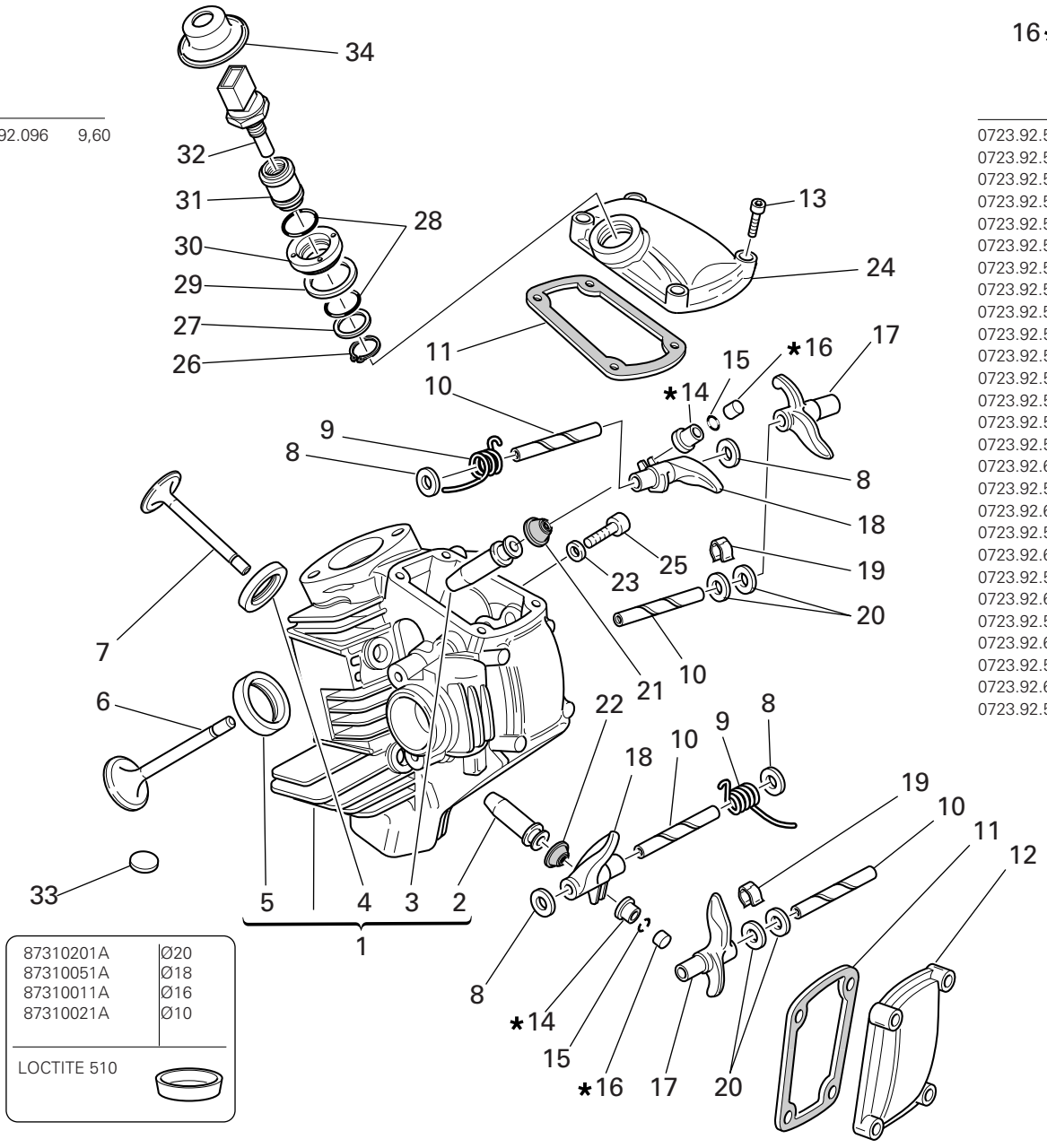

87310201A	Ø20
87310051A	Ø18
87310011A	Ø16
87310021A	Ø10
LOCTITE 510	

16* Registro bilanciere
Adjustment

Ventilkäppchen

0723.92.500	2	0723.92.675	3,35
0723.92.535	2,05	0723.92.514	3,40
0723.92.501	2,10	0723.92.685	3,45
0723.92.545	2,15	0723.92.515	3,50
0723.92.502	2,20	0723.92.695	3,55
0723.92.555	2,25	0723.92.516	3,60
0723.92.503	2,30	0723.92.705	3,65
0723.92.565	2,35	0723.92.517	3,70
0723.92.504	2,40	0723.92.715	3,75
0723.92.575	2,45	0723.92.518	3,80
0723.92.505	2,50	0723.92.725	3,85
0723.92.585	2,55	0723.92.519	3,90
0723.92.506	2,60	0723.92.735	3,95
0723.92.595	2,65	0723.92.520	4
0723.92.507	2,70	0723.92.745	4,05
0723.92.605	2,75	0723.92.521	4,10
0723.92.508	2,80	0723.92.531	4,15
0723.92.615	2,85	0723.92.522	4,20
0723.92.509	2,90	0723.92.533	4,25
0723.92.625	2,95	0723.92.523	4,30
0723.92.510	3	0723.92.534	4,35
0723.92.635	3,05	0723.92.524	4,40
0723.92.511	3,10	0723.92.537	4,45
0723.92.645	3,15	0723.92.525	4,50
0723.92.512	3,20	0723.92.538	4,55
0723.92.655	3,25	0723.92.526	4,60
0723.92.513	3,30	0723.92.539	4,65
		0723.92.527	4,70
		0723.92.540	4,75
		0723.92.528	4,80
		0723.92.541	4,85
		0723.92.529	4,90
		0723.92.542	4,95
		0723.92.530	5
		0723.92.543	5,05
		0723.92.544	5,10
		0723.92.546	5,15
		0723.92.547	5,20
		0723.92.548	5,25
		0723.92.549	5,30
		0723.92.550	5,35
		0723.92.551	5,40
		0723.92.552	5,45
		0723.92.553	5,50
		0723.92.554	5,55
		0723.92.556	5,60

DRAWING 015 HORIZONTAL HEAD

NOTES NO.	CODE NO.	DESCRIPTION	VALIDITY	Q.TY
1	301.2.172.1A	Complete horizontal head		1
2	0370.92.390	Exhaust valve bronze guide		1
2	0370.92.395	Oversize valve guide 0.03		1
2	0370.92.396	Oversize valve guide 0.06		1
2	0370.92.397	Oversize valve guide 0.09		1
3	303.1.003.1A	Intake valve cast iron guide		1
3	303.1.003.1AB	Oversize valve guide 0.03		1
3	303.1.003.1AC	Oversize valve guide 0.06		1
3	303.1.003.1AD	Oversize valve guide 0.09		1
4	304.1.025.1A	Exhaust valve seat		1
4	304.1.025.1AB	Oversize exhaust valve seat 0.03		1
4	304.1.025.1AC	Oversize exhaust valve seat 0.06		1
5	304.1.024.1A	Intake valve seat		1
5	304.1.024.1AB	Oversize intake valve seat 0.03		1
5	304.1.024.1AC	Oversize intake valve seat 0.06		1
6	210.1.056.1A	Intake valve		1
7	211.1.051.1A	Exhaust valve		1
8	0619.92.180	Shim th. 0.3		6
8	0670.92.190	Shim th. 2		4
8	0765.92.185	Shim th. 1		2
8	0765.92.190	Shim th. 0.5		4
8	0765.92.205	Shim th. 0.2		8
9	799.1.061.1A	Closing rocker spring		2
10	821.1.115.1A	Rocker shaft		4
11	788.1.032.2A	Valve cover gasket		2
12	240.1.010.1AB	Valve cover		1

NOTES NO.	CODE NO.	DESCRIPTION	VALIDITY	Q.TY
13	771.5.067.8B	Screw		8
14	0727.92.239	See table		2
15	669.1.003.1A	Split rings		4
16	0723.92.239	See table		2
17	208.1.012.4A	Opening rocker		2
18	209.1.012.4A	Closing rocker		2
19	0375.92.210	Spring		2
20	0647.70.010	Shim		4
21	764.1.009.1A	Valve seal		1
22	764.1.013.1A	Valve seal		1
23	852.5.023.1A	Gasket		1
24	240.1.028.1A	Intake valve cover		1
25	779.1.133.1A	Screw		1
26	73500.1747	Snap ring		1
27	713.1.137.1A	Spacer		1
28	886.4.028.1A	O-Ring		2
29	787.1.008.1A	Aluminium gasket		1
30	703.1.019.1A	Ring nut		1
31	829.1.235.1A	Holder sensor		1
32	552.4.013.1A	Sensor		1
33	700.1.027.1A	Vibration damper pad		24
34	672.1.034.1A	Rubber cap		1

CATALOGUE No: 915.1.102.2E
ISSUED: 02 - 05

DRAWING 016 INLET DICT

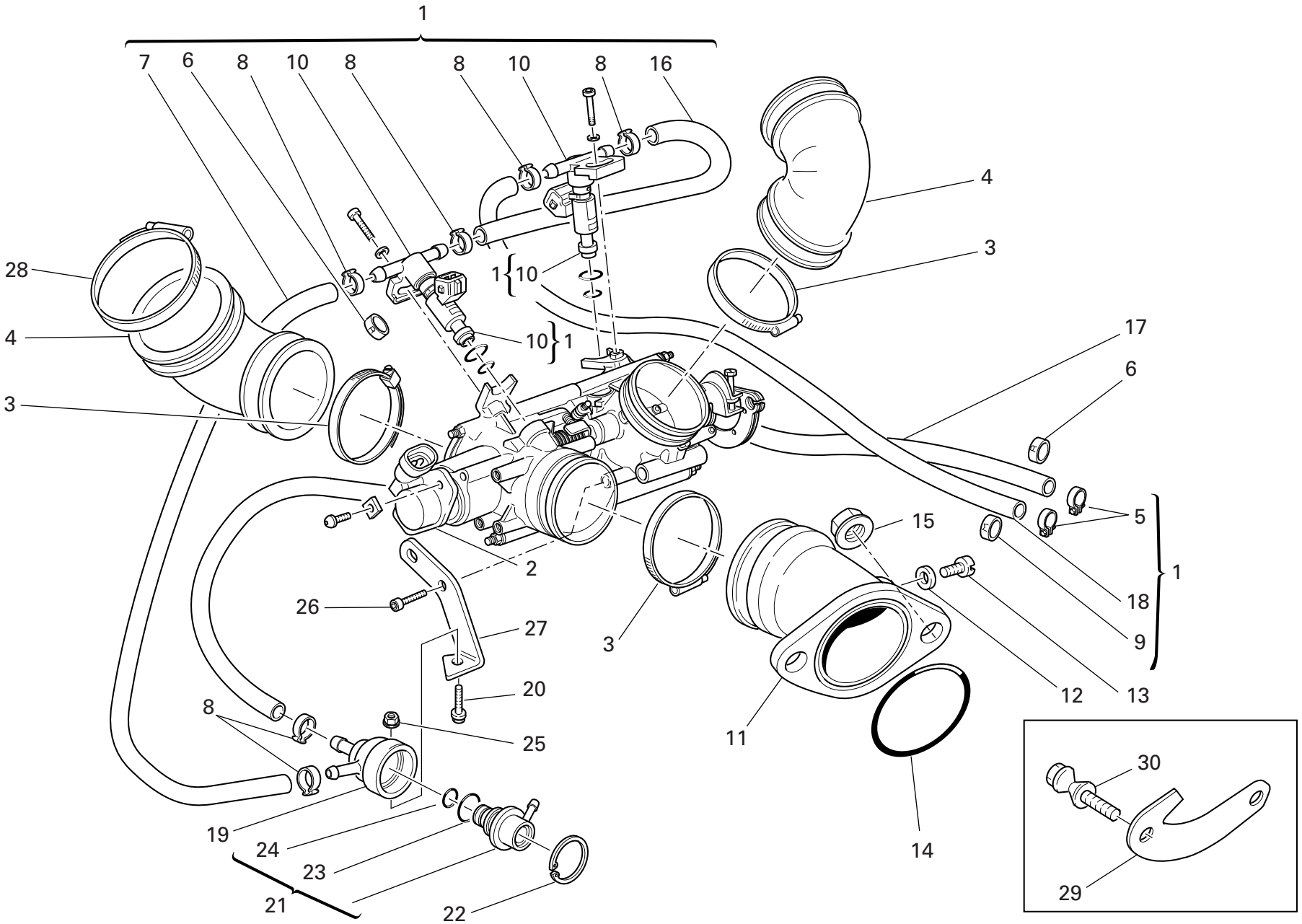

DRAWING 016 INLET DICT

NOTES NO.	CODE NO.	DESCRIPTION	VALIDITY	Q.TY
1	282.4.060.2A	Feed unit assembly		1
2	284.4.002.1A	Potentiometer		1
3	741.4.042.1A	Hose guide		4
4	801.1.027.1A	Hose		2
5	741.4.004.1A	Hose guide		2
6	741.4.041.1A	Clamp "R"		1
7	590.1.154.1A	Tube		1
8	287.4.024.1B	Hose guide		6
9	741.4.040.1A	Clamp "M"		1
10	280.4.007.1A	Injector		2
11	140.2.027.1A	Intake duct		2
12	0250.70.223	Aluminium gasket		2
13	776.5.032.8A	Screw		2
14	463.2.022.2A	O-Ring		2
15	748.1.039.1A	Nut		4
16	590.1.104.1A	Tube		1
17	590.1.162.1A	Tube		1
18	590.1.084.1A	Tube		1
19	830.1.091.2A	Holder		1
20	0000.62729	Screw		1
21	283.4.003.1A	Pressure regulator		1
22	73503.3449	Circlip		1
23	886.4.022.1A	O-ring		1
24	886.4.021.1A	O-ring		1
25	0335.03.465	El-stop nut		1
26	70620.5212	Screw		2
27	827.1.241.1A	Regulator bracket		1
28	741.4.067.1A	Hose guide		2
29	827.1.367.1B	Plate		1
30	775.1.033.1A	Screw		1

CATALOGUE No: 915.1.102.2E
ISSUED: 02 - 05

DRAWING 017 STANDS

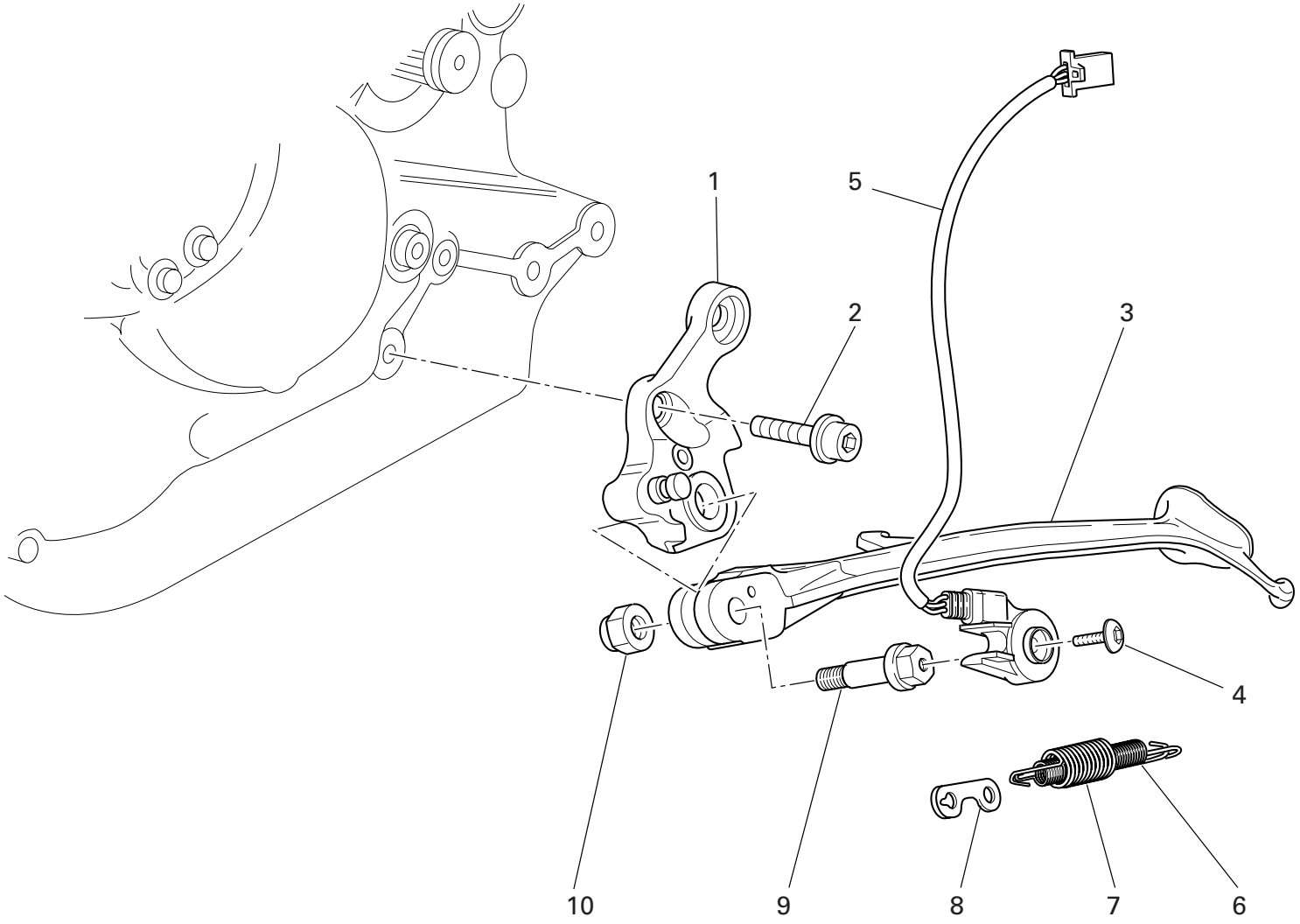

DRAWING 017 STANDS

NOTES NO.	CODE NO.	DESCRIPTION	VALIDITY	Q.TY
1	556.2.027.1A	Plate		1
2	771.5.154.8B	Screw		1
3	556.1.024.1A	Side stand		1
4	779.4.005.2A	Screw		1
5	539.1.023.2A	Switch		1
6	799.1.089.1A	Spring		1
7	799.1.088.1A	Outer spring		1
8	827.1.139.2B	Plate		1
9	556.1.018.1C	Pivot		1
10	749.4.045.2G	Nut		1

NOTES NO.	CODE NO.	DESCRIPTION	VALIDITY	Q.TY

CATALOGUE No: 915.1.102.2E
ISSUED: 02 - 05

DRAWING 018 ELECTRIC SYSTEM

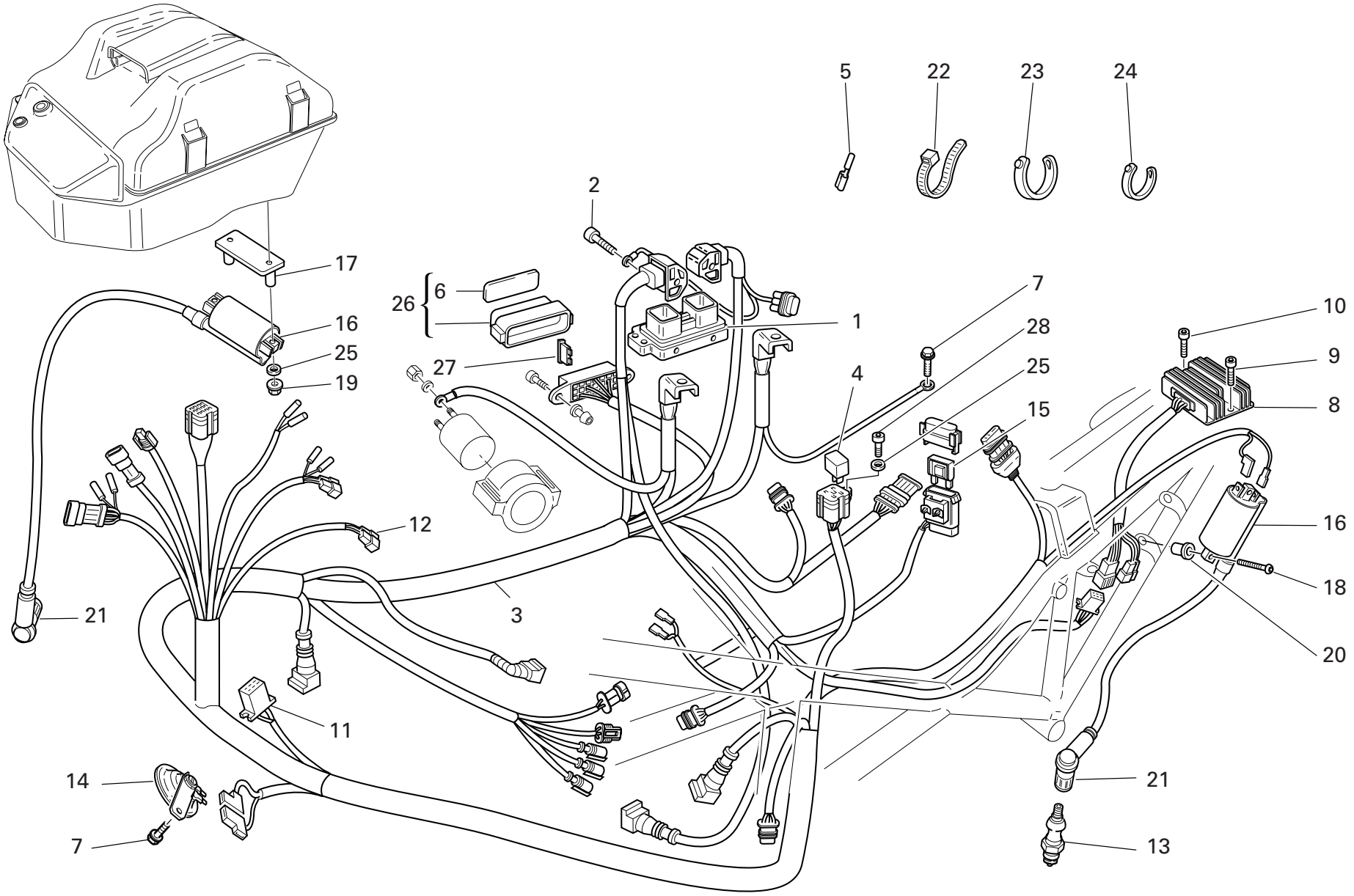

DRAWING 018 ELECTRIC SYSTEM

NOTES NO.	CODE NO.	DESCRIPTION	VALIDITY	Q.TY
1	286.4.088.1C	Injection control unit		1
2	771.5.072.2B	Screw		2
3	510.1.179.4A	Electric wiring		1
4	541.4.007.1A	Relay		2
5	0000.66527	End section		4
6	433.1.277.1B	Sticker "schema fusibili"		1
7	772.5.008.1A	Screw		2
8	540.4.010.1A	Voltage rectifier		1
9	771.5.067.8B	Screw		1
10	771.5.073.2B	Screw		1
11	0000.56803	Connector		1
12	8000.66526	Connector		1
13	670.4.008.1A	Spark plug		2
14	516.4.003.1B	Horn (BLACK)		1
15	389.4.014.1A	Fuse 40A		1
16	380.4.004.1B	Coil		2
17	827.1.236.1A	Plate		1
18	775.1.013.1A	Screw		2
19	749.5.002.1A	El-stop nut		2
20	0000.63150	Insert		2
21	672.1.013.1A	Spare cap		2
22	741.1.012.1A	Hose guide		3
23	0691.91.030	Hose guide		37
24	741.4.038.1A	Hose guide		7
25	734305N01	Washer		3
26	246.1.061.1D	Case cover		1
27	389.4.006.1A	Fuse 3A		2
27	389.4.007.1A	Fuse 7.5A		1
27	389.4.008.1A	Fuse 15A		1
27	389.4.010.1A	Fuse 30A		1
27	389.4.013.1A	Fuse 20A		1
27	389.4.016.1A	Fuse		2
28	60N102482	Screw		1

CATALOGUE No: 915.1.102.2E
ISSUED: 02 - 05

DRAWING 019 BATTERY BOX MOUNT

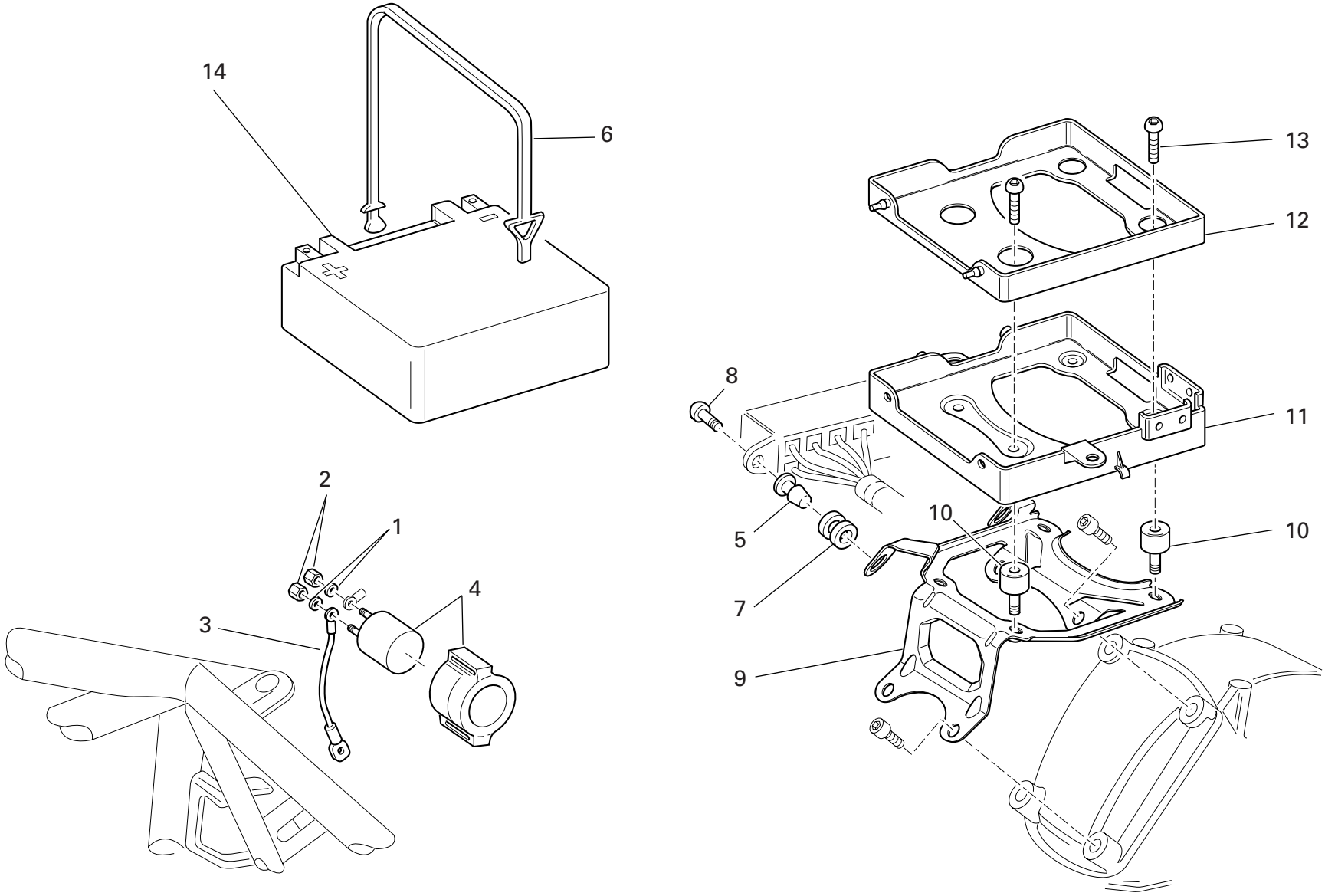

DRAWING 019 BATTERY BOX MOUNT

NOTES NO.	CODE NO.	DESCRIPTION	VALIDITY	Q.TY
1	462.4.037.6A	Spring washer		2
2	417.9.050.6A	Nut		2
3	514.1.043.1A	Solenoid starter-starter motor cable		1
4	397.4.002.1A	Remote switch		1
5	821.1.054.1A	Pin		2
6	759.1.006.1A	Spring hook		1
7	764.1.029.1A	Rubber pad		2
8	779.1.088.1A	Screw		2
9	830.1.228.1A	Bracket		1
10	700.1.031.1A	Vibration damper		4
11	829.1.283.1B	Battery box mount		1
12	829.1.285.1A	Battery carpet		1
13	0000.56525	Screw		4
14	395.2.013.1C	Battery		1

NOTES NO.	CODE NO.	DESCRIPTION	VALIDITY	Q.TY

CATALOGUE No: 915.1.102.2E
ISSUED: 02 - 05

DRAWING 020 EXHAUST SYSTEM

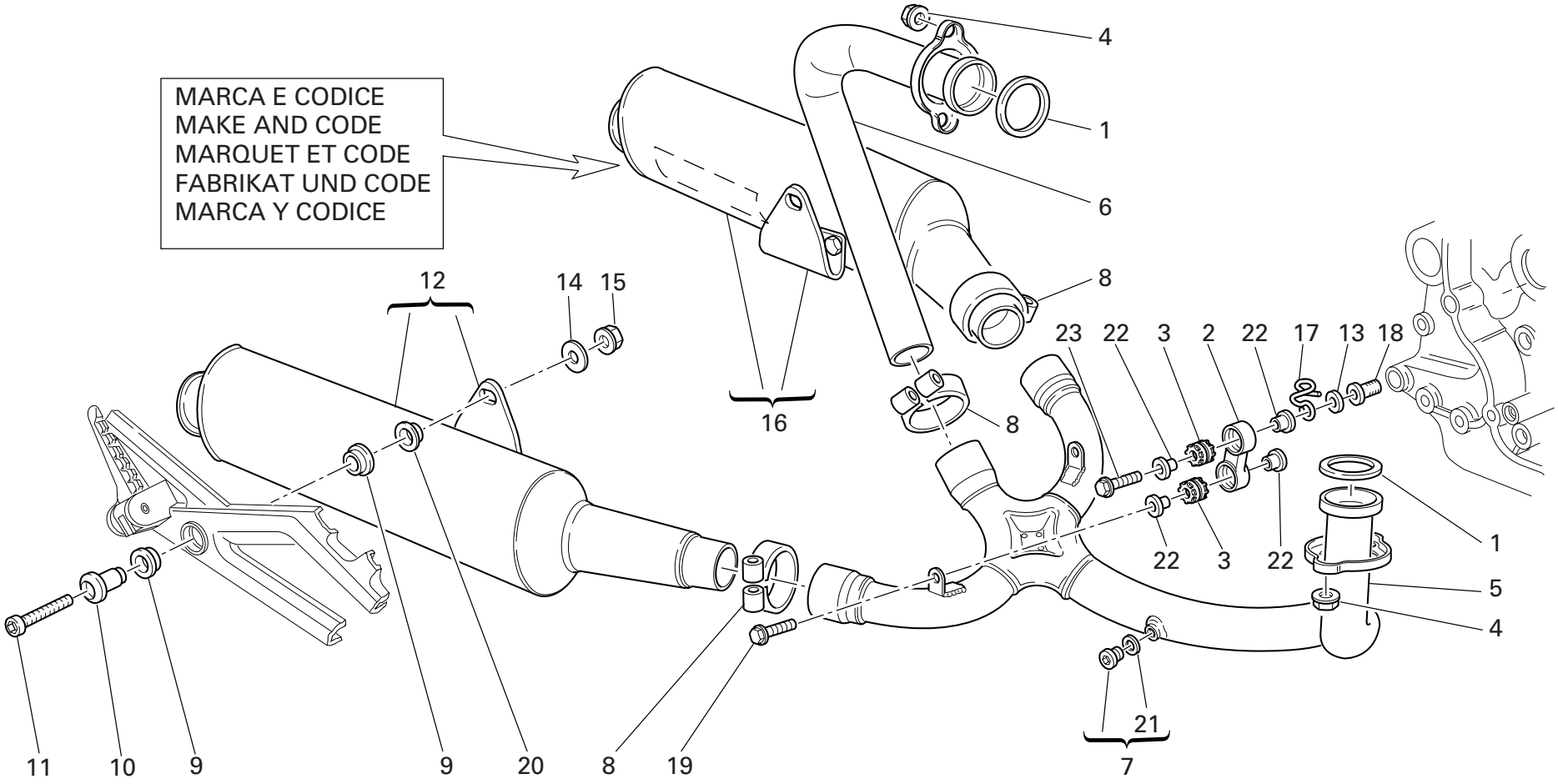

DRAWING 020 EXHAUST SYSTEM

NOTES NO.	CODE NO.	DESCRIPTION	VALIDITY	Q.TY
1	0370.84.005	Exhaust gasket		2
2	80A0.62649	Holder		2
3	764.1.024.1A	Vibration damper pad		4
4	748.4.033.1A	Nut		4
5	570.1.065.2A	Horizontal head exhaust pipe		1
6	571.1.065.2A	Vertical head exhaust pipe		1
7	780.1.007.1A	Cap		2
8	741.1.028.1A	Hose guide		3
9	764.1.001.1A	Rubber pad		4
10	716.1.055.1A	Spacer		2
11	779.5.003.1A	Screw		2
12	573.1.050.2D	R.H. silencer		1
12	573.1.050.3D	R.H. silencer (TERMIGNONI)		1
13	852.1.176.1A	Washer		1
14	852.1.196.1A	Washer		2
15	729906FN1	Nut		2
16	574.1.050.2D	L.H. silencer		1
16	574.1.050.3D	L.H. silencer (TERMIGNONI)		1
17	829.1.275.1A	Ring		1
18	779.1.247.1A	Screw		2
19	0000.62730	Screw		2
20	711.1.090.1A	Bush		2
21	852.5.024.1A	Gasket th.1		2
22	713.1.082.1A	Spacer		8
23	0000.62729	Screw		2

NOTES NO.	CODE NO.	DESCRIPTION	VALIDITY	Q.TY

CATALOGUE No: 915.1.102.2E
ISSUED: 02 - 05

DRAWING 021 INSTRUMENT PANEL

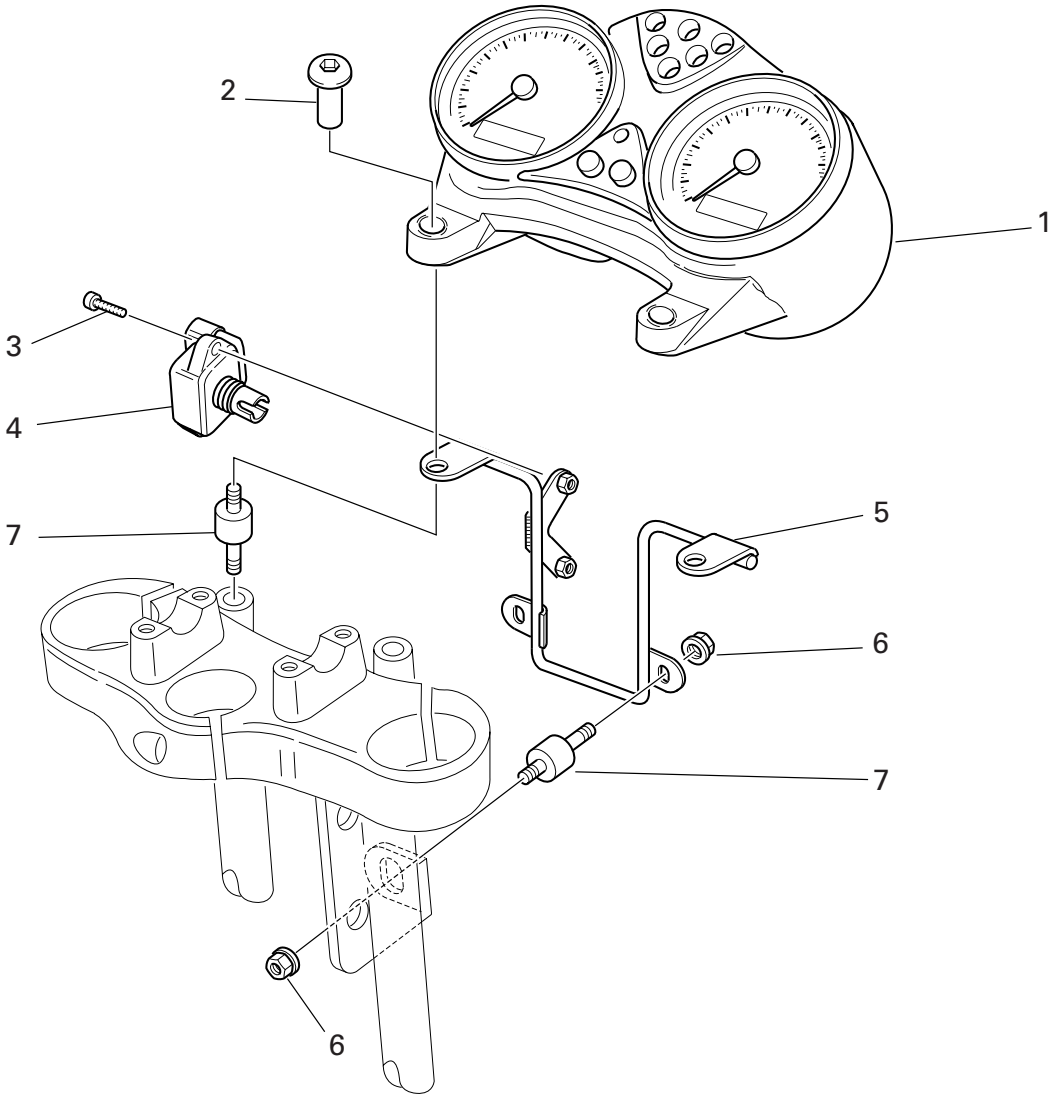

DRAWING 021 INSTRUMENT PANEL

NOTES NO.	CODE NO.	DESCRIPTION	VALIDITY	Q.TY
1	406.1.026.1A	Complete instrument panel		1
2	779.1.214.1B	Special screw		2
3	775.1.003.1A	Screw		2
4	552.4.031.1A	Sensor		1
5	470.1.062.1A	Frame (METALLIC DARK GREY)		1
6	748.4.026.1B	Nut		4
7	700.1.038.1A	Vibration damper pad		4

NOTES NO. CODE NO. DESCRIPTION VALIDITY Q.TY

CATALOGUE No: 915.1.102.2E
ISSUED: 02 - 05

DRAWING 022 FRONT HEAD-LIGHT

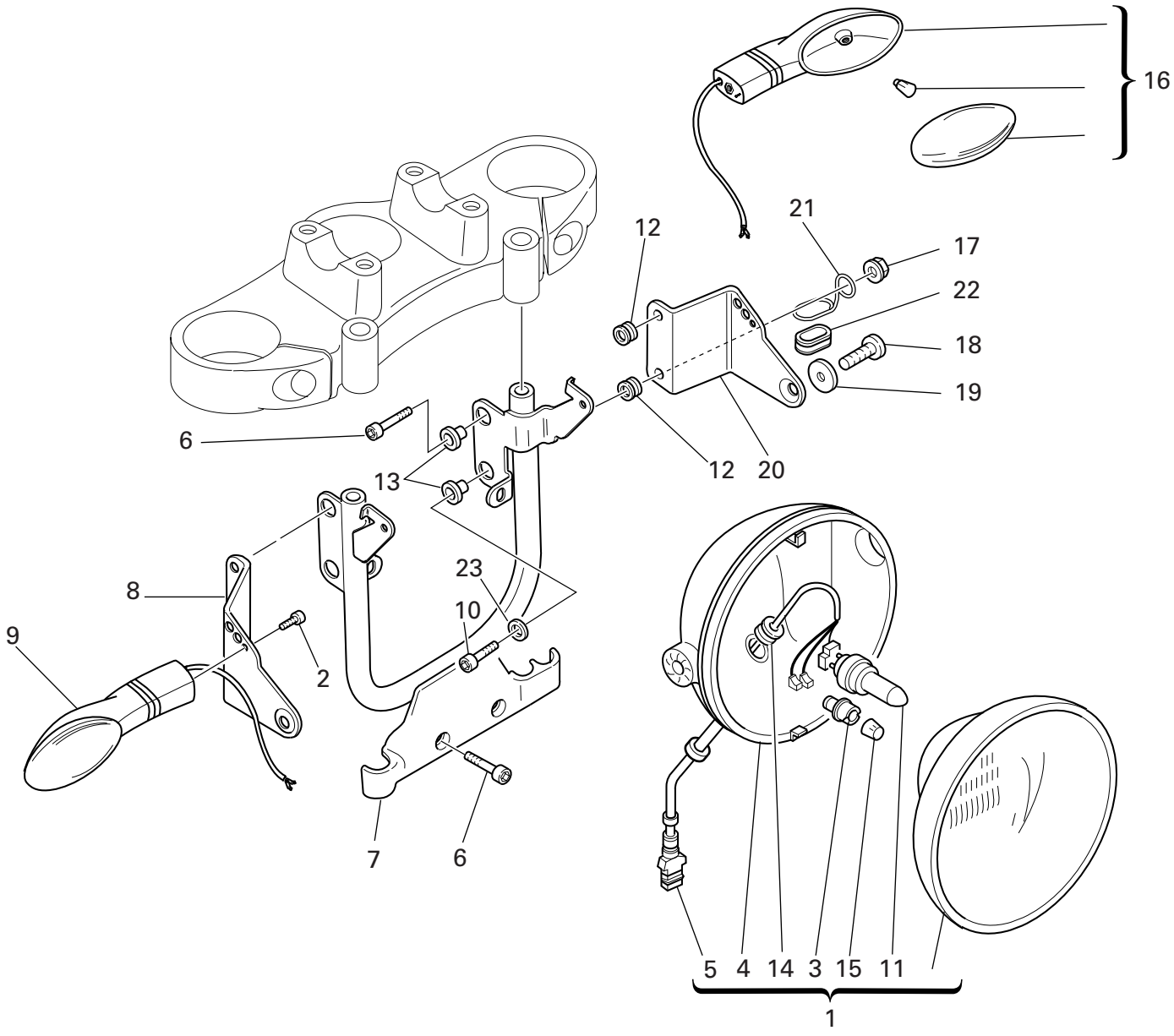

DRAWING 022 FRONT HEAD-LIGHT

NOTES NO.	CODE NO.	DESCRIPTION	VALIDITY	Q.TY
1	520.4.007.1C	Complete headlight L.H. drive		1
2	60N107335	Screw		2
3	521.4.005.1A	Lamp holder		1
4	723.1.003.1A	Cap		1
5	510.1.075.1A	Electric wiring		1
6	771.5.667.8B	Screw		5
7	829.1.099.1D	Headlight holder		1
8	830.1.194.1A	R.H. bracket		1
9	530.4.007.3A	Turn indicator		1
10	60N102510	Screw		1
11	0796.38.305	Bulb 55/60W		1
12	764.1.090.1A	Rubber pad		4
13	716.1.022.1A	Spacer		4
14	758.1.014.1A	Fairlead		1
15	0659.38.226	Bulb 4W		1
16	530.4.008.3A	Turn indicator		1
17	750.5.001.1A	Nut		4
18	779.5.056.1A	Screw		2
19	841.1.017.1A	Retainer		2
20	830.1.195.1A	L.H. bracket		1
21	881.1.035.1A	Ring		1
22	0797.41.090	Fairlead rubber ring		1
23	734306N01	Washer		1

CATALOGUE No: 915.1.102.2E
ISSUED: 02 - 05

DRAWING 023 PLATE HOLDER - REAR LIGHT

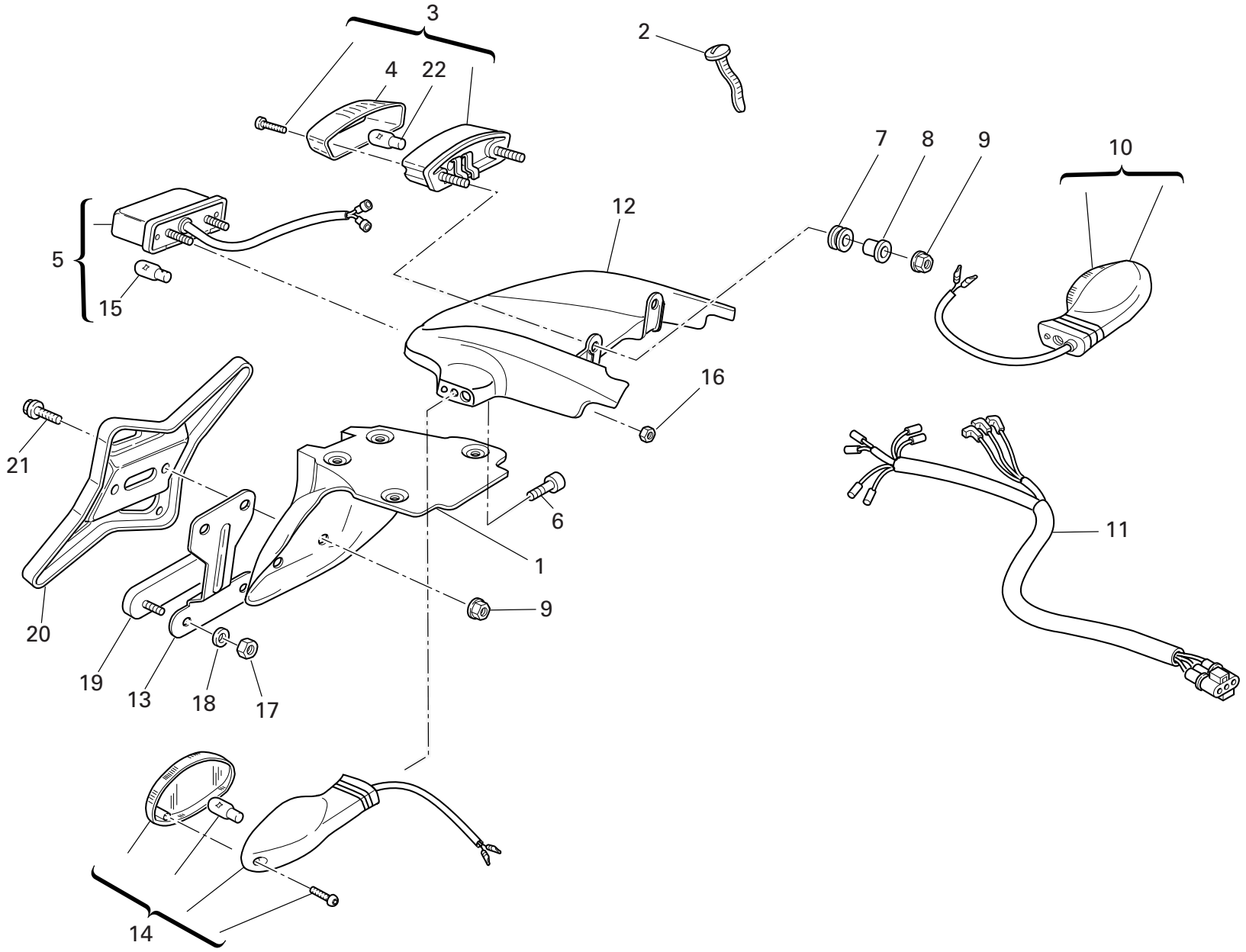

DRAWING 023 PLATE HOLDER - REAR LIGHT

NOTES NO.	CODE NO.	DESCRIPTION	VALIDITY	Q.TY
1	561.1.018.1A	Number plate holder		1
2	0691.91.030	Hose guide		1
3	525.4.007.3A	Tail lamp		1
4	526.4.003.1A	Cup		1
5	525.1.004.3A	Tail lamp		1
6	771.5.065.8B	Screw		2
7	764.1.084.1A	Vibration damper pad		2
8	0000.44099	Spacer		2
9	0000.44240	Nut		4
10	530.4.010.3A	Turn indicator		1
11	510.1.076.1B	Electric wiring		1
12	565.1.026.2A	Protection		1
13	827.1.191.4A	Plate		1
14	530.4.009.3A	Turn indicator		1
15	0000.36230	Bulb		1
16	748.4.100.1AB	Nut		2
17	749.5.001.1A	Nut		2
18	852.5.001.1A	Washer		2
19	529.1.009.1A	Reflector		1
20	561.1.017.1B	Plate		1
21	772.5.012.1A	Screw		2
22	390.4.003.1A	Two-light bulb 12V 5/21W		1

NOTES NO.	CODE NO.	DESCRIPTION	VALIDITY	Q.TY

CATALOGUE No: 915.1.102.2E
ISSUED: 02 - 05

DRAWING 024 FRONT FORK

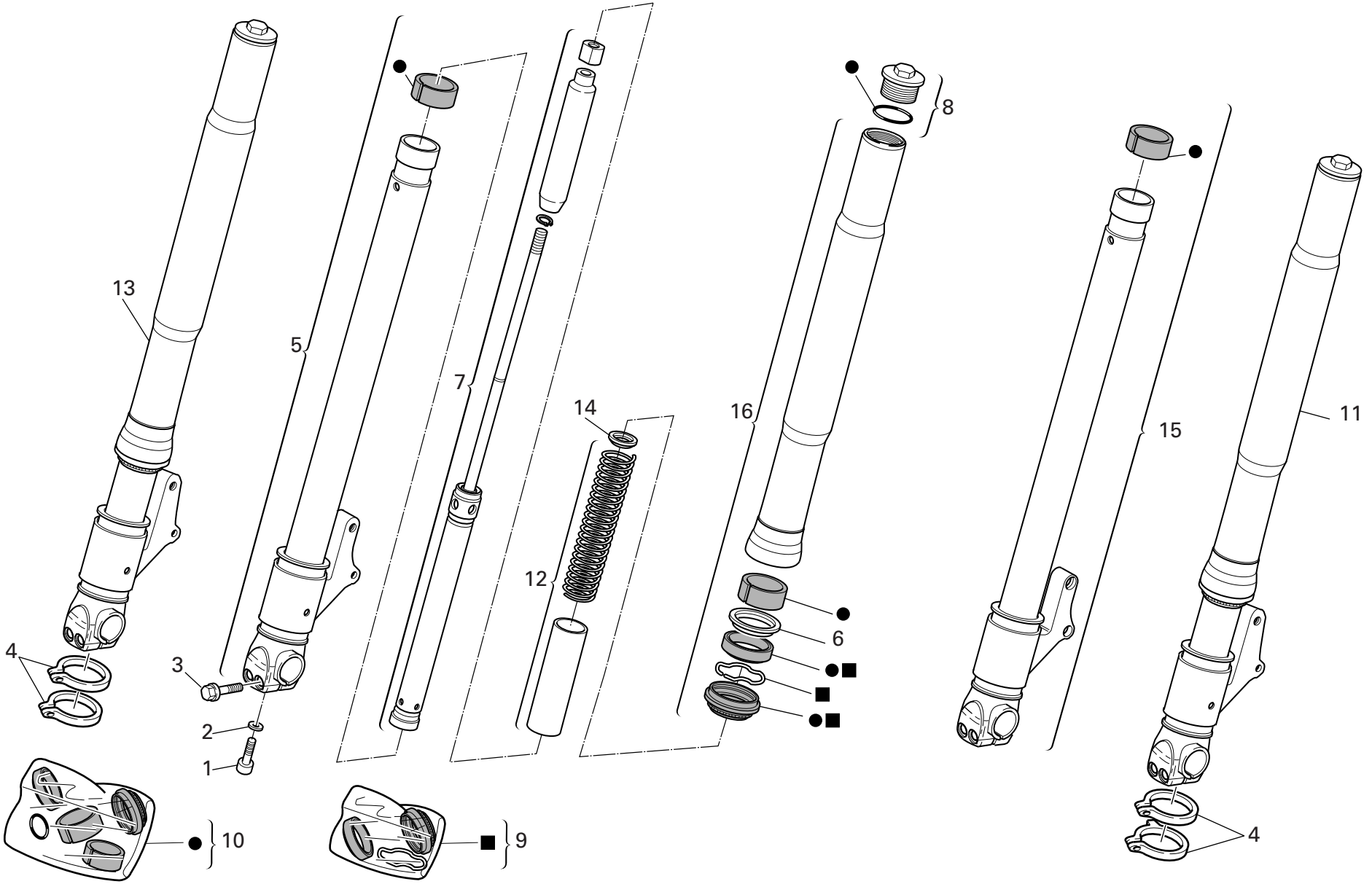

DRAWING 024 FRONT FORK

NOTES NO.	CODE NO.	DESCRIPTION	VALIDITY	Q.TY
1	71502.2594	Screw		2
2	856.1.057.1A	Washer		2
3	8A00.69056	Screw		4
4	8000.70127	Hose guide		4
5	350.1.015.1A	Complete R.H. slider		1
6	349.1.152.1A	Retainer		2
7	348.2.012.1A	Complete pumping element		2
8	349.2.019.1A	Complete cap		2
9	349.2.021.1A	Seat kit		2
10	349.2.020.1A	Overhaul kit		2
11	345.2.010.2A	L.H. fork leg assembly		1
12	347.2.004.1A	Spring kit		2
13	344.2.010.2A	R.H. fork leg assembly		1
14	349.1.107.1A	Check ring		2
15	350.1.014.1A	Complete L.H. slider		1
16	349.1.157.1A	Stanchion tube		2

NOTES NO.	CODE NO.	DESCRIPTION	VALIDITY	Q.TY

CATALOGUE No: 915.1.102.2E
ISSUED: 02 - 05

DRAWING 025 FRONT AND REAR WHEELS

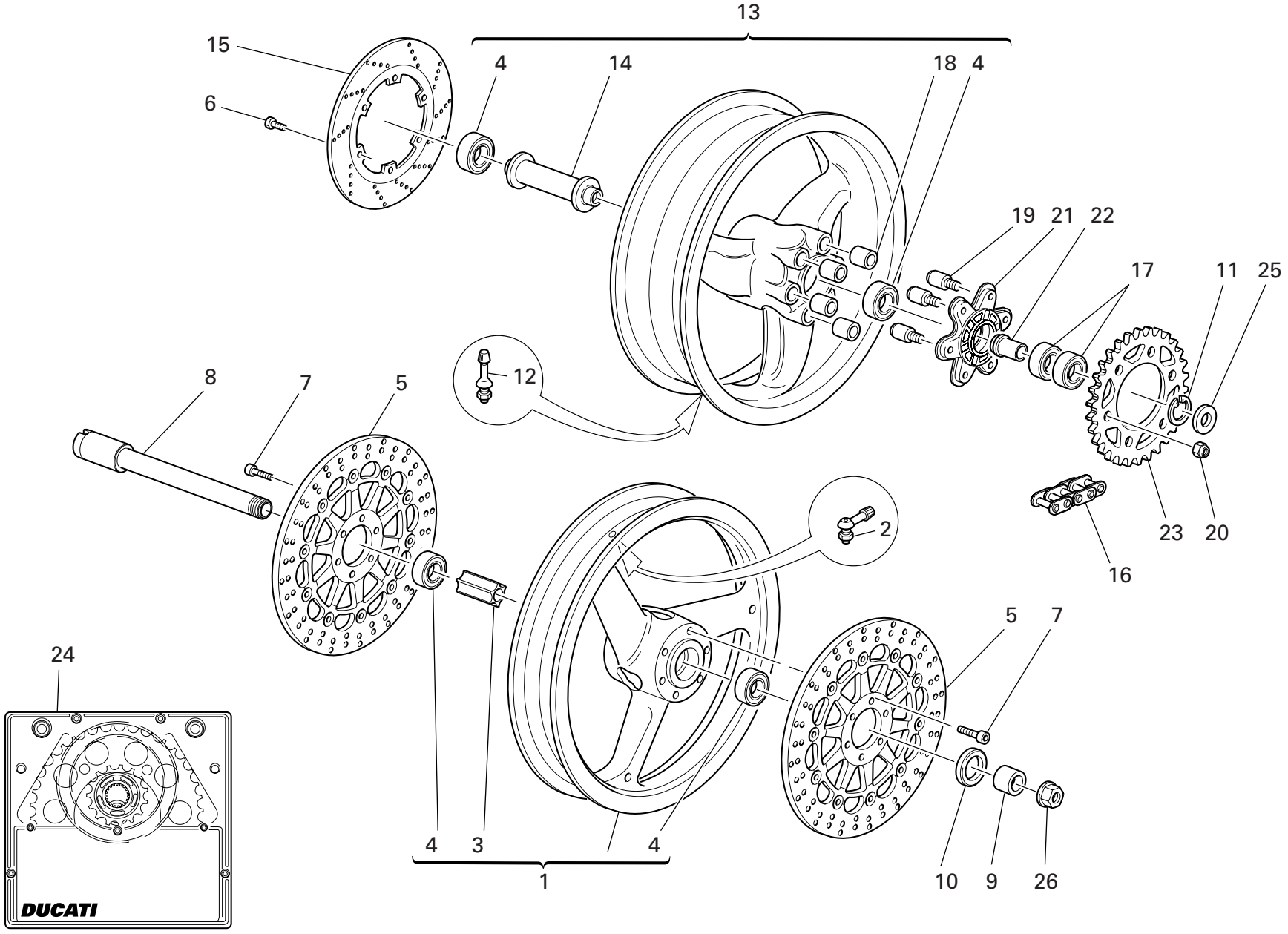

DRAWING 025 FRONT AND REAR WHEELS

NOTES NO.	CODE NO.	DESCRIPTION	VALIDITY	Q.TY
1	501.2.080.1AB	Front wheel rim (BLACK)		1
1	501.2.080.1AE	Front wheel rim (RED)		1
2	497.2.001.2A	Valve		1
3	714.1.028.1A	Inner spacer		1
4	75162.2566	Bearing		4
5	492.4.024.1A	Brake disc		2
6	779.1.311.1A	Screw		6
7	779.1.399.1A	Screw		12
8	819.1.017.1B	Front wheel spindle		1
9	714.1.045.1A	Spacer		1
10	0000.64471	Seal ring		1
11	884.5.008.1A	Circlip		1
12	0803.77.010	Valve		1
13	502.2.110.1AB	Rear wheel rim (BLACK)		1
13	502.2.110.1AE	Rear wheel rim (RED)		1
14	714.1.046.1A	Inner spacer		1
15	492.4.003.2A	Brake disc		1
16	676.4.032.2A	Chain (106 Links)		1
17	75162.3075	Bearing		2
18	700.1.005.1A	Vibration damper		6
19	821.1.039.1B	Pin		6
20	748.4.024.1A	Nut		6
21	160.1.049.1B	Rear sprocket flange		1
22	710.1.041.1C	Bush		1
23	494.1.101.1A	Ring gear z=48		1
24	676.2.057.1A	Final drive kit		1
25	713.1.097.1C	Spacer		1
26	748.1.014.1C	Fork nut		1

CATALOGUE No: 915.1.102.2E
ISSUED: 02 - 05

DRAWING 026 HANDLEBAR AND CONTROLS

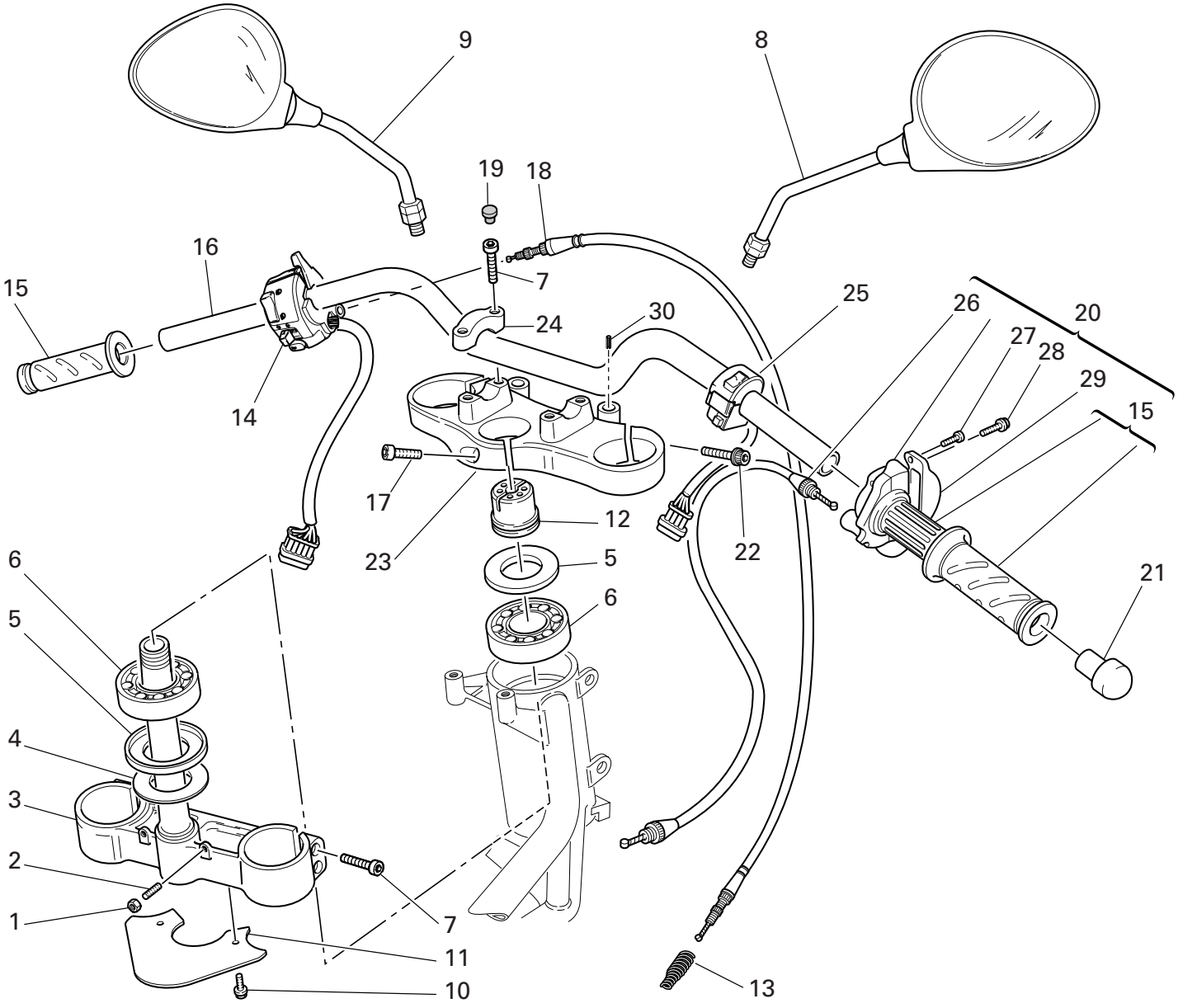

DRAWING 026 HANDLEBAR AND CONTROLS

NOTES NO.	CODE NO.	DESCRIPTION	VALIDITY	Q.TY
1	417.9.030.8A	Nut		2
2	779.1.099.1A	Special screw		2
3	342.2.015.1C	Steering head base		1
4	852.1.103.1A	Washer		1
5	930.1.004.1A	Seal ring		2
6	702.4.004.1A	Bearing		2
7	60N102557	Screw		8
8	523.4.014.1A	R.H. rear-view mirror		1
9	523.4.015.1A	L.H. rear-view mirror		1
10	772.5.004.1A	Screw		2
11	460.1.076.2A	Mudflap		1
12	703.1.013.1A	Ring nut		1
13	799.1.058.1A	Starter control transmission return spring		1
14	651.4.011.1A	L.H. switch		1
15	8000.78345	Grips pair		1
16	360.1.035.1A	Handlebar		1
17	779.5.056.1A	Screw		1
18	657.1.015.1A	Flexible cable		1
19	0659.37.040	Cap		4
20	654.2.003.1A	Throttle control		1
21	872.1.028.1A	Cap		2
22	771.5.725.8B	Screw		2
23	341.1.030.1C	Steering head		1
24	360.1.033.1B	Bracket		2
25	650.4.008.1B	R.H. switch		1
26	656.1.036.2A	Throttle control transmission		1
27	8000.66774	Screw		2
28	772.5.023.1A	Screw		2
29	658.4.002.1B	Cover		1
30	861.5.003.1A	Spring pin		2
31	771.5.727.8B	Screw		4

CATALOGUE No: 915.1.102.2E
ISSUED: 02 - 05

DRAWING 027 CLUTCH CONTROL

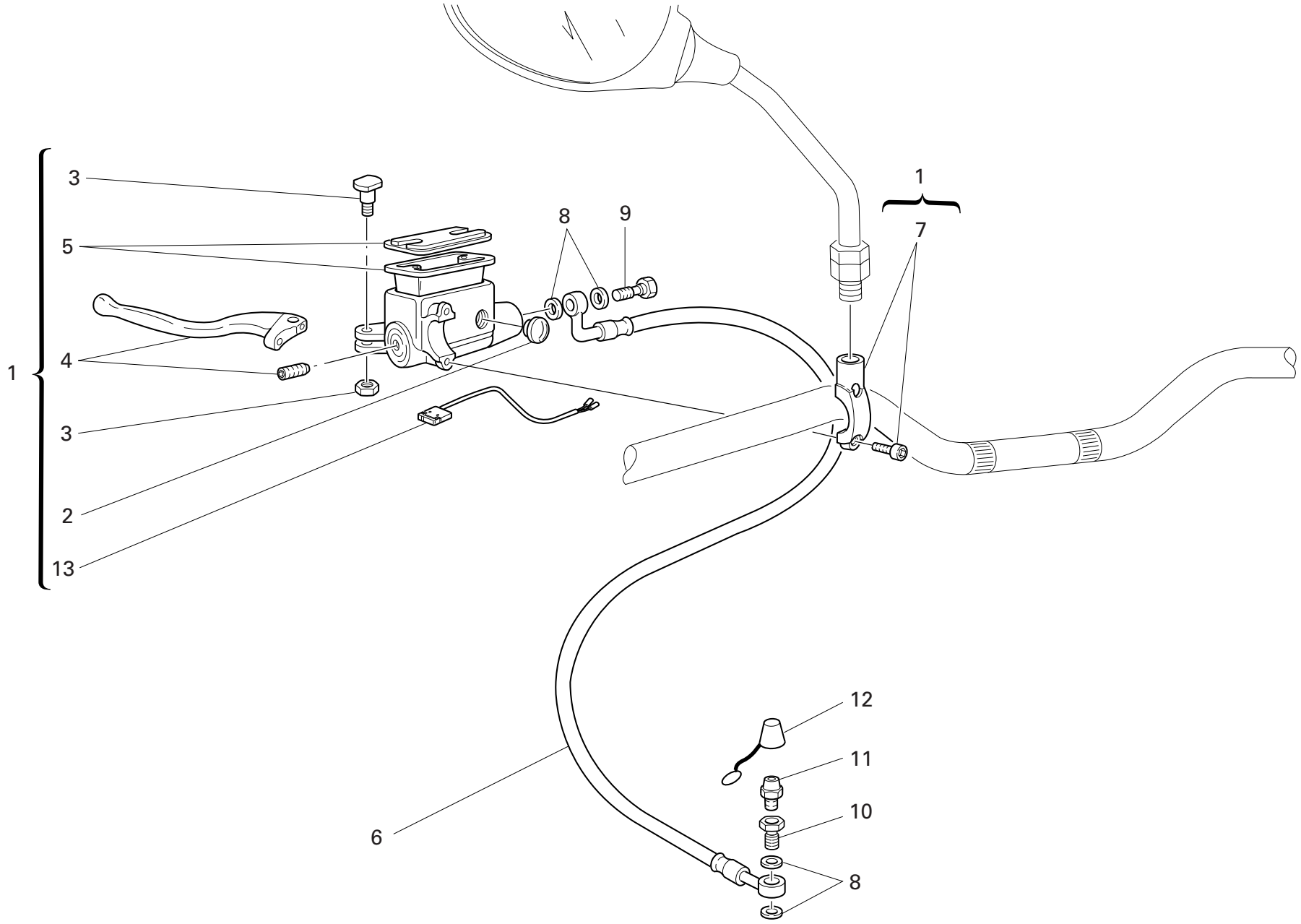

DRAWING 027 CLUTCH CONTROL

NOTES NO.	CODE NO.	DESCRIPTION	VALIDITY	Q.TY
1	630.4.022.1A	Clutch drive pump		1
2	0000.49654	Spare inspection window		1
3	626.4.025.1A	Spare lever pin		1
4	626.4.007.1C	Lever with dowel		1
5	0000.46665	Spare cap		1
6	632.1.031.1A	Clutch control pipe (METAL PLAITED)		1
7	626.4.029.1A	Spare bracket		1
8	852.5.024.1A	Gasket th.1		4
9	779.1.366.1AB	Special screw		1
10	779.1.397.1A	Special screw		1
11	0000.33552	Bleed		1
12	612.4.005.1A	Dust seal		1
13	539.4.034.1A	Microswitch		1

NOTES NO.	CODE NO.	DESCRIPTION	VALIDITY	Q.TY

CATALOGUE No: 915.1.102.2E
ISSUED: 02 - 05

DRAWING 028 FRONT BRAKE

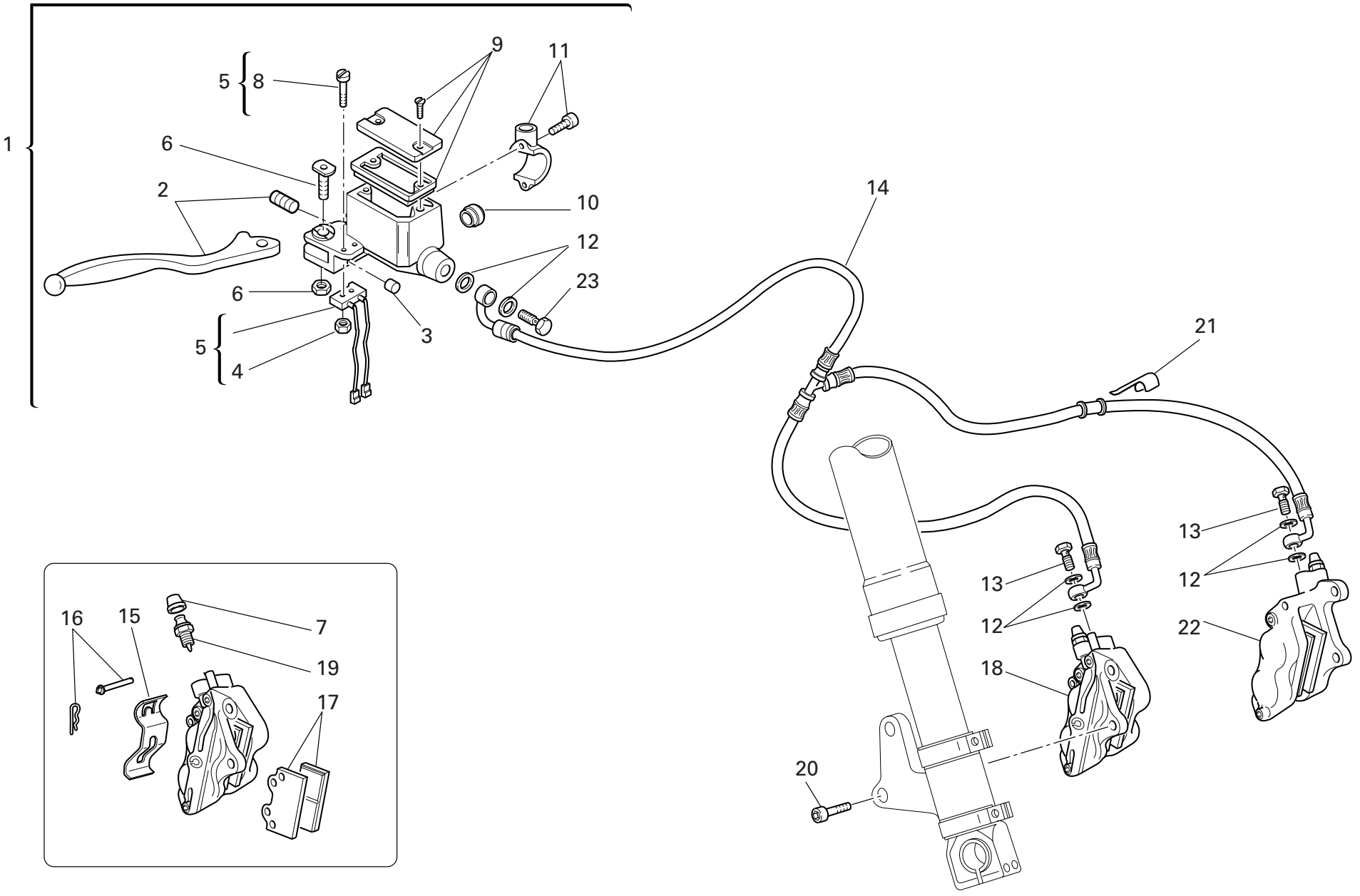

DRAWING 028 FRONT BRAKE

NOTES NO.	CODE NO.	DESCRIPTION	VALIDITY	Q.TY
1	624.4.037.1A	Front brake pump		1
2	626.1.002.1A	Lever with dowel		1
3	195.4.002.1A	Rubber pad		1
4	72465.0214	Nut		2
5	539.4.004.1B	Microswitch		1
6	0000.46664	Spare lever pin		1
7	612.4.008.1A	Dust seal		2
8	776.5.307.2A	Screw		2
9	0000.46665	Spare cap		1
10	626.4.003.1A	Spare inspection window		1
11	626.4.023.1A	Spare bracket		1
12	852.5.024.1A	Gasket th.1		6
13	779.1.366.1AB	Special screw		2
14	618.4.066.1A	Caliper pump pipe (METAL PLAITED)		1
15	612.4.017.1A	Spring		2
16	612.4.014.1A	Spare pins and spring		2
17	613.4.020.1A	Pads pair		2
18	610.4.066.1A	R.H. brake caliper		1
19	631.4.004.1A	Spare bleed union		2
20	771.5.431.8B	Screw		4
21	829.1.141.1B	Fairlead		2
22	610.4.065.1A	L.H. brake caliper		1
23	779.1.415.1A	Special screw		1

NOTES NO.	CODE NO.	DESCRIPTION	VALIDITY	Q.TY

CATALOGUE No: 915.1.102.2E
ISSUED: 02 - 05

DRAWING 029 REAR BRAKE

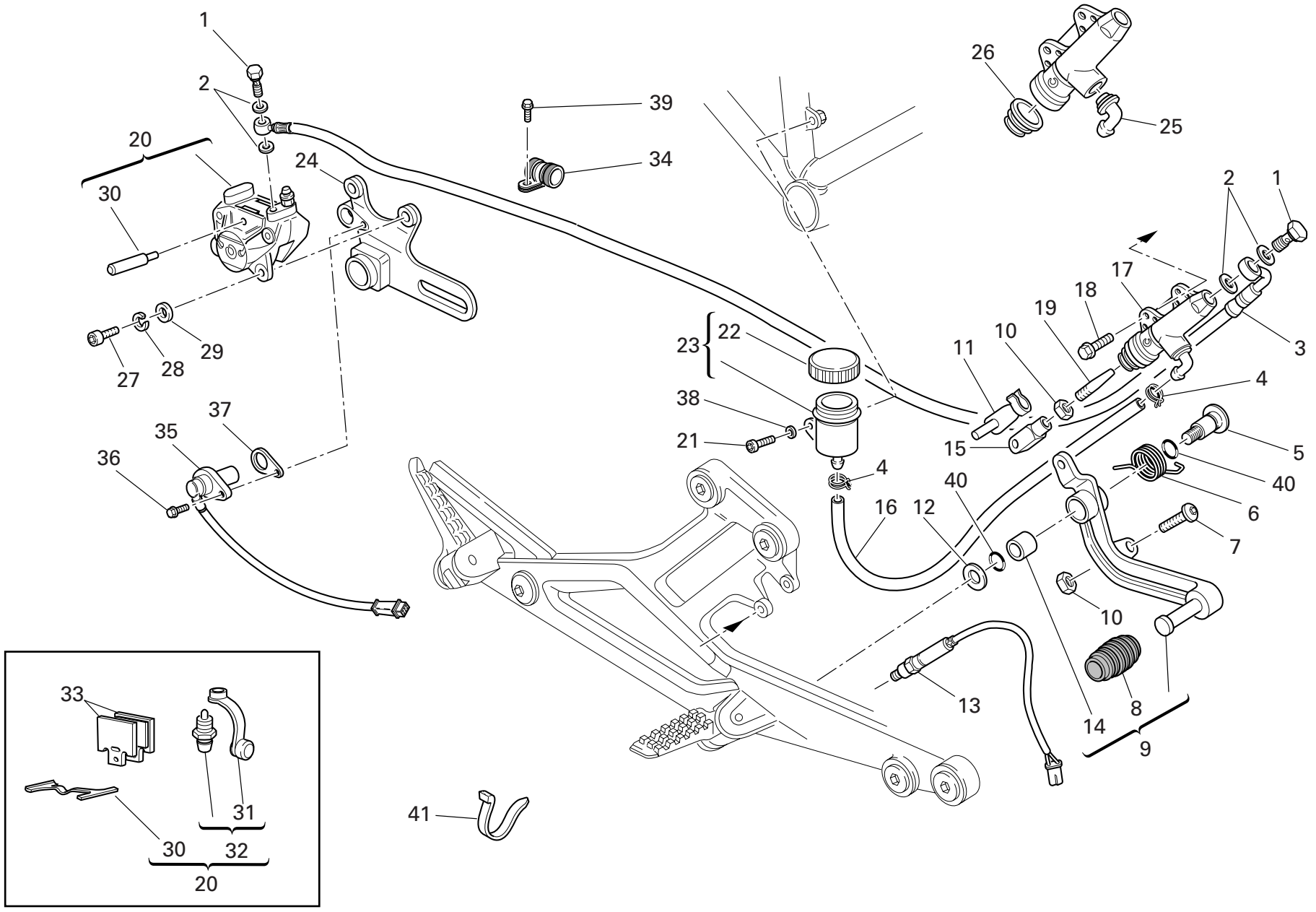

DRAWING 029 REAR BRAKE

NOTES NO.	CODE NO.	DESCRIPTION	VALIDITY	Q.TY
1	779.1.366.1AB	Special screw		2
2	852.5.024.1A	Gasket th.1		4
3	619.4.030.1A	Rear brake line		1
4	741.4.043.1A	Hose guide		2
5	821.1.170.1A	Pin		1
6	799.1.044.1A	Spring		1
7	779.1.054.1AA	Special screw		1
8	765.1.001.1A	Rubber pad		1
9	457.2.007.1A	Brake control lever		1
10	417.9.030.6A	Nut		2
11	850.1.005.1A	Spring		1
12	0000.59485	Washer		1
13	539.4.003.1B	Switch		1
14	8000.59056	Bush		1
15	184.1.001.1A	Fork		1
16	877.1.039.1A	Tube		1
17	625.4.005.1AB	Rear brake pump		1
18	772.5.023.1A	Screw		2
19	8000.62586	Adjuster rod		1
20	611.4.022.1A	Rear brake caliper		1
21	707006N02	Screw		1
22	893.4.005.1A	Cap		1
23	585.4.001.1A	Complete oil tank		1
24	825.1.030.1A	Caliper holder plate		1
25	631.4.008.1A	Spare union		1
26	626.4.013.1A	Dust cover		1
27	771.5.125.2C	Screw		2
28	734008N01	Spring washer		2
29	0670.80.010	Washer		2
30	612.4.013.1B	Spare pins and spring		1
31	612.4.008.1A	Dust seal		1
32	0000.39727	Spare bleed union		1
33	613.4.073.1A	Pads pair		1
34	741.4.062.1A	Clip		1
35	552.4.037.1A	Sensor		1
36	771.5.665.2B	Screw		1
37	713.1.192.1A	Spacer		1
38	734406N01	Washer		1
39	8A00.67997	Screw		1
40	0000.01199	O-ring		2
41	0691.91.030	Hose guide		1

CATALOGUE No: 915.1.102.2E
ISSUED: 02 - 05

DRAWING 030 FRAME

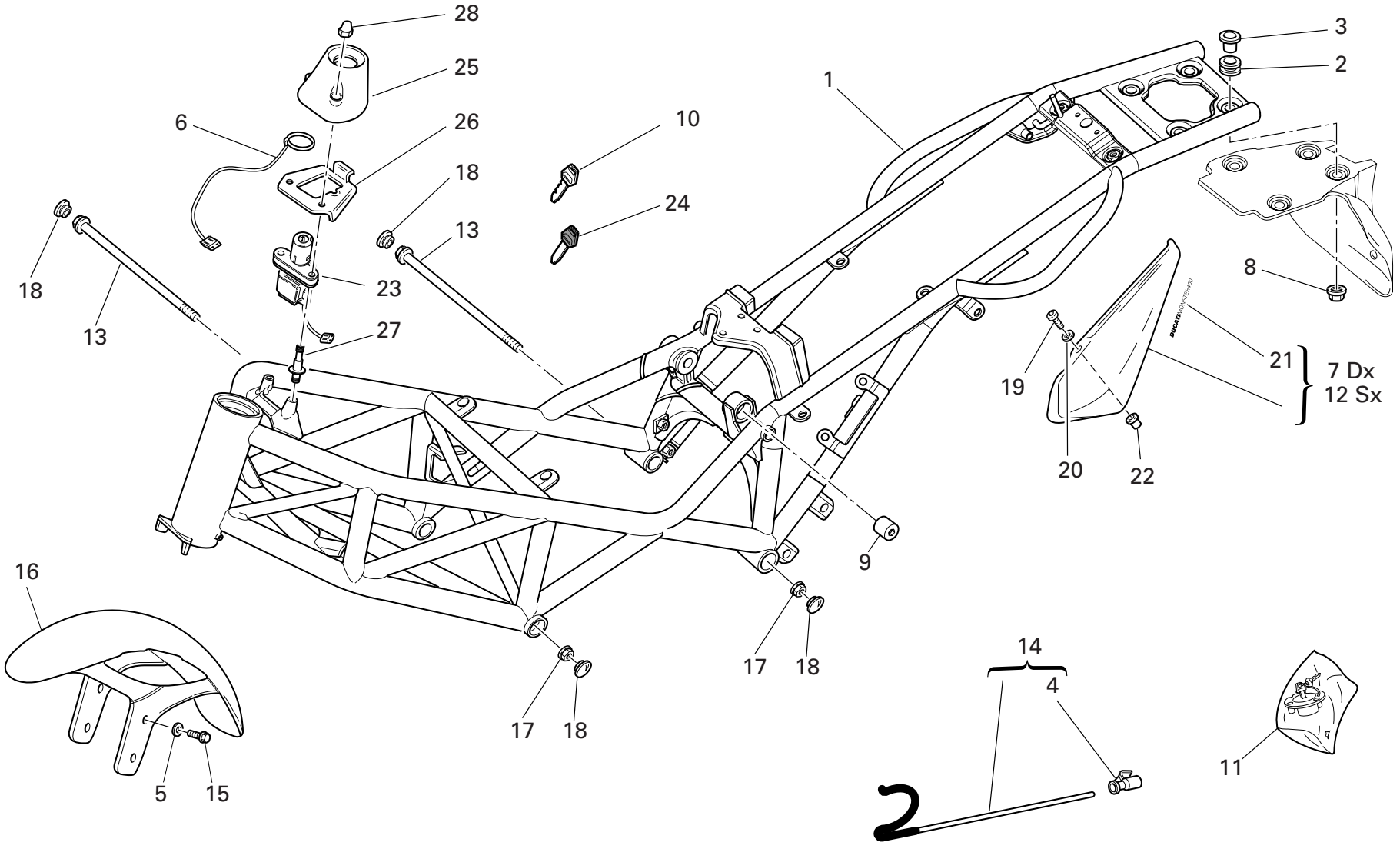

DRAWING 030 FRAME

NOTES NO.	CODE NO.	DESCRIPTION	VALIDITY	Q.TY
1	470.1.056.3AA	Frame (METALLIC DARK GREY)		1
1	470.1.056.3AB	Frame (BLACK)		1
1	470.1.056.3AF	Frame (RED)		1
2	764.1.029.1A	Rubber pad		4
3	0000.44099	Spacer		4
4	764.1.015.1B	Rubber pad		1
5	856.1.042.1A	Nylon washer		4
6	518.4.004.1B	Antenna		1
7	482.1.120.1B	R.H. body panel		1
8	729906FN1	Nut		4
9	750.1.060.1A	Nut		1
10	598.4.018.1A	Wrench without Transponder		2
11	598.2.030.1A	Locks kit		1
12	482.1.119.1B	L.H. body panel		1
13	779.1.213.1A	Screw		2
14	117.2.049.1A	Rod		1
15	772.1.063.1A	Screw		4
16	564.1.029.2BA	Front mudguard (RED)		1
16	564.1.029.2BG	Front mudguard (METALLIC DARK GREY)		1
16	564.1.029.2BT	Front mudguard (BLACK)		1
17	748.4.002.1A	Nut		2
18	872.1.026.1A	Cap		4
19	775.1.002.1A	Screw		4
20	0000.63161	Washer		4
21	436.1.146.1B	Sticker "DUCATI MONSTER 400"		2
22	0000.63150	Insert		4
23	652.4.006.1A	Key-operated switch		1
24	598.4.016.1A	Wrench with Transponder		1
25	246.1.060.2A	Cover		1
26	827.1.211.1A	Plate		1
27	779.1.221.1A	Special screw		2
28	749.4.002.1A	Nut		2

CATALOGUE No: 915.1.102.2E
ISSUED: 02 - 05

DRAWING 031 GEARCHANGE LEVER - FOOT REST

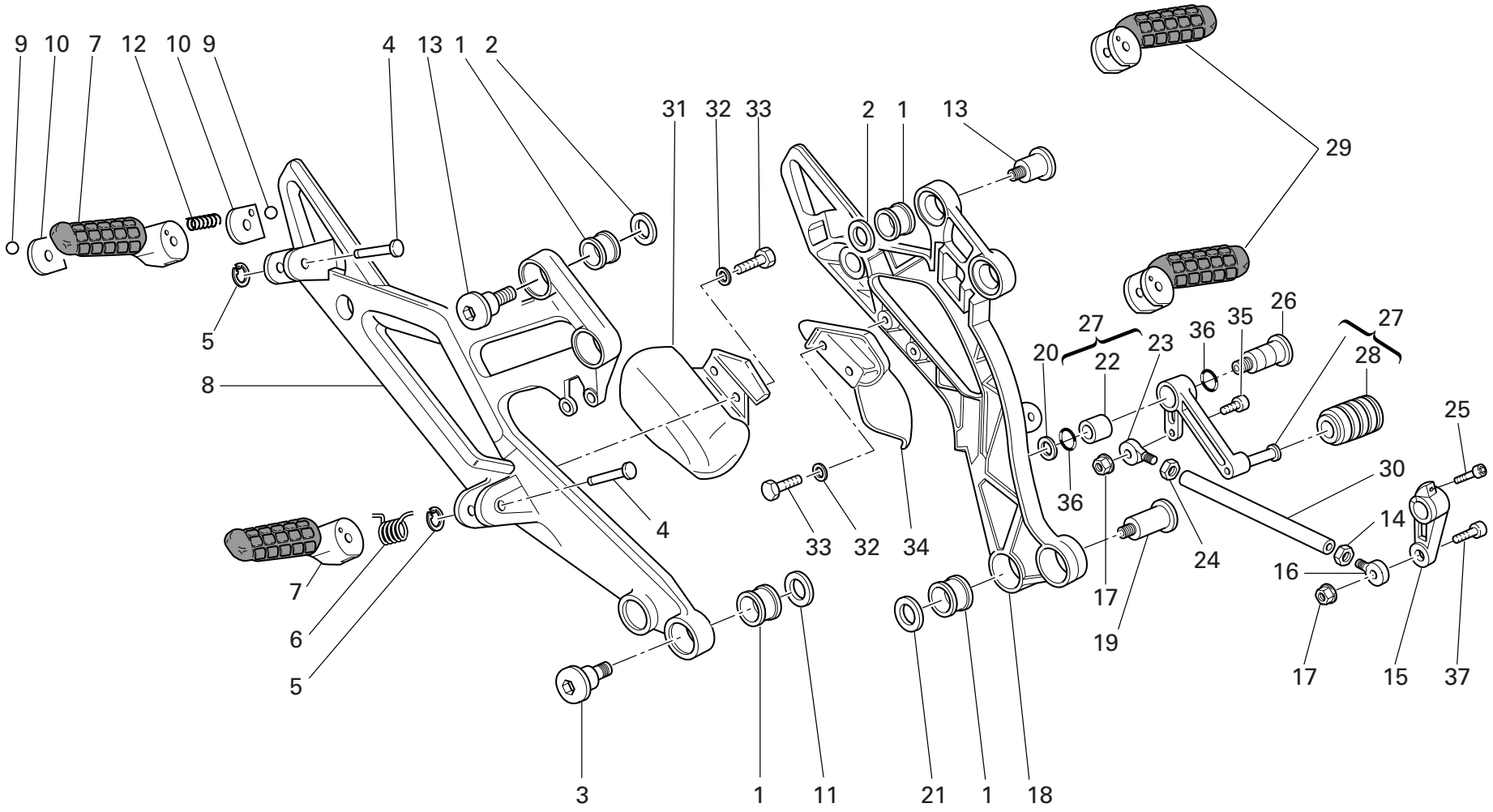

DRAWING 031 GEARCHANGE LEVER - FOOT REST

NOTES NO.	CODE NO.	DESCRIPTION	VALIDITY	Q.TY
1	700.1.049.1A	Vibration damper		8
2	852.1.099.1A	Washer		4
3	779.1.206.1AB	Special screw		2
4	821.1.090.1A	Pin		4
5	0170.91.730	Ring		4
6	8000.60700	Spring		2
7	464.1.017.1A	R.H. foot-rest		2
8	824.1.024.1AB	R.H. foot peg holder plate		1
9	847.4.002.1A	Ball		4
10	827.1.161.1A	Plate		4
11	852.1.065.1A	Washer		4
12	799.1.252.1A	Spring		2
13	779.1.204.1B	Screw		4
14	417.9.030.6A	Nut		1
15	0370.69.020	Gearchange control lever		1
16	848.5.002.1A	Ball joint		1
17	763106N01	El-stop nut		2
18	824.1.023.1AB	L.H. foot peg holder plate		1
19	779.1.205.1AB	Special screw		2
20	0000.59485	Washer		1
21	716.1.056.1A	Spacer		1
22	712.1.034.1A	Bush		1
23	848.5.001.1A	Ball joint		1
24	747.5.001.1A	L.H. nut		1
25	779.5.011.1A	Screw		1
26	821.1.170.1A	Pin		1
27	456.2.009.1A	Gearchange lever		1
28	765.1.001.1A	Rubber pad		1
29	464.1.018.1A	L.H. foot-rest		2
30	117.1.028.1A	Gearbox transmission rod		1
31	460.1.038.2B	R.H. protection		1
32	0670.72.010	Washer		4
33	60N101077	Screw		4
34	460.1.039.2B	L.H. protection		1
35	779.5.001.1A	Screw		1
36	0000.01199	O-ring		2
37	771.5.667.8B	Screw		1

CATALOGUE No: 915.1.102.2E
ISSUED: 02 - 05

DRAWING 032 SWINGARM AND CHAIN

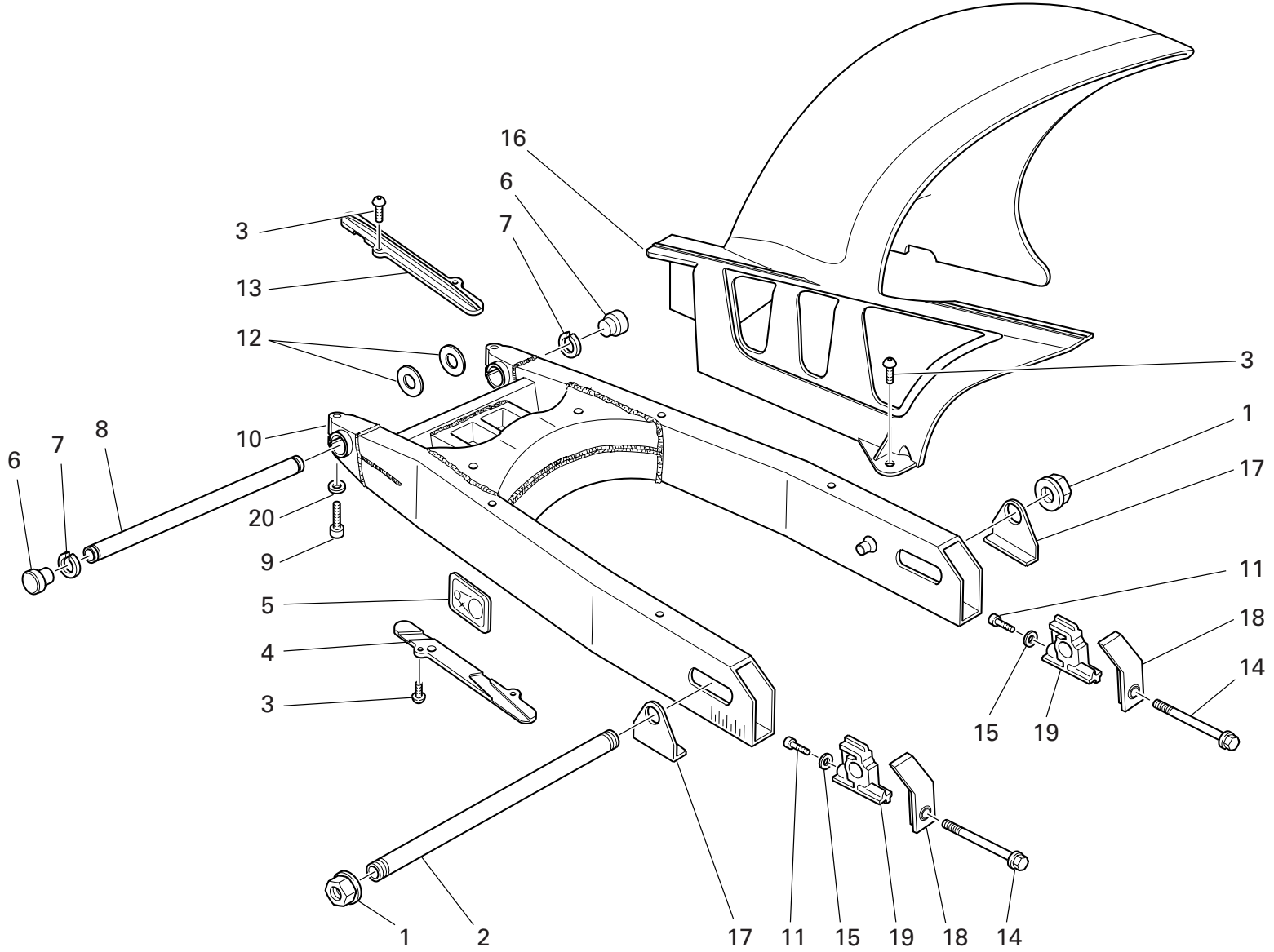

DRAWING 032 SWINGARM AND CHAIN

NOTES NO.	CODE NO.	DESCRIPTION	VALIDITY	Q.TY
1	748.1.023.1B	Nut		2
2	819.1.030.1A	Rear wheel spindle		1
3	779.1.119.2A	Screw		8
4	447.1.038.1A	Lower chain sliding shoe		1
5	433.1.290.1B	Chain adjustment sticker		1
6	872.1.019.1A	Cap		2
7	884.4.007.1A	Snap ring		2
8	369.1.004.1A	Swingarm pivot		1
9	60N102584	Screw		2
10	370.1.021.2C	Swingarm		1
11	771.5.004.2B	Screw		2
12	852.1.001.1A	Shim th. 1.8		2
12	852.1.002.1A	Shim th. 0.2		2
12	852.1.003.1A	Shim th. 0.1		1
13	447.1.037.1A	Upper chain sliding shoer		1
14	779.1.037.1B	Screw		2
15	852.1.079.1A	Washer		2
16	565.1.030.1A	Rear mudguard		1
17	373.1.029.1C	Plate		2
18	373.1.023.1B	Cover		2
19	373.1.028.1B	Sliding shoe		2
20	0670.92.190	Shim th. 2		2

NOTES NO.	CODE NO.	DESCRIPTION	VALIDITY	Q.TY

CATALOGUE No: 915.1.102.2E
ISSUED: 02 - 05

DRAWING 033 REAR SUSPENSION

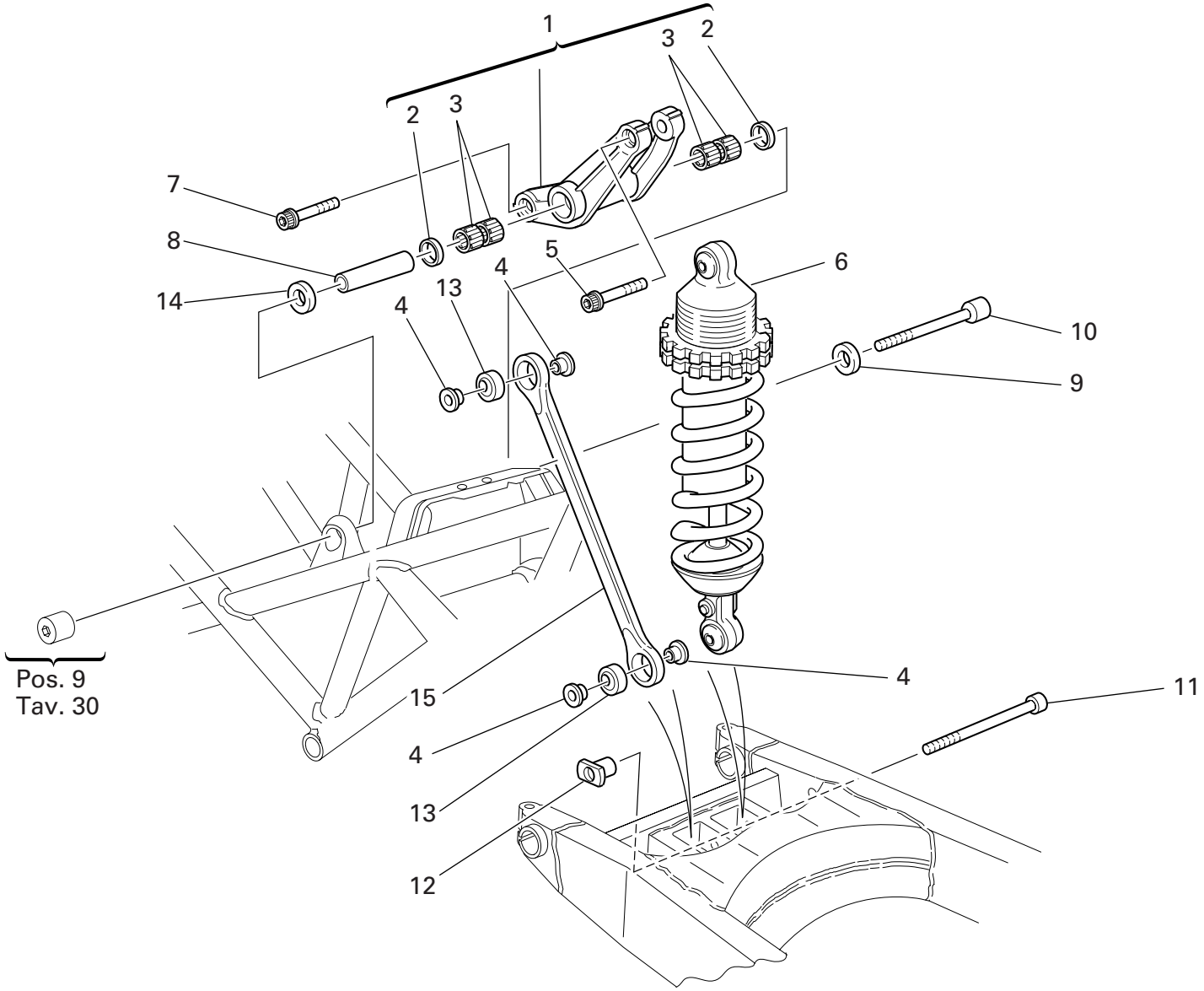

DRAWING 033 REAR SUSPENSION

NOTES NO.	CODE NO.	DESCRIPTION	VALIDITY	Q.TY
1	372.2.008.3A	Rocker assembly		1
2	93781.1824	Seal ring		2
3	701.4.006.1A	Needle bearing		4
4	710.1.025.1A	Bush		4
5	771.5.938.2B	Screw		1
6	365.2.045.1A	Shock absorber		1
7	771.5.937.2B	Screw		1
8	715.1.004.1A	Spacer		1
9	710.1.085.1A	Spacer		1
10	771.1.015.1A	Screw		1
11	771.1.016.1A	Screw		1
12	710.1.046.1A	Bush		1
13	848.4.011.1A	Ball joint		2
14	710.1.088.1A	Spacer		1
15	875.1.063.1A	Tie rod		1

CATALOGUE No: 915.1.102.2E
ISSUED: 02 - 05

DRAWING 034 AIR INDUCTIO AND OIL VENT

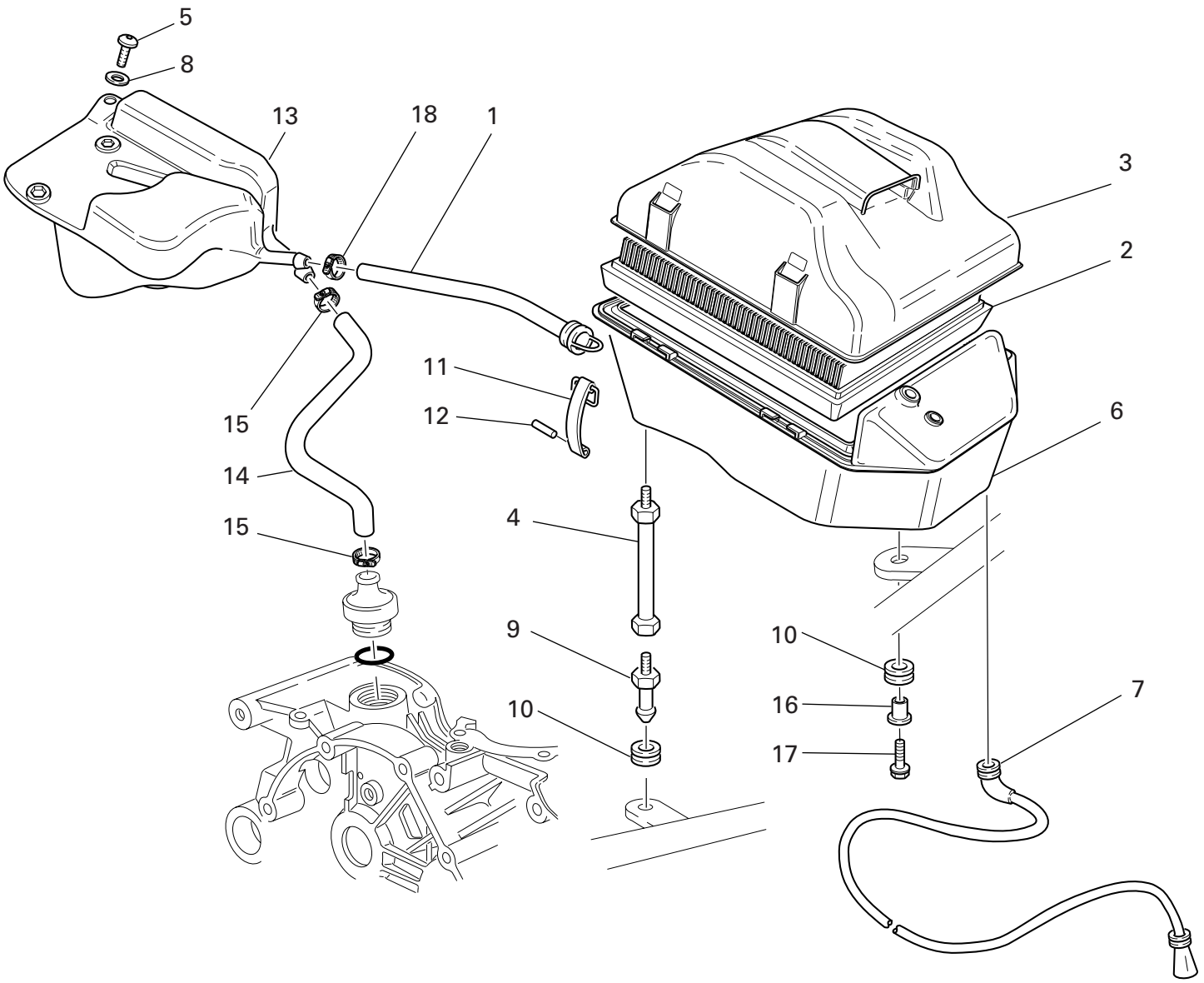

DRAWING 034 AIR INDUCTIO AND OIL VENT

NOTES NO.	CODE NO.	DESCRIPTION	VALIDITY	Q.TY
1	876.1.082.1A	Filter/fuel tank outlet pipe		1
2	426.1.010.1A	Filter element		1
3	246.2.011.1B	Filter case cover		1
4	684.1.026.1A	Stud bolt		2
5	60N102510	Screw		1
6	442.2.068.3A	Air filter box		1
7	877.2.002.1A	Tube		1
8	0670.72.010	Washer		1
9	821.1.075.1A	Pin		2
10	764.1.090.1A	Rubber pad		3
11	760.1.003.1B	Hook		4
12	74223.1045	Spring pin		4
13	585.1.031.1A	Oil breather tank		1
14	876.1.066.1A	Breather pipe		1
15	741.4.002.1A	Hose guide		2
16	716.1.022.1A	Spacer		1
17	772.5.023.1A	Screw		1
18	741.4.024.1A	Hose guide		1

CATALOGUE No: 915.1.102.2E
ISSUED: 02 - 05

DRAWING 035 FUEL TANK

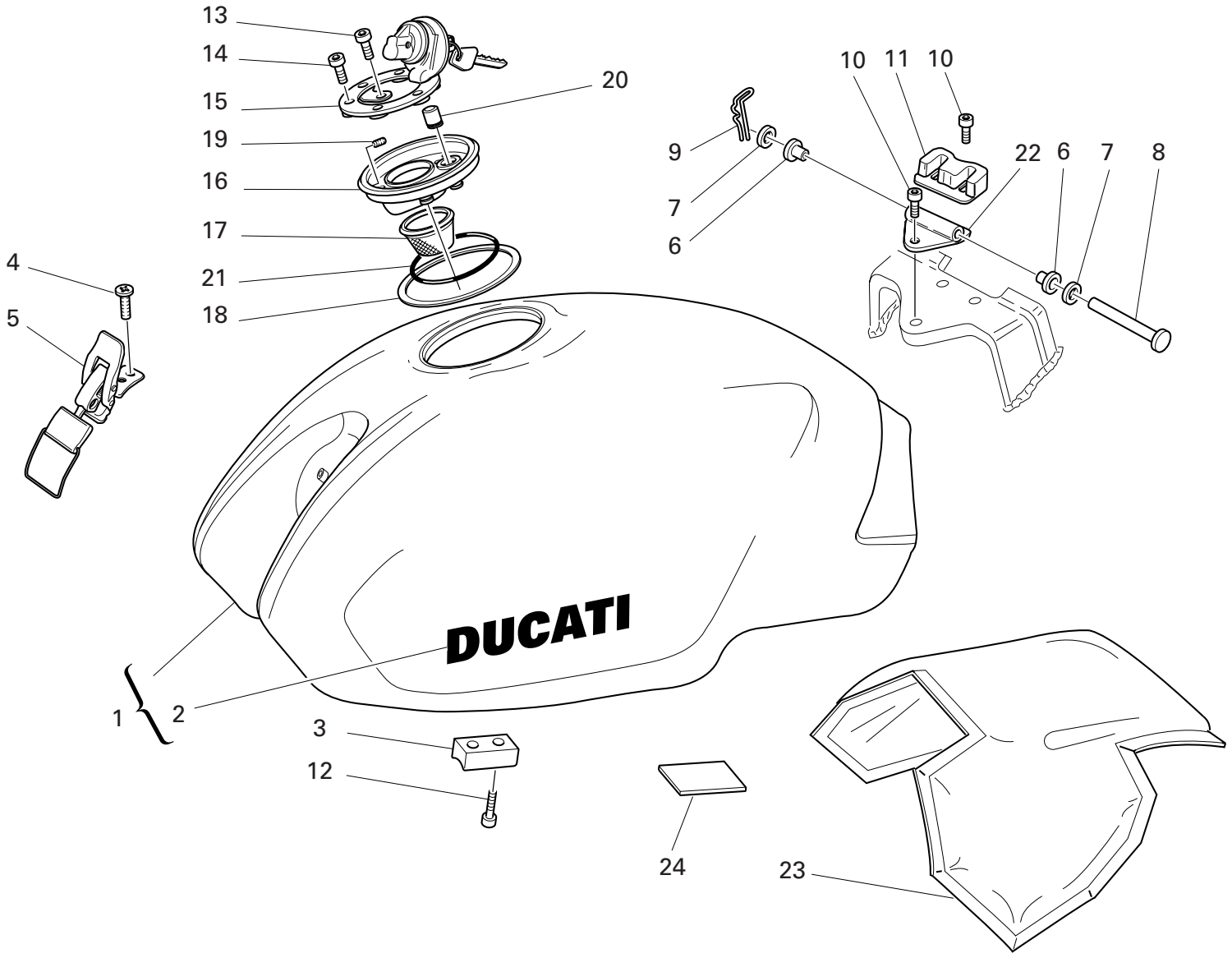

DRAWING 035 FUEL TANK

NOTES NO.	CODE NO.	DESCRIPTION	VALIDITY	Q.TY
1	586.1.037.2AA	Fuel tank (RED)		1
1	586.1.037.2AD	Fuel tank (METALLIC DARK GREY)		1
1	586.1.037.2AT	Fuel tank (BLACK)		1
2	435.1.097.1AA	Sticker "DUCATI" (for RED, BLACK, METALLIC DARK GREY, BLUE)		2
3	866.1.040.1A	Pad		2
4	777.5.019.7E	Screw		2
5	760.4.006.1B	Hook		1
6	712.1.013.3A	Bush		2
7	80C0.05893	Shim		2
8	821.1.028.2B	Pin		1
9	8000.62705	Split pin		1
10	60N102504	Screw		3
11	866.1.037.1A	Pad		1
12	779.5.004.1A	Screw		4
13	771.5.040.2B	Screw		1
14	771.5.045.7E	Screw		3
15	895.4.001.2A	Tank cap		1
16	160.1.013.1B	Flange		1
17	802.1.005.1A	Hose		1
18	791.1.015.1A	Gasket		1
19	779.5.007.1A	Screw		8
20	791.1.039.1A	Gasket		1
21	886.4.011.1A	O-Ring		1
22	80B0.62672	Bracket		1
23	486.1.056.1A	Panel (BLACK)		1
24	433.1.251.1A	Plate sticker		1

NOTES NO. CODE NO. DESCRIPTION VALIDITY Q.TY

CATALOGUE No: 915.1.102.2E
ISSUED: 02 - 05

DRAWING 036 FUEL SYSTEM

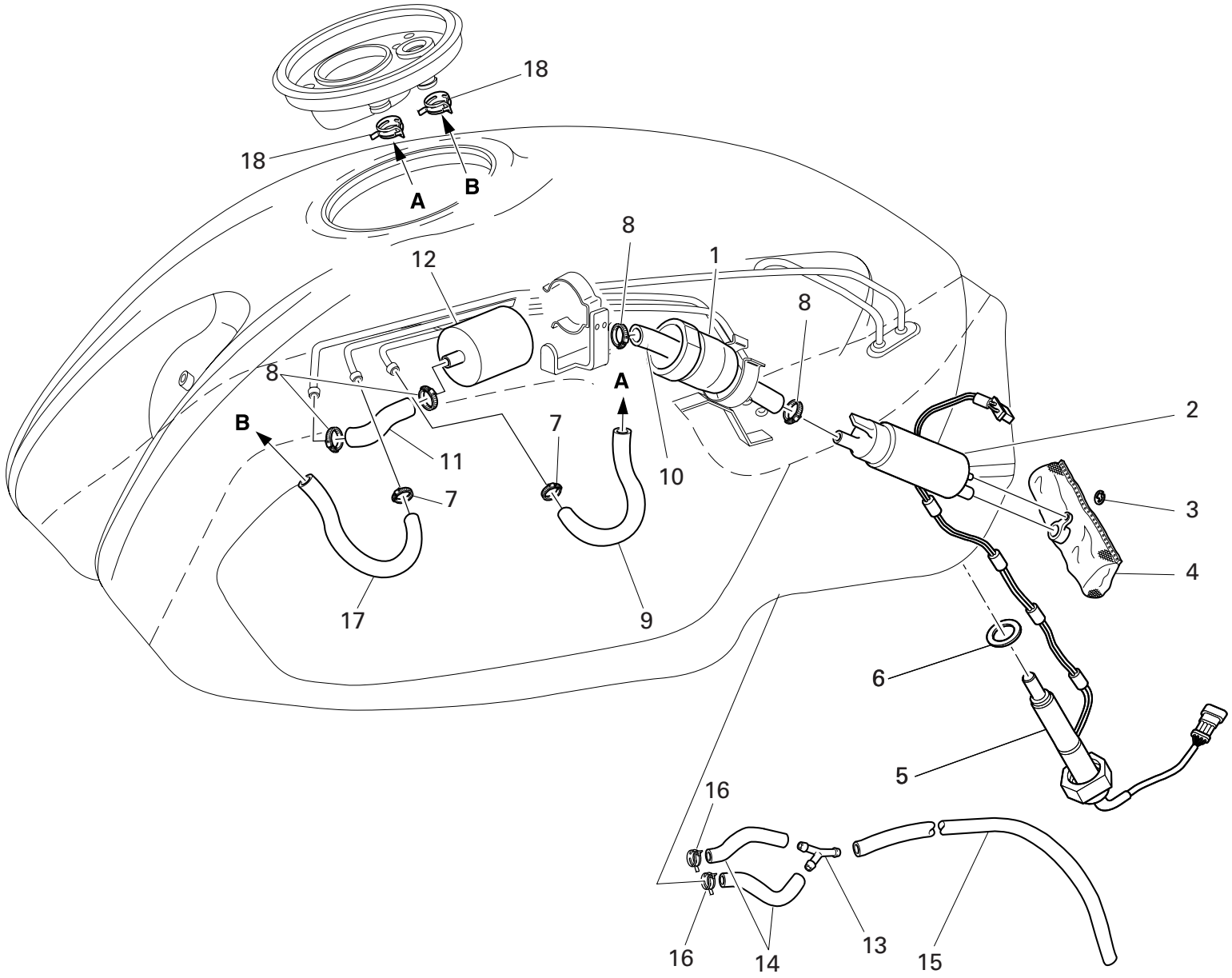

DRAWING 036 FUEL SYSTEM

NOTES NO.	CODE NO.	DESCRIPTION	VALIDITY	Q.TY
1	829.1.296.1A	Pump holder		1
2	430.4.004.1A	Fuel pump		1
3	884.4.012.1A	Circlip		1
4	425.4.008.1A	Fuel filter		1
5	592.1.015.2A	Low fuel sensor		1
6	789.1.001.1A	Gasket		1
7	741.4.008.2A	Hose guide		2
8	741.4.004.1A	Hose guide		4
9	590.1.158.1A	Tube		1
10	590.1.125.1A	Tube		1
11	590.1.157.1A	Tube		1
12	425.4.004.1B	Fuel filter		1
13	616.1.002.1A	Union		1
14	590.1.159.1A	Tube		2
15	590.1.207.1A	Tube		1
16	741.4.064.1A	Hose guide		2
17	590.1.178.1A	Tube		1
18	741.4.100.1A	Hose guide		2

NOTES NO.	CODE NO.	DESCRIPTION	VALIDITY	Q.TY

CATALOGUE No: 915.1.102.2E
ISSUED: 02 - 05

DRAWING 037 SEAT

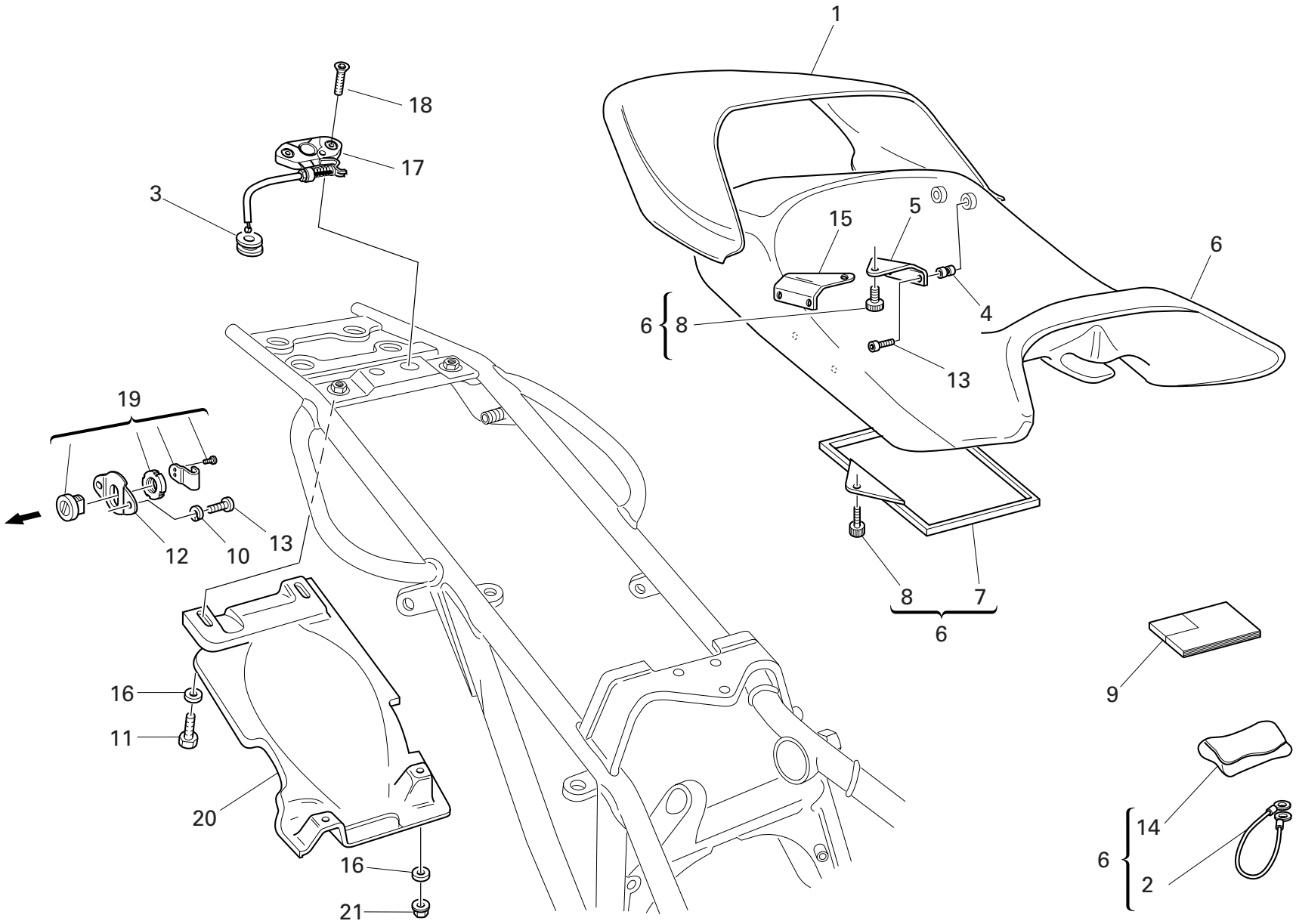

DRAWING 037 SEAT

NOTES NO.	CODE NO.	DESCRIPTION	VALIDITY	Q.TY
1	595.1.025.3BA	Cover (RED)		1
1	595.1.025.3BH	Cover (METALLIC DARK GREY)		1
1	595.1.025.3BT	Cover (BLACK)		1
2	732.1.007.1A	Helmet anti-theft wire		1
3	764.1.029.1A	Rubber pad		1
4	850.4.016.1A	Threaded insert		4
5	827.1.097.1A	L.H. plate		1
6	595.2.020.1D	Seat		1
7	247.1.086.1A	Cover		1
8	779.1.104.1A	Special screw		3
9	913.7.095.1B	Owner's manual		1
10	734005N01	Spring washer		2
11	60N101077	Screw		2
12	829.1.236.1A	Plate		1
13	60N102482	Screw		6
14	697.2.006.2B	Tool bag		1
15	827.1.096.1A	R.H. plate		1
16	0670.72.010	Washer		4
17	732.2.010.2A	Flexible cable		1
18	777.5.036.2B	Screw		2
19	598.4.019.1A	Seat lock		1
20	565.1.017.2A	Mudflap		1
21	729906FN1	Nut		2

NOTES NO.	CODE NO.	DESCRIPTION	VALIDITY	Q.TY

CATALOGUE No: 915.1.102.2E
ISSUED: 02 - 05

INDEX

CODE No.	Drwg.	POS. N.	CODE No.	Drwg.	POS. N.	CODE No.	Drwg.	POS. N.	CODE No.	Drwg.	POS. N.	CODE No.	Drwg.	POS. N.
0000.01199	29	40	0250.70.223	16	12	0619.50.065	12	17	0670.16.184	3	15	0723.92.505	015	16
0000.01199	31	36	0251.47.050	3	1	0619.92.180	14	8	0670.16.185	3	15	0723.92.506	014	19
0000.33552	27	11	0251.47.054	3	1	0619.92.180	15	8	0670.49.310	9	26	0723.92.506	015	16
0000.36230	23	15	0272.91.090	2	8	0647.70.010	14	12	0670.72.010	31	32	0723.92.507	014	19
0000.39727	29	32	0335.03.465	16	25	0647.70.010	15	20	0670.72.010	34	8	0723.92.507	015	16
0000.44099	23	8	0340.13.075	2	11	0659.37.040	26	19	0670.72.010	37	16	0723.92.508	014	19
0000.44099	30	3	0340.13.080	2	12	0659.38.226	22	15	0670.80.010	29	29	0723.92.508	015	16
0000.44240	23	9	0367.49.275	10	11	0660.13.060	2	19	0670.92.190	14	8	0723.92.509	014	19
0000.46664	28	6	0370.69.020	31	15	0660.13.070	2	13	0670.92.190	15	8	0723.92.509	015	16
0000.46665	27	5	0370.84.005	20	1	0660.13.143	2	9	0670.92.190	32	20	0723.92.510	014	19
0000.46665	28	9	0370.92.390	14	5	0660.13.165	2	25	0675.47.450	7	3	0723.92.510	015	16
0000.49654	27	2	0370.92.390	15	2	0660.47.040	6	13	0691.91.030	18	23	0723.92.511	014	19
0000.56525	19	13	0370.92.395	14	5	0660.47.230	6	8	0691.91.030	23	2	0723.92.511	015	16
0000.56803	18	11	0370.92.395	15	2	0660.47.290	6	6	0691.91.030	29	41	0723.92.512	014	19
0000.59485	29	12	0370.92.396	14	5	0660.49.268	10	13	0723.92.239	14	19	0723.92.512	015	16
0000.59485	31	20	0370.92.396	15	2	0660.50.020	12	8	0723.92.239	15	16	0723.92.513	014	19
0000.62729	16	20	0370.92.397	14	5	0660.92.310	13	18	0723.92.500	014	19	0723.92.513	015	16
0000.62729	20	23	0370.92.397	15	2	0665.49.680	5	8	0723.92.500	015	16	0723.92.514	014	19
0000.62730	20	19	0375.92.210	14	13	0670.16.145	3	7	0723.92.501	014	19	0723.92.514	015	16
0000.63150	18	20	0375.92.210	15	19	0670.16.150	3	3	0723.92.501	015	16	0723.92.515	014	19
0000.63150	30	22	0400.09.050	2	21	0670.16.155	3	19	0723.92.502	014	19	0723.92.515	015	16
0000.63161	30	20	0400.17.030	7	1	0670.16.163	3	11	0723.92.502	015	16	0723.92.516	014	19
0000.64471	25	10	0400.29.125	2	34	0670.16.164	3	15	0723.92.503	014	19	0723.92.516	015	16
0000.66527	18	5	0400.29.126	2	34	0670.16.165	3	15	0723.92.503	015	16	0723.92.517	014	19
0124.40.060	8	7	0400.49.240	11	18	0670.16.170	3	26	0723.92.504	014	19	0723.92.517	015	16
0170.91.730	31	5	0400.49.240	5	13	0670.16.171	3	26	0723.92.504	015	16	0723.92.518	014	19
0204.70.105	13	7	051.2.001.1A	1	10	0670.16.184	3	11	0723.92.505	014	19	0723.92.518	015	16

CATALOGUE No: 915.1.102.2E
ISSUED: 02 - 05

INDEX

CODE No.	Drwg.	POS. N.	CODE No.	Drwg.	POS. N.	CODE No.	Drwg.	POS. N.	CODE No.	Drwg.	POS. N.	CODE No.	Drwg.	POS. N.
0723.92.519	014	19	0723.92.533	015	16	0723.92.548	014	19	0723.92.605	015	16	0727.92.050	014	17
0723.92.519	015	16	0723.92.534	014	19	0723.92.548	015	16	0723.92.615	014	19	0727.92.050	015	14
0723.92.520	014	19	0723.92.534	015	16	0723.92.549	014	19	0723.92.615	015	16	0727.92.051	014	17
0723.92.520	015	16	0723.92.535	014	19	0723.92.549	015	16	0723.92.625	014	19	0727.92.051	015	14
0723.92.521	014	19	0723.92.535	015	16	0723.92.550	014	19	0723.92.625	015	16	0727.92.052	014	17
0723.92.521	015	16	0723.92.537	014	19	0723.92.550	015	16	0723.92.635	014	19	0727.92.052	015	14
0723.92.522	014	19	0723.92.537	015	16	0723.92.551	014	19	0723.92.635	015	16	0727.92.053	014	17
0723.92.522	015	16	0723.92.538	014	19	0723.92.551	015	16	0723.92.645	014	19	0727.92.053	015	14
0723.92.523	014	19	0723.92.538	015	16	0723.92.552	014	19	0723.92.645	015	16	0727.92.054	014	17
0723.92.523	015	16	0723.92.539	014	19	0723.92.552	015	16	0723.92.655	014	19	0727.92.054	015	14
0723.92.524	014	19	0723.92.539	015	16	0723.92.553	014	19	0723.92.655	015	16	0727.92.055	014	17
0723.92.524	015	16	0723.92.540	014	19	0723.92.553	015	16	0723.92.675	014	19	0727.92.055	015	14
0723.92.525	014	19	0723.92.540	015	16	0723.92.554	014	19	0723.92.675	015	16	0727.92.056	014	17
0723.92.525	015	16	0723.92.541	014	19	0723.92.554	015	16	0723.92.685	014	19	0727.92.056	015	14
0723.92.526	014	19	0723.92.541	015	16	0723.92.555	014	19	0723.92.685	015	16	0727.92.057	014	17
0723.92.526	015	16	0723.92.542	014	19	0723.92.555	015	16	0723.92.695	014	19	0727.92.057	015	14
0723.92.527	014	19	0723.92.542	015	16	0723.92.556	014	19	0723.92.695	015	16	0727.92.058	014	17
0723.92.527	015	16	0723.92.543	014	19	0723.92.556	015	16	0723.92.705	014	19	0727.92.058	015	14
0723.92.528	014	19	0723.92.543	015	16	0723.92.565	014	19	0723.92.705	015	16	0727.92.059	014	17
0723.92.528	015	16	0723.92.544	014	19	0723.92.565	015	16	0723.92.715	014	19	0727.92.059	015	14
0723.92.529	014	19	0723.92.544	015	16	0723.92.575	014	19	0723.92.715	015	16	0727.92.060	014	17
0723.92.529	015	16	0723.92.545	014	19	0723.92.575	015	16	0723.92.725	014	19	0727.92.060	015	14
0723.92.530	014	19	0723.92.545	015	16	0723.92.585	014	19	0723.92.725	015	16	0727.92.061	014	17
0723.92.530	015	16	0723.92.546	014	19	0723.92.585	015	16	0723.92.735	014	19	0727.92.061	015	14
0723.92.531	014	19	0723.92.546	015	16	0723.92.595	014	19	0723.92.735	015	16	0727.92.062	014	17
0723.92.531	015	16	0723.92.547	014	19	0723.92.595	015	16	0723.92.745	014	19	0727.92.062	015	14
0723.92.533	014	19	0723.92.547	015	16	0723.92.605	014	19	0723.92.745	015	16	0727.92.063	014	17

CATALOGUE No: 915.1.102.2E
ISSUED: 02 - 05

INDEX

CODE No.	Drwg.	POS. N.	CODE No.	Drwg.	POS. N.	CODE No.	Drwg.	POS. N.	CODE No.	Drwg.	POS. N.	CODE No.	Drwg.	POS. N.
0727.92.063	015	14	0727.92.077	014	17	0727.92.090	015	14	0727.92.157	014	17	0727.92.170	015	14
0727.92.064	014	17	0727.92.077	015	14	0727.92.091	014	17	0727.92.157	015	14	0727.92.171	014	17
0727.92.064	015	14	0727.92.078	014	17	0727.92.091	015	14	0727.92.158	014	17	0727.92.171	015	14
0727.92.065	014	17	0727.92.078	015	14	0727.92.092	014	17	0727.92.158	015	14	0727.92.172	014	17
0727.92.065	015	14	0727.92.079	014	17	0727.92.092	015	14	0727.92.159	014	17	0727.92.172	015	14
0727.92.066	014	17	0727.92.079	015	14	0727.92.093	014	17	0727.92.159	015	14	0727.92.173	014	17
0727.92.066	015	14	0727.92.080	014	17	0727.92.093	015	14	0727.92.160	014	17	0727.92.173	015	14
0727.92.067	014	17	0727.92.080	015	14	0727.92.094	014	17	0727.92.160	015	14	0727.92.174	014	17
0727.92.067	015	14	0727.92.081	014	17	0727.92.094	015	14	0727.92.161	014	17	0727.92.174	015	14
0727.92.068	014	17	0727.92.081	015	14	0727.92.095	014	17	0727.92.161	015	14	0727.92.175	014	17
0727.92.068	015	14	0727.92.082	014	17	0727.92.095	015	14	0727.92.162	014	17	0727.92.175	015	14
0727.92.069	014	17	0727.92.082	015	14	0727.92.096	014	17	0727.92.162	015	14	0727.92.176	014	17
0727.92.069	015	14	0727.92.083	014	17	0727.92.096	015	14	0727.92.163	014	17	0727.92.176	015	14
0727.92.070	014	17	0727.92.083	015	14	0727.92.150	014	17	0727.92.163	015	14	0727.92.177	014	17
0727.92.070	015	14	0727.92.084	014	17	0727.92.150	015	14	0727.92.164	014	17	0727.92.177	015	14
0727.92.071	014	17	0727.92.084	015	14	0727.92.151	014	17	0727.92.164	015	14	0727.92.178	014	17
0727.92.071	015	14	0727.92.085	014	17	0727.92.151	015	14	0727.92.165	014	17	0727.92.178	015	14
0727.92.072	014	17	0727.92.085	015	14	0727.92.152	014	17	0727.92.165	015	14	0727.92.179	014	17
0727.92.072	015	14	0727.92.086	014	17	0727.92.152	015	14	0727.92.166	014	17	0727.92.179	015	14
0727.92.073	014	17	0727.92.086	015	14	0727.92.153	014	17	0727.92.166	015	14	0727.92.180	014	17
0727.92.073	015	14	0727.92.087	014	17	0727.92.153	015	14	0727.92.167	014	17	0727.92.180	015	14
0727.92.074	014	17	0727.92.087	015	14	0727.92.154	014	17	0727.92.167	015	14	0727.92.181	014	17
0727.92.074	015	14	0727.92.088	014	17	0727.92.154	015	14	0727.92.168	014	17	0727.92.181	015	14
0727.92.075	014	17	0727.92.088	015	14	0727.92.155	014	17	0727.92.168	015	14	0727.92.182	014	17
0727.92.075	015	14	0727.92.089	014	17	0727.92.155	015	14	0727.92.169	014	17	0727.92.182	015	14
0727.92.076	014	17	0727.92.089	015	14	0727.92.156	014	17	0727.92.169	015	14	0727.92.183	014	17
0727.92.076	015	14	0727.92.090	014	17	0727.92.156	015	14	0727.92.170	014	17	0727.92.183	015	14

CATALOGUE No: 915.1.102.2E
ISSUED: 02 - 05

INDEX

CODE No.	Drwg.	POS. N.	CODE No.	Drwg.	POS. N.	CODE No.	Drwg.	POS. N.	CODE No.	Drwg.	POS. N.	CODE No.	Drwg.	POS. N.
0727.92.184	014	17	0755.29.025	8	20	149.1.033.1A	3	2	182.2.018.1A	2	18	245.1.048.1A	8	8
0727.92.184	015	14	0755.49.265	10	2	149.1.034.1A	3	25	184.1.001.1A	29	15	246.1.060.2A	30	25
0727.92.185	014	17	0759.49.280	9	15	150.2.061.1A	3	27	190.2.009.2B	4	7	246.1.061.1D	18	26
0727.92.185	015	14	0765.92.185	14	8	150.2.062.1A	3	28	194.2.003.1A	4	5	246.2.011.1B	34	3
0727.92.186	014	17	0765.92.185	15	8	158.2.018.1A	6	5	195.4.002.1A	28	3	247.1.002.1BC	11	9
0727.92.186	015	14	0765.92.190	14	8	160.1.013.1B	35	16	195.4.003.1A	4	19	247.1.083.1AE	11	4
0727.92.187	014	17	0765.92.190	15	8	160.1.049.1B	25	21	196.1.016.3A	4	10	247.1.086.1A	37	7
0727.92.187	015	14	0765.92.205	14	8	160.1.057.1A	12	13	208.1.012.4A	14	14	254.1.001.1A	11	7
0727.92.188	014	17	0765.92.205	15	8	160.1.076.1A	13	17	208.1.012.4A	15	17	254.4.001.1A	5	4
0727.92.188	015	14	0765.92.205	2	21	170.2.022.1C	4	12	209.1.012.4A	14	16	255.1.001.1B	8	13
0727.92.189	014	17	0796.38.305	22	11	171.2.020.2B	8	10	209.1.012.4A	15	18	255.1.014.1A	13	3
0727.92.189	015	14	0797.41.090	22	22	172.1.108.1A	3	10	210.1.056.1A	14	22	264.4.014.3B	11	1
0727.92.190	014	17	0799.13.110	2	27	172.1.109.1A	3	8	210.1.056.1A	15	6	270.4.001.1A	12	1
0727.92.190	015	14	0803.77.010	25	12	172.1.110.1A	3	5	211.1.051.1A	14	21	276.1.025.1B	12	16
0727.92.191	014	17	0805.17.125	7	7	172.1.111.1A	3	9	211.1.051.1A	15	7	280.4.007.1A	16	10
0727.92.191	015	14	117.1.028.1A	31	30	172.1.112.1A	3	18	220.3.208.3A	9	16	282.4.060.2A	16	1
0727.92.192	014	17	117.2.007.1A	4	16	172.1.113.1A	3	24	225.2.088.1A	10	1	283.4.003.1A	16	21
0727.92.192	015	14	117.2.049.1A	30	14	172.1.114.1A	3	22	235.1.026.1A	13	11	284.4.002.1A	16	2
0727.92.193	014	17	120.2.095.1A	7	4	172.1.115.1A	3	21	235.1.027.1A	13	5	286.4.088.1C	18	1
0727.92.193	015	14	120.2.096.1A	7	8	172.1.116.1A	3	20	235.2.031.1A	13	20	287.4.024.1B	16	8
0727.92.194	014	17	121.2.039.1A	7	11	172.1.117.1A	3	23	240.1.010.1AB	14	10	301.2.172.1A	15	1
0727.92.194	015	14	122.2.119.1A	7	9	173.1.012.3A	12	20	240.1.010.1AB	15	12	301.2.173.1A	14	1
0727.92.195	014	17	140.2.027.1A	16	11	174.1.025.2A	9	12	240.1.028.1A	15	24	303.1.003.1A	14	4
0727.92.195	015	14	146.2.092.1A	6	1	174.2.025.6A	9	1	242.2.045.2A	11	19	303.1.003.1A	15	3
0727.92.239	14	17	147.1.015.1A	8	4	176.1.001.1A	12	6	243.1.029.1A	5	17	303.1.003.1AB	14	4
0727.92.239	15	14	148.1.146.1A	13	22	176.1.009.1A	12	10	243.2.028.3AC	5	1	303.1.003.1AB	15	3
0755.29.025	6	14	148.1.147.1A	13	16	180.1.008.1A	2	24	245.1.047.1A	8	2	303.1.003.1AC	14	4

CATALOGUE No: 915.1.102.2E
ISSUED: 02 - 05

INDEX

CODE No.	Drwg.	POS. N.	CODE No.	Drwg.	POS. N.	CODE No.	Drwg.	POS. N.	CODE No.	Drwg.	POS. N.	CODE No.	Drwg.	POS. N.
303.1.003.1AC	15	3	350.1.014.1A	24	15	420.2.001.0A	2	5	464.1.017.1A	31	7	514.1.038.1A	1c	14
303.1.003.1AD	14	4	350.1.015.1A	24	5	425.4.004.1B	36	12	464.1.018.1A	31	29	514.1.043.1A	19	3
303.1.003.1AD	15	3	360.1.033.1B	26	24	425.4.008.1A	36	4	470.1.056.3AA	30	1	516.4.003.1B	18	14
304.1.024.1A	14	2	360.1.035.1A	26	16	426.1.010.1A	34	2	470.1.056.3AB	30	1	518.4.004.1B	30	6
304.1.024.1A	15	5	365.2.045.1A	33	6	430.4.004.1A	36	2	470.1.056.3AF	30	1	520.4.007.1C	22	1
304.1.024.1AB	14	2	369.1.004.1A	32	8	433.1.251.1A	35	24	470.1.062.1A	21	5	521.4.005.1A	22	3
304.1.024.1AB	15	5	370.1.021.2C	32	10	433.1.277.1B	18	6	482.1.119.1B	30	12	523.4.014.1A	26	8
304.1.024.1AC	14	2	372.2.008.3A	33	1	433.1.290.1B	32	5	482.1.120.1B	30	7	523.4.015.1A	26	9
304.1.024.1AC	15	5	373.1.023.1B	32	18	435.1.097.1AA	35	2	486.1.051.1A	5	6	525.1.004.3A	23	5
304.1.025.1A	14	3	373.1.028.1B	32	19	436.1.146.1B	30	21	486.1.056.1A	35	23	525.4.007.3A	23	3
304.1.025.1A	15	4	373.1.029.1C	32	17	442.2.068.3A	34	6	492.4.003.2A	25	15	526.4.003.1A	23	4
304.1.025.1AB	14	3	380.4.004.1B	18	16	444.4.003.4A	9	20	492.4.024.1A	25	5	529.1.009.1A	23	19
304.1.025.1AB	15	4	389.4.006.1A	18	27	447.1.037.1A	32	13	494.1.101.1A	25	23	530.4.007.3A	22	9
304.1.025.1AC	14	3	389.4.007.1A	18	27	447.1.038.1A	32	4	497.2.001.2A	25	2	530.4.008.3A	22	16
304.1.025.1AC	15	4	389.4.008.1A	18	27	449.1.043.2A	3	12	501.2.080.1AB	25	1	530.4.009.3A	23	14
341.1.030.1C	26	23	389.4.010.1A	18	27	451.1.025.1A	8	16	501.2.080.1AE	25	1	530.4.010.3A	23	10
342.2.015.1C	26	3	389.4.013.1A	18	27	451.2.017.1A	8	17	502.2.110.1AB	25	13	539.1.021.1A	2	6
344.2.010.2A	24	13	389.4.014.1A	18	15	455.2.003.1A	2	4	502.2.110.1AE	25	13	539.1.023.2A	17	5
345.2.010.2A	24	11	389.4.016.1A	18	27	456.2.009.1A	31	27	510.1.075.1A	22	5	539.4.003.1B	29	13
347.2.004.1A	24	12	390.4.003.1A	23	22	457.2.007.1A	29	9	510.1.076.1B	23	11	539.4.004.1B	28	5
348.2.012.1A	24	7	395.2.013.1C	19	14	460.1.038.2B	31	31	510.1.179.4A	18	3	539.4.030.1A	5	21
349.1.107.1A	24	14	397.4.002.1A	19	4	460.1.039.2B	31	34	514.1.032.1A	1c	9	539.4.034.1A	27	13
349.1.152.1A	24	6	406.1.026.1A	21	1	460.1.076.2A	26	11	514.1.033.1A	1c	13	540.4.010.1A	18	8
349.1.157.1A	24	16	417.9.030.6A	29	10	462.4.037.6A	19	1	514.1.034.1A	1c	12	541.4.007.1A	18	4
349.2.019.1A	24	8	417.9.030.6A	31	14	463.2.019.6A	7	2	514.1.035.1A	1c	10	552.1.037.1A	1c	4
349.2.020.1A	24	10	417.9.030.8A	26	1	463.2.022.2A	16	14	514.1.036.1A	1c	10	552.1.038.1A	1c	5
349.2.021.1A	24	9	417.9.050.6A	19	2	463.4.001.1A	10	22	514.1.037.1A	1c	6	552.1.039.1A	1c	7

CATALOGUE No: 915.1.102.2E
ISSUED: 02 - 05

INDEX

CODE No.	Drwg.	POS. N.	CODE No.	Drwg.	POS. N.	CODE No.	Drwg.	POS. N.	CODE No.	Drwg.	POS. N.	CODE No.	Drwg.	POS. N.
552.1.040.1A	1c	11	586.1.037.2AD	35	1	60N102482	18	28	626.4.007.1C	27	4	700.1.005.1A	25	18
552.1.045.2A	9	3	586.1.037.2AT	35	1	60N102482	37	13	626.4.013.1A	29	26	700.1.027.1A	14	29
552.4.013.1A	15	32	590.1.084.1A	16	18	60N102504	35	10	626.4.023.1A	28	11	700.1.027.1A	15	33
552.4.020.1A	11	12	590.1.104.1A	16	16	60N102510	22	10	626.4.025.1A	27	3	700.1.031.1A	19	10
552.4.028.1A	1b	15	590.1.125.1A	36	10	60N102510	34	5	626.4.029.1A	27	7	700.1.038.1A	21	7
552.4.031.1A	21	4	590.1.154.1A	16	7	60N102557	26	7	630.4.022.1A	27	1	700.1.049.1A	31	1
552.4.037.1A	29	35	590.1.157.1A	36	11	60N102584	32	9	631.4.004.1A	28	19	701.4.003.1A	12	19
556.1.018.1C	17	9	590.1.158.1A	36	9	60N107335	22	2	631.4.008.1A	29	25	701.4.005.1A	3	4
556.1.024.1A	17	3	590.1.159.1A	36	14	60N107335	4	20	632.1.031.1A	27	6	701.4.006.1A	33	3
556.2.027.1A	17	1	590.1.162.1A	16	17	610.4.065.1A	28	22	650.4.008.1B	26	25	701.4.007.1A	12	21
561.1.017.1B	23	20	590.1.178.1A	36	17	610.4.066.1A	28	18	651.4.011.1A	26	14	702.4.004.1A	26	6
561.1.018.1A	23	1	590.1.189.1A	1c	1	611.4.022.1A	29	20	652.4.006.1A	30	23	702.4.020.1A	10	25
564.1.029.2BA	30	16	590.1.190.1A	1c	2	612.4.005.1A	27	12	654.2.003.1A	26	20	702.4.040.1A	10	9
564.1.029.2BG	30	16	590.1.207.1A	36	15	612.4.008.1A	28	7	656.1.036.2A	26	26	702.4.069.1A	8	19
564.1.029.2BT	30	16	592.1.015.2A	36	5	612.4.008.1A	29	31	657.1.015.1A	26	18	702.5.008.1A	10	20
565.1.017.2A	37	20	593.1.003.1B	10	33	612.4.013.1B	29	30	658.4.002.1B	26	29	702.5.008.1A	11	3
565.1.026.2A	23	12	593.1.018.1A	9	29	612.4.014.1A	28	16	669.1.003.1A	14	18	702.5.008.1A	4	6
565.1.030.1A	32	16	595.1.025.3BA	37	1	612.4.017.1A	28	15	669.1.003.1A	15	15	702.5.015.1A	4	14
570.1.065.2A	20	5	595.1.025.3BH	37	1	613.4.020.1A	28	17	670.4.008.1A	18	13	703.1.013.1A	26	12
571.1.065.2A	20	6	595.1.025.3BT	37	1	613.4.073.1A	29	33	672.1.013.1A	18	21	703.1.019.1A	15	30
573.1.050.2D	20	12	595.2.020.1D	37	6	616.1.002.1A	36	13	672.1.034.1A	15	34	70620.5212	16	26
573.1.050.3D	20	12	598.2.030.1A	30	11	618.4.066.1A	28	14	676.2.057.1A	25	24	707006N02	29	21
574.1.050.2D	20	16	598.4.016.1A	30	24	619.4.030.1A	29	3	676.4.032.2A	25	16	710.1.001.1A	9	13
574.1.050.3D	20	16	598.4.018.1A	30	10	624.4.037.1A	28	1	677.4.003.1A	1a	4	710.1.025.1A	33	4
585.1.031.1A	34	13	598.4.019.1A	37	19	625.4.005.1AB	29	17	684.1.026.1A	34	4	710.1.041.1C	25	22
585.4.001.1A	29	23	60N101077	31	33	626.1.002.1A	28	2	697.2.006.2B	37	14	710.1.046.1A	33	12
586.1.037.2AA	35	1	60N101077	37	11	626.4.003.1A	28	10	698.1.033.1A	1c	15	710.1.069.1A	10	21

CATALOGUE No: 915.1.102.2E
ISSUED: 02 - 05

INDEX

CODE No.	Drwg.	POS. N.	CODE No.	Drwg.	POS. N.	CODE No.	Drwg.	POS. N.	CODE No.	Drwg.	POS. N.	CODE No.	Drwg.	POS. N.
710.1.070.1A	10	30	714.1.046.1A	25	14	73503.3380	10	18	747.5.001.1A	31	24	758.1.014.1A	22	14
710.1.085.1A	33	9	715.1.004.1A	33	8	73503.3380	11	2	748.1.014.1C	25	26	759.1.006.1A	19	6
710.1.088.1A	33	14	71502.2594	24	1	73503.3380	13	4	748.1.023.1B	32	1	760.1.003.1B	34	11
711.1.090.1A	20	20	716.1.022.1A	22	13	73503.3449	16	22	748.1.039.1A	16	15	760.4.006.1B	35	5
711.1.095.1A	10	32	716.1.022.1A	34	16	73503.3683	13	13	748.1.040.1A	2	23	76266.2668	10	4
711.1.128.1A	10	39	716.1.055.1A	20	10	737.4.007.2A	8	14	748.1.050.1A	10	8	763106N01	31	17
712.1.013.3A	35	6	716.1.056.1A	31	21	741.1.012.1A	18	22	748.4.002.1A	30	17	764.1.001.1A	20	9
712.1.034.1A	31	22	72094.1616	10	10	741.1.028.1A	20	8	748.4.024.1A	25	20	764.1.009.1A	14	20
713.1.007.1A	13	9	72121.2106	6	4	741.4.002.1A	34	15	748.4.026.1B	21	6	764.1.009.1A	15	21
713.1.011.1A	3	15	723.1.003.1A	22	4	741.4.004.1A	16	5	748.4.033.1A	20	4	764.1.013.1A	14	6
713.1.014.1A	3	11	72465.0214	28	4	741.4.004.1A	36	8	748.4.100.1AB	23	16	764.1.013.1A	15	22
713.1.014.1A	3	15	72944.1542	13	1	741.4.008.2A	36	7	749.4.002.1A	30	28	764.1.015.1B	30	4
713.1.014.1B	3	11	72944.1542	8	11	741.4.024.1A	34	18	749.4.045.2G	17	10	764.1.024.1A	20	3
713.1.014.1E	3	11	729906FN1	20	15	741.4.038.1A	18	24	749.5.001.1A	23	17	764.1.029.1A	19	7
713.1.014.1E	3	15	729906FN1	30	8	741.4.040.1A	16	9	749.5.002.1A	18	19	764.1.029.1A	30	2
713.1.014.1F	3	11	729906FN1	37	21	741.4.041.1A	16	6	750.1.007.1A	4	8	764.1.029.1A	37	3
713.1.082.1A	20	22	732.1.007.1A	37	2	741.4.042.1A	16	3	750.1.012.2A	6	16	764.1.084.1A	23	7
713.1.097.1C	25	25	732.2.010.2A	37	17	741.4.043.1A	29	4	750.1.060.1A	30	9	764.1.090.1A	22	12
713.1.119.1A	4	15	734005N01	37	10	741.4.062.1A	29	34	750.1.121.1A	12	3	764.1.090.1A	34	10
713.1.137.1A	15	27	734008N01	29	28	741.4.064.1A	36	16	750.5.001.1A	22	17	76400.0004	10	3
713.1.140.1A	10	14	734305N01	18	25	741.4.067.1A	16	28	75120.1747	13	8	76402.0002	3	17
713.1.192.1A	29	37	734306N01	11	25	741.4.100.1A	36	18	75120.2567	10	12	765.1.001.1A	29	8
713.1.241.1A	14	25	734306N01	22	23	74172.1008	13	15	75162.2566	25	4	765.1.001.1A	31	28
713.1.241.1A	5	18	734406N01	29	38	74172.1008	6	10	75162.3075	25	17	766.1.048.1A	10	6
713.1.266.1A	3	15	73500.1440	12	11	74172.1008	8	3	75173.1542	13	19	766.4.017.2A	13	12
714.1.028.1A	25	3	73500.1542	2	15	74223.1045	34	12	75191.3380	10	29	766.4.018.1A	13	23
714.1.045.1A	25	9	73500.1747	15	26	74224.0570	6	7	75794.1542	10	17	76835.1134	2	10

CATALOGUE No: 915.1.102.2E
ISSUED: 02 - 05

INDEX

CODE No.	Drwg.	POS. N.	CODE No.	Drwg.	POS. N.	CODE No.	Drwg.	POS. N.	CODE No.	Drwg.	POS. N.	CODE No.	Drwg.	POS. N.
770.5.250.8B	10	15	771.5.071.8B	11	17	772.5.012.1A	23	21	779.1.162.2A	9	27	779.5.056.1A	26	17
771.1.015.1A	33	10	771.5.072.2B	18	2	772.5.023.1A	26	28	779.1.182.2A	10	36	780.1.007.1A	20	7
771.1.016.1A	33	11	771.5.072.8B	10	31	772.5.023.1A	29	18	779.1.198.2A	9	23	780.1.015.1A	6	3
771.5.004.2B	32	11	771.5.072.8B	5	7	772.5.023.1A	34	17	779.1.203.2A	2	7	780.1.018.1A	9	7
771.5.040.2B	35	13	771.5.073.2B	18	10	773.1.001.1A	5	19	779.1.204.1B	31	13	780.1.037.1A	10	35
771.5.040.8B	11	21	771.5.073.8B	11	16	775.1.002.1A	30	19	779.1.205.1AB	31	19	780.2.047.1A	9	17
771.5.040.8B	13	6	771.5.078.8B	12	12	775.1.003.1A	21	3	779.1.206.1AB	31	3	780.5.001.1A	5	24
771.5.043.8B	4	1	771.5.080.8B	10	27	775.1.013.1A	18	18	779.1.213.1A	30	13	786.1.095.1A	7	6
771.5.045.7E	35	14	771.5.081.8B	5	3	775.1.033.1A	16	30	779.1.214.1B	21	2	787.1.008.1A	15	29
771.5.064.2B	11	5	771.5.083.8B	5	2	776.5.032.8A	16	13	779.1.221.1A	30	27	787.1.011.1A	10	19
771.5.064.8B	8	21	771.5.123.8B	2	30	776.5.307.2A	28	8	779.1.247.1A	20	18	788.1.032.2A	14	9
771.5.065.8B	13	10	771.5.125.2C	29	27	777.5.019.7E	35	4	779.1.296.2A	10	41	788.1.032.2A	15	11
771.5.065.8B	23	6	771.5.129.8B	9	8	777.5.036.2B	37	18	779.1.311.1A	25	6	788.1.054.1A	12	4
771.5.066.8B	11	24	771.5.136.8B	10	24	777.5.049.8B	11	10	779.1.366.1AB	27	9	788.1.076.1A	11	22
771.5.066.8B	13	21	771.5.154.8B	17	2	779.1.007.2A	6	9	779.1.366.1AB	28	13	788.1.076.1AA	11	22
771.5.067.8B	11	13	771.5.431.8B	28	20	779.1.026.2A	10	40	779.1.366.1AB	29	1	788.1.076.1AB	11	22
771.5.067.8B	14	11	771.5.665.2B	29	36	779.1.029.2A	10	26	779.1.397.1A	27	10	789.1.001.1A	36	6
771.5.067.8B	15	13	771.5.667.8B	22	6	779.1.037.1B	32	14	779.1.399.1A	25	7	791.1.015.1A	35	18
771.5.067.8B	18	9	771.5.667.8B	31	37	779.1.039.1A	2	3	779.1.415.1A	28	23	791.1.039.1A	35	20
771.5.067.8B	2	28	771.5.725.8B	26	22	779.1.054.1AA	29	7	779.4.005.2A	17	4	791.2.034.1A	7	5
771.5.067.8B	8	1	771.5.727.8B	26	31	779.1.088.1A	19	8	779.4.075.1A	11	14	799.1.025.1A	2	20
771.5.069.8B	11	6	771.5.937.2B	33	7	779.1.099.1A	26	2	779.5.001.1A	31	35	799.1.044.1A	29	6
771.5.069.8B	12	5	771.5.938.2B	33	5	779.1.104.1A	37	8	779.5.003.1A	20	11	799.1.049.1A	2	1
771.5.069.8B	14	26	772.1.010.3A	8	9	779.1.109.1A	6	2	779.5.004.1A	35	12	799.1.051.2A	6	15
771.5.069.8B	5	5	772.1.063.1A	30	15	779.1.119.2A	32	3	779.5.007.1A	35	19	799.1.055.1A	9	5
771.5.069.8B	8	5	772.5.004.1A	26	10	779.1.133.1A	14	24	779.5.011.1A	31	25	799.1.058.1A	26	13
771.5.069.8B	9	10	772.5.008.1A	18	7	779.1.133.1A	15	25	779.5.056.1A	22	18	799.1.061.1A	14	7

CATALOGUE No: 915.1.102.2E
ISSUED: 02 - 05

INDEX

CODE No.	Drwg.	POS. N.	CODE No.	Drwg.	POS. N.	CODE No.	Drwg.	POS. N.	CODE No.	Drwg.	POS. N.	CODE No.	Drwg.	POS. N.
799.1.061.1A	15	9	821.1.054.1A	19	5	829.1.275.1A	20	17	852.1.065.1A	31	11	852.1.124.2A	13	14
799.1.088.1A	17	7	821.1.070.1A	2	17	829.1.283.1B	19	11	852.1.079.1A	32	15	852.1.172.1A	2	29
799.1.089.1A	17	6	821.1.075.1A	34	9	829.1.285.1A	19	12	852.1.093.1A	2	14	852.1.173.1A	13	2
799.1.099.1A	4	4	821.1.090.1A	31	4	829.1.296.1A	36	1	852.1.094.1A	2	19	852.1.173.1A	8	12
799.1.252.1A	31	12	821.1.115.1A	14	15	829.1.358.1A	14	27	852.1.099.1A	31	2	852.1.174.1A	2	31
8000.59056	29	14	821.1.115.1A	15	10	830.1.091.2A	16	19	852.1.103.1A	26	4	852.1.176.1A	14	28
8000.60700	31	6	821.1.170.1A	29	5	830.1.144.1A	11	20	852.1.104.1A	6	11	852.1.176.1A	20	13
8000.62586	29	19	821.1.170.1A	31	26	830.1.194.1A	22	8	852.1.104.1B	6	11	852.1.176.1A	5	16
8000.62705	35	9	824.1.023.1AB	31	18	830.1.195.1A	22	20	852.1.104.1C	6	11	852.1.195.1A	5	20
8000.66526	18	12	824.1.024.1AB	31	8	830.1.228.1A	19	9	852.1.104.1D	6	11	852.1.195.1A	9	28
8000.66774	26	27	825.1.030.1A	29	24	841.1.017.1A	22	19	852.1.104.1E	6	11	852.1.196.1A	20	14
8000.70127	24	4	826.1.009.1A	2	33	841.1.031.1A	4	2	852.1.104.1F	6	11	852.5.001.1A	23	18
8000.70139	1a	2	826.1.011.1A	3	13	847.4.002.1A	31	9	852.1.104.1G	6	11	852.5.005.1A	9	18
8000.78345	26	15	827.1.096.1A	37	15	848.4.011.1A	33	13	852.1.104.1H	6	11	852.5.023.1A	14	23
801.1.027.1A	16	4	827.1.097.1A	37	5	848.5.001.1A	31	23	852.1.104.1I	6	11	852.5.023.1A	15	23
802.1.005.1A	35	17	827.1.139.2B	17	8	848.5.002.1A	31	16	852.1.104.1J	6	11	852.5.024.1A	20	21
80A0.62649	20	2	827.1.161.1A	31	10	850.1.005.1A	29	11	852.1.104.1K	6	11	852.5.024.1A	27	8
80B0.62672	35	22	827.1.191.4A	23	13	850.4.016.1A	37	4	852.1.104.1L	6	11	852.5.024.1A	28	12
80C0.05893	35	7	827.1.211.1A	30	26	851.1.004.1A	4	9	852.1.104.1M	6	11	852.5.024.1A	29	2
814.1.114.1A	1c	8	827.1.236.1A	18	17	851.1.013.1A	8	6	852.1.104.1N	6	11	852.5.024.1A	5	23
815.1.028.1A	9	21	827.1.241.1A	16	27	851.1.019.1A	6	12	852.1.105.1AB	3	26	852.5.024.1A	9	2
818.1.010.1B	4	3	827.1.367.1B	16	29	852.1.001.1A	32	12	852.1.105.1AD	3	26	852.5.025.1A	10	42
819.1.017.1B	25	8	829.1.099.1D	22	7	852.1.002.1A	32	12	852.1.105.1AG	3	26	852.5.026.1A	10	37
819.1.030.1A	32	2	829.1.134.1A	10	38	852.1.003.1A	32	12	852.1.108.1AH	3	1	853.1.002.1A	9	9
821.1.001.1A	2	26	829.1.141.1B	28	21	852.1.005.1A	2	14	852.1.108.1AL	3	1	853.1.003.1A	11	27
821.1.028.2B	35	8	829.1.235.1A	15	31	852.1.008.1A	5	10	852.1.108.1AN	3	1	853.1.003.1A	12	2
821.1.039.1B	25	19	829.1.236.1A	37	12	852.1.053.2A	2	2	852.1.120.1A	9	6	853.1.004.1A	9	11

CATALOGUE No: 915.1.102.2E
ISSUED: 02 - 05

INDEX

CODE No.	Drwg.	POS. N.	CODE No.	Drwg.	POS. N.	CODE No.	Drwg.	POS. N.	CODE No.	Drwg.	POS. N.	CODE No.	Drwg.	POS. N.
856.1.001.1A	3	6	881.1.030.1A	5	22	88713.0137	1	11	88713.2362	1	32	88765.1126R	1b	3
856.1.002.2A	8	15	881.1.035.1A	22	21	88713.0262	1	29	88713.2676	1	2	88765.1126S	1b	22
856.1.014.1A	4	11	882.1.003.1A	8	22	88713.0844	1	33	88765.0999	1	16	88765.1126T	1b	23
856.1.031.1A	3	16	882.1.006.1A	2	16	88713.0874	1	6	88765.1000	1	15	88765.1126T	1c	16
856.1.042.1A	30	5	882.1.012.1A	12	15	88713.0875	1	8	88765.1005	1	15	88765.1126U	1b	20
856.1.057.1A	24	2	884.4.007.1A	32	7	88713.0879	1	7	88765.1006	1	15	88765.1126V	1b	8
856.1.064.2A	10	7	884.4.012.1A	36	3	88713.1010	1a	7	88765.1058	1	13	88765.1126Z	1b	1
856.1.071.1A	12	9	884.4.017.1A	7	10	88713.1058	1a	9	88765.1073	1b	21	88765.1241	1c	0
860.1.004.1A	10	23	884.4.042.1A	9	24	88713.1062	1a	1	88765.1074	1b	21	88765.1242	1c	0
861.5.003.1A	26	30	884.5.008.1A	25	11	88713.1072	1a	6	88765.1075	1b	21	88765.1243	1c	0
863.1.002.1A	12	14	884.5.034.1A	2	22	88713.1078	1	12	88765.1076	1b	21	88765.1244	1c	0
866.1.037.1A	35	11	884.5.034.1A	8	18	88713.1079	1	14	88765.1077	1b	21	88765.1245	1c	0
866.1.040.1A	35	3	884.5.035.1A	5	11	88713.1091	1	21	88765.1086	1	22	88765.1297	1	23
872.1.019.1A	32	6	884.5.036.1A	12	7	88713.1096	1a	8	88765.1126	1b	6	88765.1322	1	18
872.1.026.1A	30	18	884.5.036.1A	9	25	88713.1215	1	9	88765.1126A	1b	4	88765.1369A	1b	24
872.1.028.1A	26	21	886.4.011.1A	35	21	88713.1344	1a	3	88765.1126B	1b	12	88765.1369B	1b	24
873.1.039.1A	9	14	886.4.021.1A	16	24	88713.1515	1a	5	88765.1126C	1b	11	88765.1369C	1b	24
875.1.063.1A	33	15	886.4.022.1A	16	23	88713.1749	1	24	88765.1126D	1b	14	88765.1369D	1b	24
875.1.065.1A	1c	3	886.4.028.1A	15	28	88713.1994	1	25	88765.1126E	1b	9	88765.1369E	1b	24
876.1.066.1A	34	14	886.4.033.1A	11	23	88713.2009	1	30	88765.1126F	1b	13	88765.1371	1b	25
876.1.082.1A	34	1	886.4.035.1A	11	8	88713.2011	1	17	88765.1126G	1b	17	88765.1372	1b	26
877.1.039.1A	29	16	886.4.037.1A	9	4	88713.2036	1	19	88765.1126H	1b	16	88765.1373	1b	27
877.2.002.1A	34	7	886.4.043.1A	4	17	88713.2092	1	28	88765.1126L	1b	19	88765.1374	1b	28
881.1.010.1C	12	18	886.4.090.1A	5	14	88713.2103	1	3	88765.1126M	1b	18	88765.1375AF	1	27
881.1.012.1A	2	32	88700.5644	1	31	88713.2107	1	1	88765.1126N	1b	7	88765.1375BF	1	27
881.1.026.1A	4	13	88700.5749	1	20	88713.2107	1	34	88765.1126P	1b	10	88765.1375CF	1	27
881.1.030.1A	11	26	88713.0123	1	5	88713.2133	1	26	88765.1126Q	1b	5	88765.1375DF	1	27

CATALOGUE No: 915.1.102.2E
ISSUED: 02 - 05

INDEX

CODE No.	Drwg.	POS. N.	CODE No.	Drwg.	POS. N.	CODE No.	Drwg.	POS. N.	CODE No.	Drwg.	POS. N.	CODE No.	Drwg.	POS. N.
88765.1375EF	1	27												
893.1.005.1A	5	15												
893.4.005.1A	29	22												
894.2.009.1A	9	19												
895.4.001.2A	35	15												
8A00.67997	29	39												
8A00.67997	3	14												
8A00.69056	24	3												
913.7.095.1B	37	9												
914.7.023.1A	1b	2												
914.7.023.1B	1b	2												
914.7.023.1C	1b	2												
914.7.023.1D	1b	2												
914.7.023.1E	1b	2												
930.1.004.1A	26	5												
93781.1824	33	2												
93783.1524	11	11												
93784.2030	5	9												
93785.1830	10	16												
93823.2018	4	18												
93823.3156	10	34												
93827.0114	10	28												
93827.0114	5	12												
93827.0114	9	22												
94247.0014	10	5												
94247.0014	11	15												
98112.0002	1	4												

CATALOGUE No: 915.1.102.2E
ISSUED: 02 - 05