1200 ABS
Model Year 2013

MULTISTRADA

Chassis prefix:
Cylinder capacity: 1200

D16000013
SPARE PARTS CATALOGUE
en-US

The present spare parts order exactly the right spare parts.

When ordering specify:

1. the part's code number followed by its description and quantity needed;
2. the motorcycle's serial number, stamped on the steering head.

Reference to right and left apply to the vehicle in terms of its direction of move-ment.

Spare parts drawings are general and do not represent the part.

The contents of this catalogue are general and can undergo changes without prior notice.

CHARACTERISTICS LEGENDA

CHARACTERISTIC CODE	CHARACTERISTIC DESCRIPTION	VALUE CODE	VALUE DESCRIPTION
MOD	MODEL	MS1200-A	
PLT	PLANT	DB10	DMH
PLT	PLANT	DB90	
XCO	MAIN COLOUR	MC	
XCO	MAIN COLOUR	R	
XCR	FRAME / WHEEL COLOUR	RGB	
XPO	OPTIONS	STD	MOTO STANDARD
XST	STANDARD COUNTRY	AUS	
XST	STANDARD COUNTRY	CHN	
XST	STANDARD COUNTRY	EUR	
XST	STANDARD COUNTRY	FRA	
XST	STANDARD COUNTRY	JAP	
XST	STANDARD COUNTRY	THAI	

COLOUR	COLOUR CODE	COLOUR DESCRIPTION	FINISHED PRODUCTS
	MC	MATT CHROME	(D16009513) MS 1200 ABS 13 EUR MC RGB STD DMH (D16009713) MS 1200 ABS 13 JAP MC RGB STD DMH (D16010613) MS 1200 ABS 13 FRA MC RGB STD DMH (D16011613) MS 1200 ABS 13 AUS MC RGB STD DMH
	R	RED DUCATI	(D16001813) MS 1200 ABS 13 EUR R RGB STD DMH (D16003713) MS 1200 ABS 13 JAP R RGB STD DMH (D16010513) MS 1200 ABS 13 FRA R RGB STD DMH (D16010913) MS 1200 ABS 13 EUR R RGB STD DMT (D16011013) MS 1200 ABS 13 THAI R RGB STD DMT (D16011113) MS 1200 ABS 13 CHN R RGB STD DMT (D16011513) MS 1200 ABS 13 AUS R RGB STD DMH

General information....3
Colours....4
Group ELECTRIC....8
Drawing 018 - BATTERY HOLDER [MOD:MS1200-A;XST:AUS,CHN,EUR,FRA,JAP,THAI]....8
Drawing 020 - HEADLIGHT [MOD:MS1200-A;XST:AUS,CHN,EUR,FRA,JAP,THAI]....12
Drawing 18A - ENGINE CONTROL UNIT [MOD:MS1200-A;XST:AUS,CHN,EUR,FRA,JAP,THAI]....14
Drawing 18B - WIRING HARNESS [MOD:MS1200-A;XST:AUS,CHN,EUR,FRA,JAP,THAI]....18
Drawing 18C - WIRING HARNESS (COIL) [MOD:MS1200-A;XST:AUS,CHN,EUR,FRA,JAP,THAI]....20
Drawing 27A - PORTATARGA - FANALE POSTERIORE [MOD:MS1200-A;XST:CHN,EUR,FRA,JAP,THAI]....22
Drawing 27B - LICENSE PLATE HOLDER - TAILLIGHT AUS [MOD:MS1200-A;XST:AUS]....26
Group ENGINE....30
Drawing 002 - GEAR CHANGE MECHANISM [MOD:MS1200-A;XST:AUS,CHN,EUR,FRA,JAP,THAI]....30
Drawing 003 - GEAR BOX [MOD:MS1200-A;XST:AUS,CHN,EUR,FRA,JAP,THAI]....34
Drawing 004 - CLUTCH [MOD:MS1200-A;XST:AUS,CHN,EUR,FRA,JAP,THAI]....38
Drawing 005 - CLUTCH COVER [MOD:MS1200-A;XST:AUS,CHN,EUR,FRA,JAP,THAI]....42
Drawing 006 - CRANKSHAFT [MOD:MS1200-A;XST:AUS,CHN,EUR,FRA,JAP,THAI]....46
Drawing 007 - CYLINDER - PISTON [MOD:MS1200-A;XST:AUS,CHN,EUR,FRA,JAP,THAI]....48
Drawing 008 - TIMING BELT [MOD:MS1200-A;XST:AUS,CHN,EUR,FRA,JAP,THAI]....50
Drawing 009 - OIL PUMP - FILTER [MOD:MS1200-A;XST:AUS,CHN,EUR,FRA,JAP,THAI]....54
Drawing 010 - CRANKCASE [MOD:MS1200-A;XST:AUS,CHN,EUR,FRA,JAP,THAI]....58
Drawing 011 - GENERATOR COVER [MOD:MS1200-A;XST:AUS,CHN,EUR,FRA,JAP,THAI]....64
Drawing 012 - STARTING MOTOR [MOD:MS1200-A;XST:AUS,CHN,EUR,FRA,JAP,THAI]....70
Drawing 013 - CAMSHAFT [MOD:MS1200-A;XST:AUS,CHN,EUR,FRA,JAP,THAI]....72
Drawing 014 - VERTICAL CYLINDER HEAD [MOD:MS1200-A;XST:AUS,CHN,EUR,FRA,JAP,THAI]....76
Drawing 015 - HORIZONTAL CYLINDER HEAD [MOD:MS1200-A;XST:AUS,CHN,EUR,FRA,JAP,THAI]....90
Drawing 016 - OIL COOLER [MOD:MS1200-A;XST:AUS,CHN,EUR,FRA,JAP,THAI]....104
Drawing 017 - THROTTLE BODY [MOD:MS1200-A;XST:AUS,EUR,FRA,JAP]....106
Drawing 017 - THROTTLE BODY [MOD:MS1200-A;XST:CHN,THAI]....110
Drawing 10A - CRANKCASE BEARINGS [MOD:MS1200-A;XST:AUS,CHN,EUR,FRA,JAP,THAI]....112

Group TOOLS 116
Drawing 001 - WORKSHOP SERVICE TOOLS [MOD:MS1200-A;XST:AUS,CHN,EUR,FRA,JAP,THAI] 116
Drawing 01A - WORKSHOP SERVICE TOOLS [MOD:MS1200-A;XST:AUS,CHN,EUR,FRA,JAP,THAI] 120
Drawing 01B - WORKSHOP SERVICE TOOLS [MOD:MS1200-A;XST:AUS,CHN,EUR,FRA,JAP,THAI] 124
Drawing 01C - DDS (2) TESTER [MOD:MS1200-A;XST:AUS,CHN,EUR,FRA,JAP,THAI] 126
Group FRAME 128
Drawing 019 - EXHAUST SYSTEM [MOD:MS1200-A;XST:AUS,CHN,EUR,FRA,JAP,THAI] 128
Drawing 021 - HANDLEBAR [MOD:MS1200-A;XST:AUS,CHN,EUR,FRA,JAP,THAI] 132
Drawing 022 - FRAME [MOD:MS1200-A;XST:AUS,CHN,EUR,FRA,JAP,THAI] 136
Drawing 023 - CLUTCH MASTER CYLINDER [MOD:MS1200-A;XST:AUS,CHN,EUR,FRA,JAP,THAI] 140
Drawing 024 - FRONT BRAKE SYSTEM [MOD:MS1200-A;XST:AUS,CHN,EUR,FRA,JAP,THAI] 144
Drawing 025 - REAR BRAKING SYSTEM [MOD:MS1200-A;XST:AUS,CHN,EUR,FRA,JAP,THAI] 150
Drawing 026 - WHEELS [MOD:MS1200-A;XST:AUS,CHN,EUR,FRA,JAP,THAI] 154
Drawing 027 - REAR FRAME COMP. [MOD:MS1200-A;XST:AUS,CHN,EUR,FRA,JAP,THAI] 158
Drawing 028 - REAR SHOCK ABSORBER [MOD:MS1200-A;XST:AUS,CHN,EUR,FRA,JAP,THAI] 162
Drawing 029 - INTAKE [MOD:MS1200-A;XST:AUS,CHN,EUR,FRA,JAP,THAI] 164
Drawing 030 - WATER COOLER [MOD:MS1200-A;XST:AUS,EUR,FRA,JAP] 168
Drawing 030 - WATER COOLER [MOD:MS1200-A;XST:CHN,THAI] 170
Drawing 031 - COOLING CIRCUIT [MOD:MS1200-A;XST:AUS,CHN,EUR,FRA,JAP,THAI] 172
Drawing 032 - FUEL TANK [MOD:MS1200-A;XST:AUS,EUR,FRA,JAP,THAI] 176
Drawing 032 - FUEL TANK [MOD:MS1200-A;XST:CHN] 178
Drawing 033 - SEAT [MOD:MS1200-A;XST:AUS,CHN,EUR,FRA,JAP,THAI] 180
Drawing 034 - COWLING [MOD:MS1200-A;XST:AUS,CHN,EUR,FRA,JAP,THAI] 184
Drawing 036 - CANISTER FILTER [MOD:MS1200-A;XST:CHN,THAI] 188
Drawing 21A - FRONT FORK [MOD:MS1200-A;XST:AUS,EUR,FRA,JAP,THAI] 190
Drawing 21A - FRONT FORK [MOD:MS1200-A;XST:CHN] 192
Drawing 22A - SIDE STAND [MOD:MS1200-A;XST:AUS,CHN,EUR,FRA,JAP,THAI] 194
Drawing 24A - BRAKING SYSTEM ABS [MOD:MS1200-A;XST:AUS,CHN,EUR,FRA,JAP,THAI] 196
Drawing 26A - HUB, REAR WHEEL [MOD:MS1200-A;XST:AUS,CHN,EUR,FRA,JAP,THAI] 200
Drawing 28A - SWING ARM [MOD:MS1200-A;XST:AUS,CHN,EUR,FRA,JAP,THAI] 204

Drawing 32A - FUEL PUMP [MOD:MS1200-A;XST:AUS,EUR,FRA,JAP,THAI]..... 208
Drawing 32A - FUEL PUMP [MOD:MS1200-A;XST:CHN]..... 210
Drawing 34A - FAIRING [MOD:MS1200-A;XST:AUS,CHN,EUR,FRA,JAP,THAI]..... 212
Drawing 34B - FAIRING [MOD:MS1200-A;XST:AUS,CHN,EUR,FRA,JAP,THAI]..... 216
Alphanumeric index..... 220

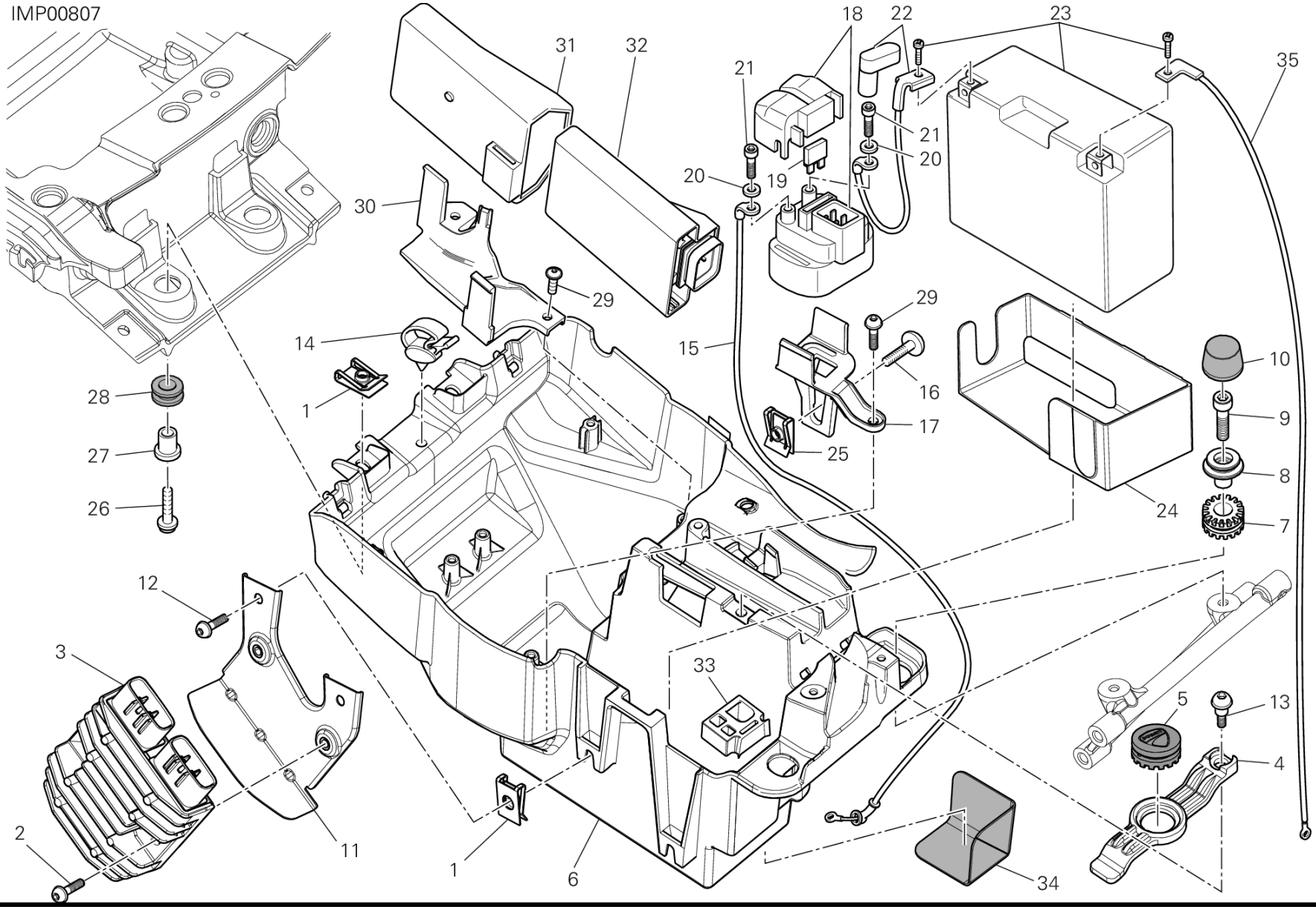
IMP00807
18
22
23
31
32
21
35
21
20
20
19
30
29
29
14
15
16
10
1
17
9
28
25
8
27
24
7
26
12
3
33
5
13
4
2
11
1
6
34

POS.	CODE	DESCRIPTION	QTY	START DATE	END DATE	VALIDITY	NOTES
1	85040381A	QUICK FASTENING	4	09/03/2012		MOD:MS1200-A;XST:AUS,CHN,EUR,FRA,JAP,THAI	
2	77240443C	SCREW	2	09/03/2012		MOD:MS1200-A;XST:AUS,CHN,EUR,FRA,JAP,THAI	
3	54040301B	VOLTAGE REGULATOR	1	09/03/2012		MOD:MS1200-A;XST:AUS,CHN,EUR,FRA,JAP,THAI	
4	83015601A	BRACKET, BATTERY BAND	1	09/03/2012		MOD:MS1200-A;XST:AUS,CHN,EUR,FRA,JAP,THAI	
5	76410621B	RUBBER PAD	1	09/03/2012		MOD:MS1200-A;XST:AUS,CHN,EUR,FRA,JAP,THAI	
6	8291A802A	BATTERY HOLDER	1	09/03/2012		MOD:MS1200-A;XST:AUS,CHN,EUR,FRA,JAP,THAI	
7	76410241A	VIBRATION DAMPER PAD	2	09/03/2012		MOD:MS1200-A;XST:AUS,CHN,EUR,FRA,JAP,THAI	
8	71314681A	SPACER	2	09/03/2012		MOD:MS1200-A;XST:AUS,CHN,EUR,FRA,JAP,THAI	
9	77354888B	SCREW	2	09/03/2012		MOD:MS1200-A;XST:AUS,CHN,EUR,FRA,JAP,THAI	
10	86611031A	RUBBER PAD	2	09/03/2012		MOD:MS1200-A;XST:AUS,CHN,EUR,FRA,JAP,THAI	
11	82919901A	HOLDER VOLTAGE RECTIFIER	1	09/03/2012		MOD:MS1200-A;XST:AUS,CHN,EUR,FRA,JAP,THAI	
12	77240398C	SCREW TBEIF M6X10	2	09/03/2012		MOD:MS1200-A;XST:AUS,CHN,EUR,FRA,JAP,THAI	
13	77210852A	SCREW TCEI M5X9	1	09/03/2012		MOD:MS1200-A;XST:AUS,CHN,EUR,FRA,JAP,THAI	
14	75840171A	CLAMP	1	09/03/2012		MOD:MS1200-A;XST:AUS,CHN,EUR,FRA,JAP,THAI	
15	51410612A	SOLENOID STARTER - STARTER MOTOR CABLE	1	09/03/2012		MOD:MS1200-A;XST:AUS,CHN,EUR,FRA,JAP,THAI	
16	77914871A	SCREW TBEI M5X12	1	09/03/2012		MOD:MS1200-A;XST:AUS,CHN,EUR,FRA,JAP,THAI	
17	83015621A	BRACKET REMOTE SWITCH	1	09/03/2012		MOD:MS1200-A;XST:AUS,CHN,EUR,FRA,JAP,THAI	

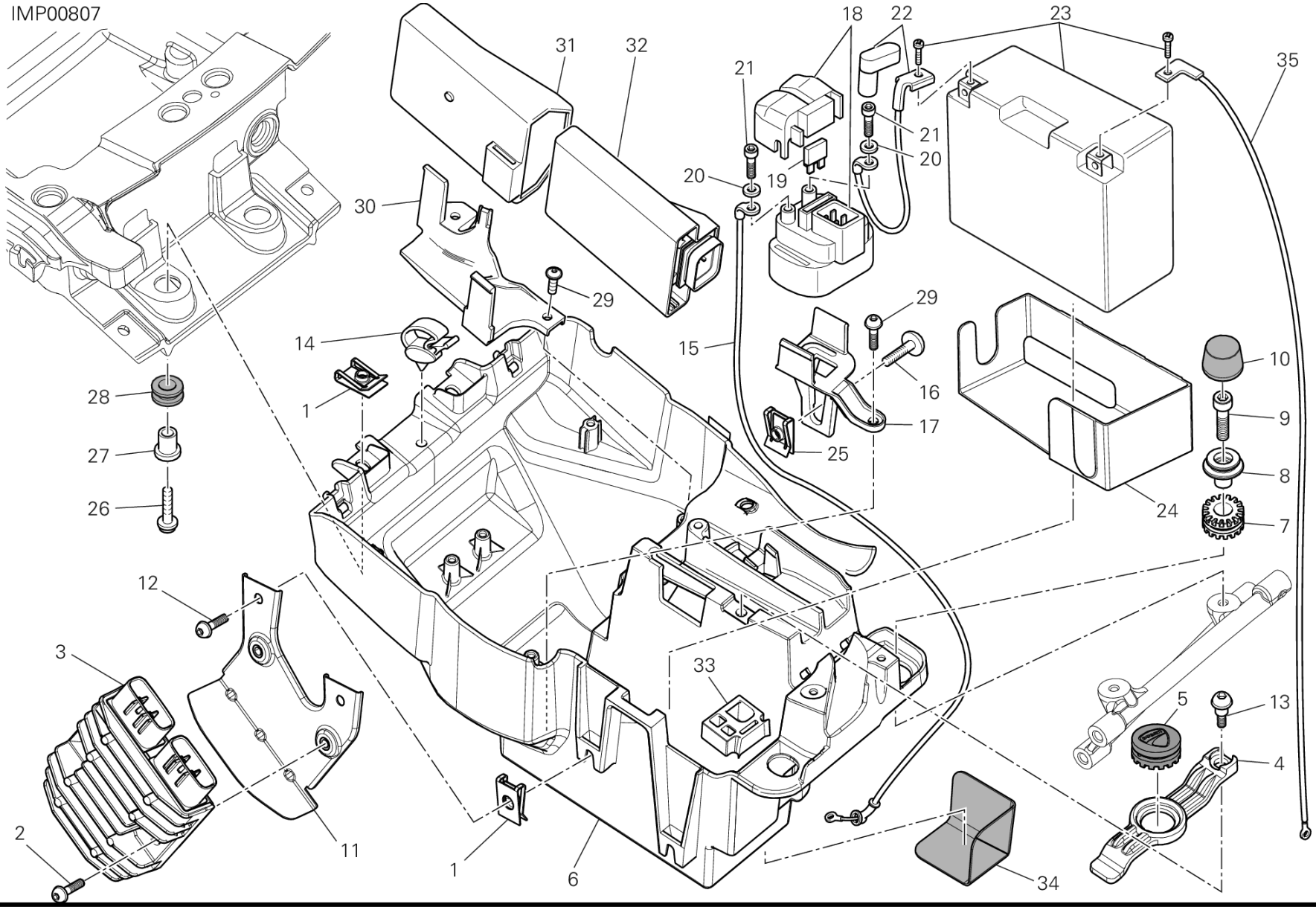
IMP00807
31
32
18
22
23
35
21
21
20
20
19
30
29
29
14
15
16
10
28
1
17
9
27
25
8
26
24
7
12
3
33
5
13
4
2
11
1
6
34

POS.	CODE	DESCRIPTION	QTY	START DATE	END DATE	VALIDITY	NOTES
18	39740071A	STARTER RELAY	1	09/03/2012		MOD:MS1200-A;XST:AUS,CHN,EUR,FRA,JAP,THAI	
19	38940251A	FUSE 30A	2			MOD:MS1200-A;XST:AUS,CHN,EUR,FRA,JAP,THAI	
20	85350101A	WASHER, SPRING	2	09/03/2012		MOD:MS1200-A;XST:AUS,CHN,EUR,FRA,JAP,THAI	
21	77156628B	SCREW TCEIF M6X10	2	09/03/2012		MOD:MS1200-A;XST:AUS,CHN,EUR,FRA,JAP,THAI	
22	51410601A	BATTERY - SOLENOID STARTER CABLE	1	09/03/2012		MOD:MS1200-A;XST:AUS,CHN,EUR,FRA,JAP,THAI	
23	39520132C	BATTERY	1	09/03/2012		MOD:MS1200-A;XST:AUS,CHN,EUR,FRA,JAP,THAI	
24	86610981A	BATTERY CARPET	1	09/03/2012		MOD:MS1200-A;XST:AUS,CHN,EUR,FRA,JAP,THAI	
25	85040471A	QUICK FASTENING M5	1	09/03/2012		MOD:MS1200-A;XST:AUS,CHN,EUR,FRA,JAP,THAI	
26	77210971B	SCREW	2	09/03/2012		MOD:MS1200-A;XST:AUS,CHN,EUR,FRA,JAP,THAI	
27	71610061A	SPACER	2	09/03/2012		MOD:MS1200-A;XST:AUS,CHN,EUR,FRA,JAP,THAI	
28	76410641A	VIBRATION DAMPER PAD	2	08/06/2012		MOD:MS1200-A;XST:AUS,CHN,EUR,FRA,JAP,THAI	
29	77440041A	SCREW, TAPPING M5X16	3	09/03/2012		MOD:MS1200-A;XST:AUS,CHN,EUR,FRA,JAP,THAI	
30	83017251A	BRACKET BLACKBOX	1	09/03/2012		MOD:MS1200-A;XST:AUS,CHN,EUR,FRA,JAP,THAI	
31	70010731A	BRACKET	1	09/03/2012		MOD:MS1200-A;XST:AUS,CHN,EUR,FRA,JAP,THAI	
32	38512051B	BLACKBOX UNIT	1	09/03/2012		MOD:MS1200-A;XST:AUS,CHN,EUR,FRA,JAP,THAI	
33	8291A831A	BRACKET, CONNECTOR	1	09/03/2012		MOD:MS1200-A;XST:AUS,CHN,EUR,FRA,JAP,THAI	
34	46014421A	BATTERY MOUNT HEAT GUARD	1	09/03/2012		MOD:MS1200-A	
35	51310232A	BATTERY - ENGINE GROUNDING CABLE	1	09/03/2012		MOD:MS1200-A;XST:AUS,CHN,EUR,FRA,JAP,THAI	

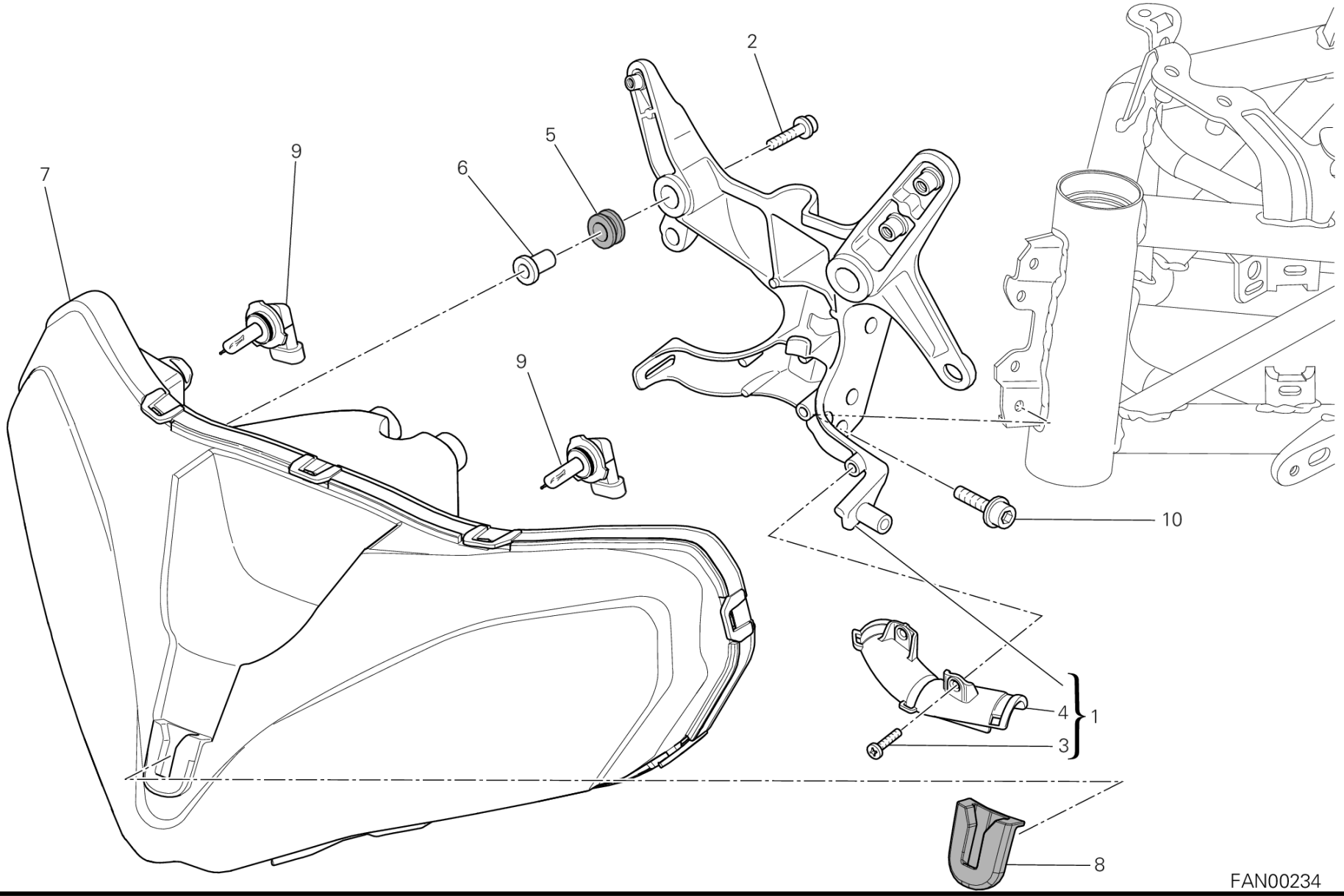
2
5
9
6
7
9
10
4
1
3
8
FAN00234

POS.	CODE	DESCRIPTION	QTY	START DATE	END DATE	VALIDITY	NOTES
1	82929891A	HEAD-LIGHT SUPPORT	1	24/12/2009		MOD:MS1200-A;XST:AUS,CHN,EUR,FRA,JAP,THAI	
2	77211141A	SCREW	4	09/03/2012		MOD:MS1200-A;XST:AUS,CHN,EUR,FRA,JAP,THAI	
3	77110531A	SCREW TBEI M5X10	2	24/12/2009		MOD:MS1200-A;XST:AUS,CHN,EUR,FRA,JAP,THAI	
4	75810581A	PROTECTION WIRING	1	24/12/2009		MOD:MS1200-A;XST:AUS,CHN,EUR,FRA,JAP,THAI	
5	76411141A	VIBRATION DAMPER PAD	4	24/12/2009		MOD:MS1200-A;XST:AUS,CHN,EUR,FRA,JAP,THAI	
6	71614102AA	SPACER	4	15/05/2012		MOD:MS1200-A;XST:AUS,CHN,EUR,FRA,JAP,THAI	
7	52010232B	HEADLIGHT	1	01/10/2012		MOD:MS1200-A;XST:AUS,CHN,EUR,FRA,JAP,THAI	
8	76411331A	RUBBER PAD	1	09/03/2012		MOD:MS1200-A;XST:AUS,CHN,EUR,FRA,JAP,THAI	
9	39040201A	BULB 12V, 55W	2			MOD:MS1200-A;XST:AUS,CHN,EUR,FRA,JAP,THAI	
10	77110411A	SCREW TCEIF M8X20	2	09/03/2012		MOD:MS1200-A;XST:AUS,CHN,EUR,FRA,JAP,THAI	

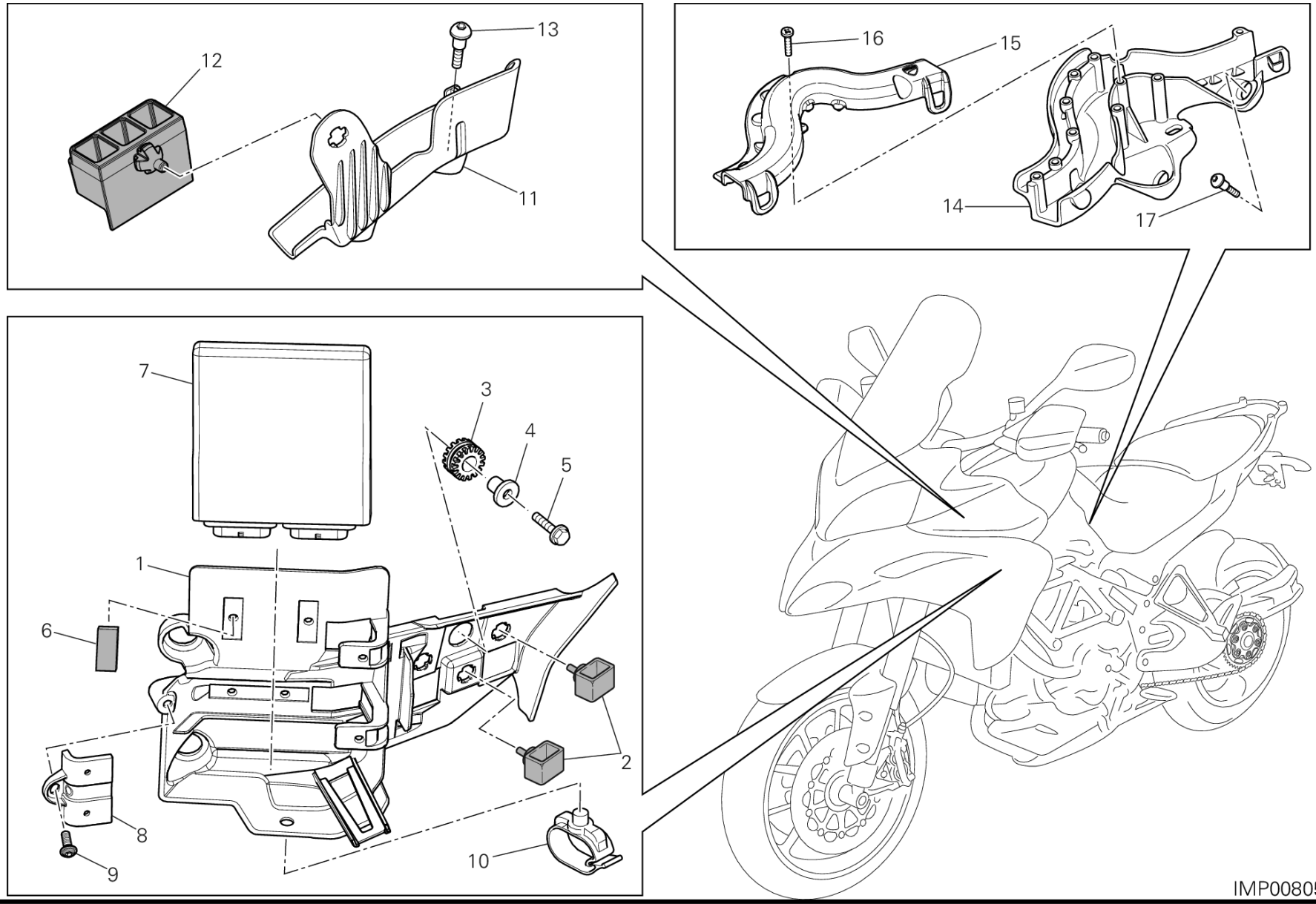
12
13
11
16
15
14
17
7
3
4
5
1
6
2
8
9
10
IMP00805

DRAWING 18A - ENGINE CONTROL UNIT [MOD:MS1200-A;XST:AUS,CHN,EUR,FRA,JAP,THAI]

GROUP ELECTRIC

POS.	CODE	DESCRIPTION	QTY	START DATE	END DATE	VALIDITY	NOTES
1	54410132A	BRACKET ENGINE CONTROL UNIT	1	10/05/2010		MOD:MS1200-A;XST:AUS,CHN,EUR,FRA,JAP,THAI	
2	82911901A	MOUNT RUBBER	3	10/05/2010		MOD:MS1200-A;XST:AUS,CHN,EUR,FRA,JAP,THAI	
3	76410241A	VIBRATION DAMPER PAD	3	10/05/2010		MOD:MS1200-A;XST:AUS,CHN,EUR,FRA,JAP,THAI	
4	71614091A	SPACER	3	09/03/2012		MOD:MS1200-A;XST:AUS,CHN,EUR,FRA,JAP,THAI	
5	77251038B	SCREW TEF M6X25	3	09/03/2012		MOD:MS1200-A;XST:AUS,CHN,EUR,FRA,JAP,THAI	
6	86611241A	RUBBER PAD	8	10/05/2010		MOD:MS1200-A;XST:AUS,CHN,EUR,FRA,JAP,THAI	
7	28642321A	ENGINE CONTROL UNIT	1	09/03/2012		MOD:MS1200-A;XST:AUS,EUR,THAI	EUR-AUS-THAI
	28642321E	ENGINE CONTROL UNIT	1	09/03/2012		MOD:MS1200-A;XST:FRA	FRA
	28642321F	ENGINE CONTROL UNIT	1	09/03/2012		MOD:MS1200-A;XST:JAP	JAP
	28642321L	ENGINE CONTROL UNIT	1	09/03/2012		MOD:MS1200-A;XST:CHN	CHN
8	83015401A	BRACKET	1	24/12/2009		MOD:MS1200-A;XST:AUS,CHN,EUR,FRA,JAP,THAI	
9	77440041A	SCREW, TAPPING M5X16	1	09/03/2012		MOD:MS1200-A;XST:AUS,CHN,EUR,FRA,JAP,THAI	
10	75840591A	HOSE GUIDE	1	10/05/2010		MOD:MS1200-A;XST:AUS,CHN,EUR,FRA,JAP,THAI	
11	82919971A	HOLDER FRONT L.H.	1	24/12/2009		MOD:MS1200-A;XST:AUS,CHN,EUR,FRA,JAP,THAI	
12	82919963A	HOLDER RELAY	1	24/12/2009		MOD:MS1200-A;XST:AUS,CHN,EUR,FRA,JAP,THAI	
13	77210853B	SCREW TCEI M5X9	2	09/03/2012		MOD:MS1200-A;XST:AUS,CHN,EUR,FRA,JAP,THAI	
14	82919991A	HOLDER WIRING	1	09/03/2012		MOD:MS1200-A;XST:AUS,CHN,EUR,FRA,JAP,THAI	
15	24713592A	COVER	1	09/03/2012		MOD:MS1200-A;XST:AUS,CHN,EUR,FRA,JAP,THAI	
16	77450181A	SCREW	3	09/03/2012		MOD:MS1200-A;XST:AUS,CHN,EUR,FRA,JAP,THAI	

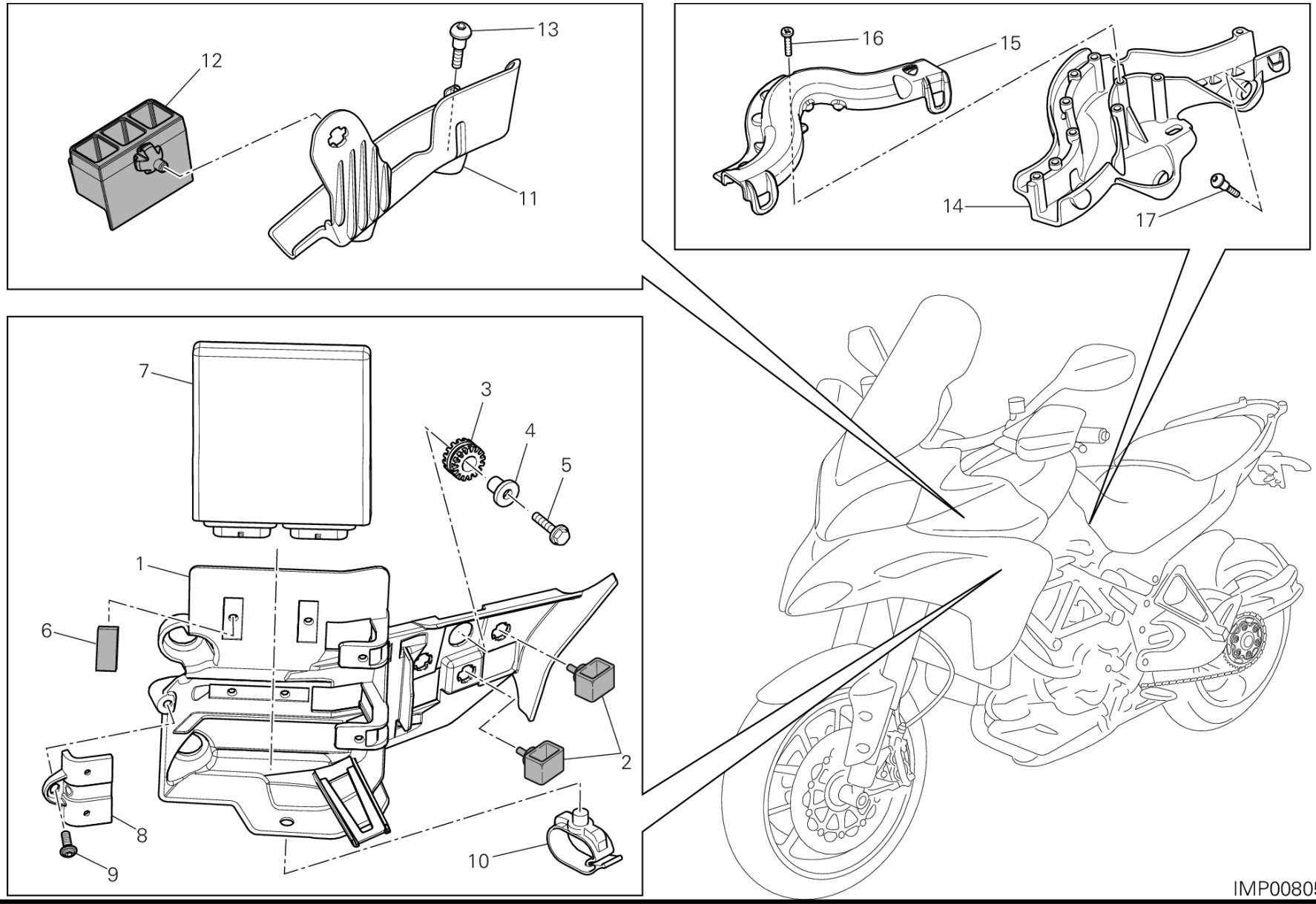
12
13
11
16
15
14
17
7
3
4
5
1
6
2
8
9
10
IMP00805

POS.	CODE	DESCRIPTION	QTY	START DATE	END DATE	VALIDITY	NOTES
17	77210852A	SCREW TCEI M5X9	2	09/03/2012		MOD:MS1200-A;XST:AUS,CHN,EUR,FRA,JAP,THAI	

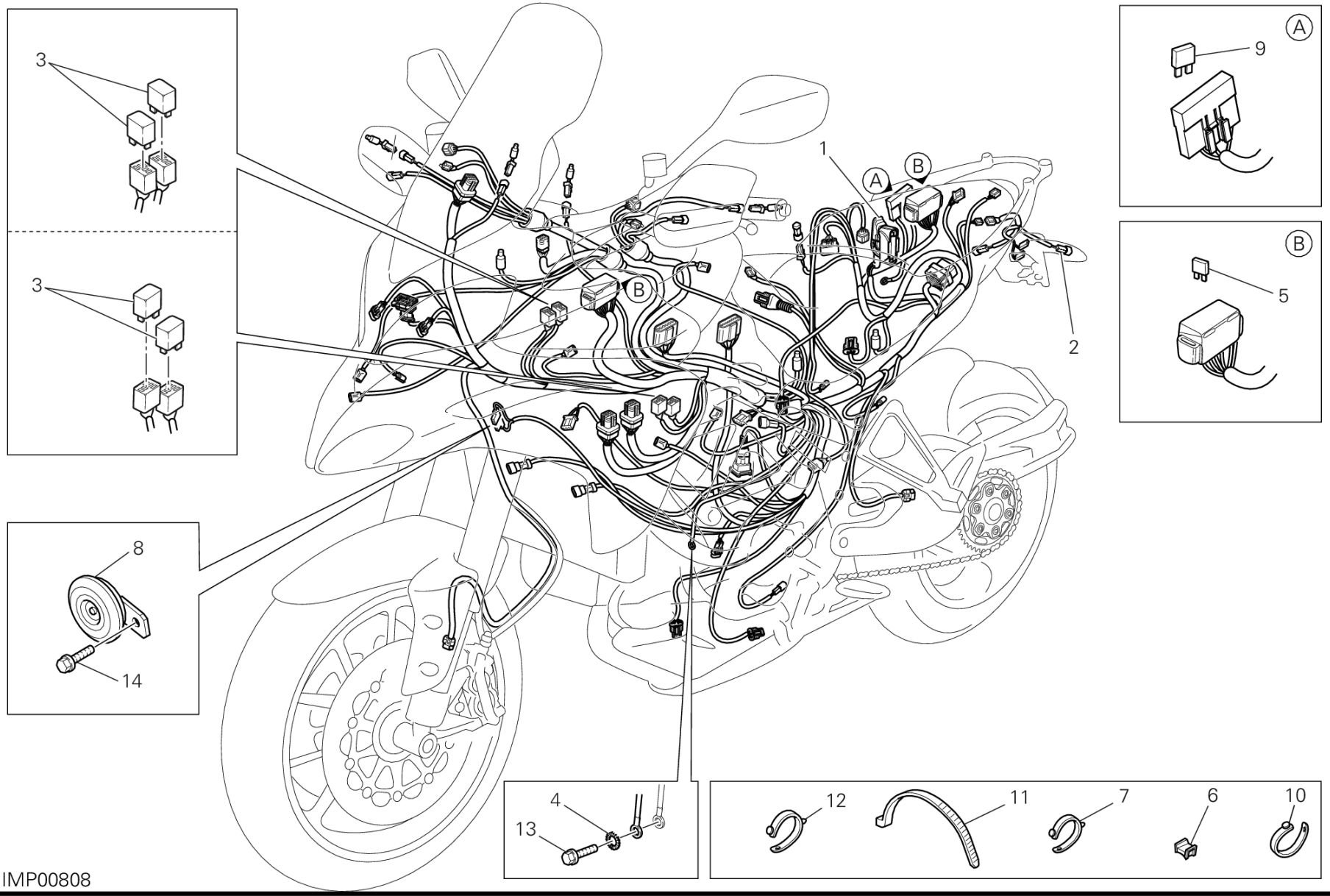

IMP00808

POS.	CODE	DESCRIPTION	QTY	START DATE	END DATE	VALIDITY	NOTES
1	51018671A	ELECTRIC WIRING	1	09/03/2012		MOD:MS1200-A	
2	51017001A	ELECTRIC WIRING REAR	1	09/03/2012		MOD:MS1200-A	
3	54140101A	RELAY	4			MOD:MS1200-A	
4	85550001B	ALUMINIUM GASKET	1	09/03/2012		MOD:MS1200-A	
5	38940191A	FUSE 5A	1			MOD:MS1200-A	
	38940201A	FUSE 10A	6			MOD:MS1200-A	
	38940221A	FUSE 20A	2			MOD:MS1200-A	
	38940241A	FUSE 7,5A	1			MOD:MS1200-A	
6	85040671A	CLAMP TUCKER	15	09/03/2012		MOD:MS1200-A	
7	74110121A	CLAMP, RUBBER 62MM	3	09/03/2012		MOD:MS1200-A	
8	51640011AB	HORN	1	09/03/2012		MOD:MS1200-A	
9	38940271A	FUSE 25A	1			MOD:MS1200-A	
	38940281A	FUSE 40A	1			MOD:MS1200-A	
10	74110131A	CLAMP, RUBBER 82MM	1	09/03/2012		MOD:MS1200-A	
11	069191030	CLAMP	6	09/03/2012		MOD:MS1200-A	
12	74110101A	CLAMP 70MM	1	09/03/2012		MOD:MS1200-A	
13	77211061A	SCREW TEF M6X14	1	09/03/2012		MOD:MS1200-A	
14	77211341A	SCREW	1	09/03/2012		MOD:MS1200-A	

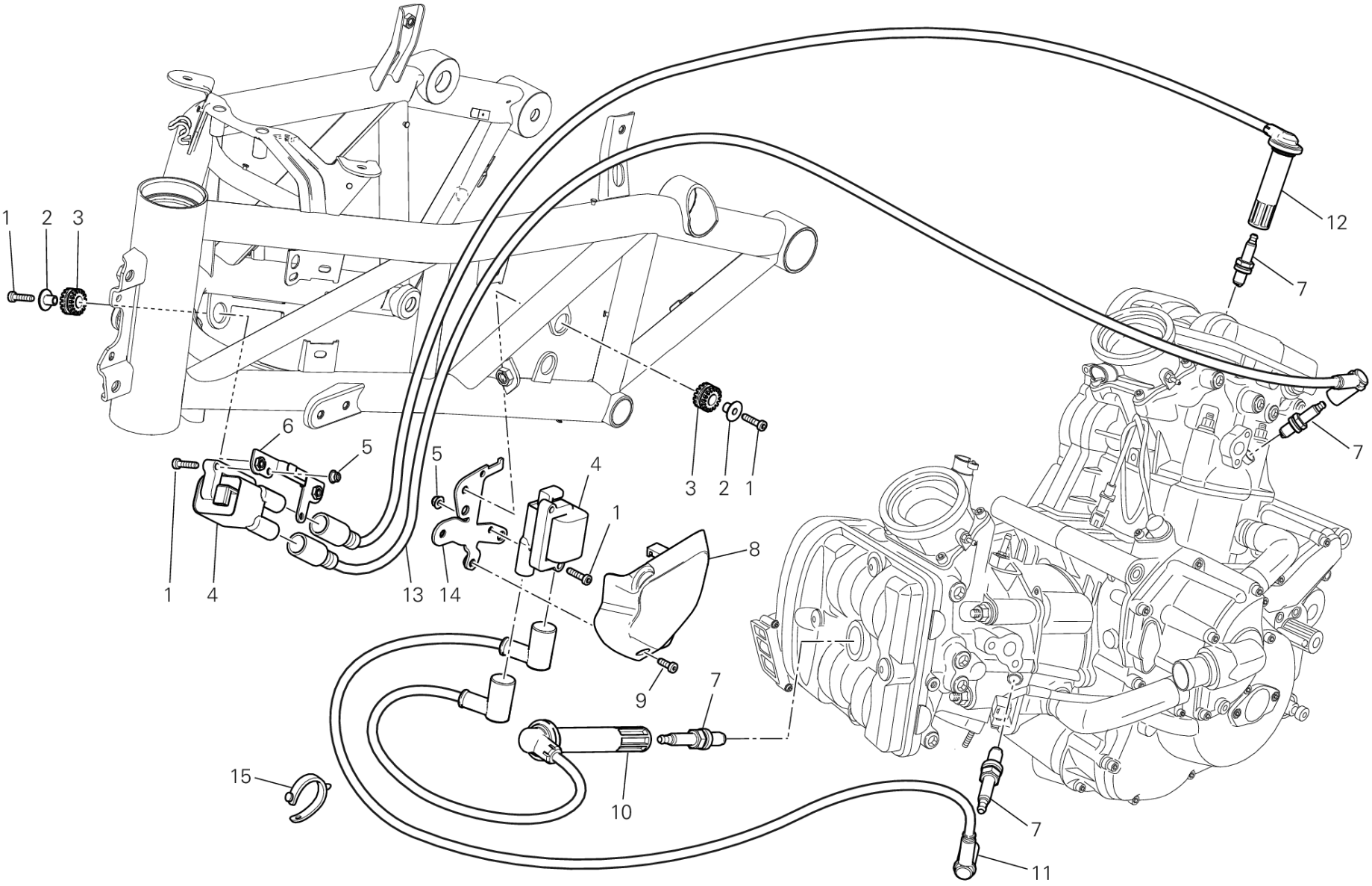

IMP00811

DRAWING 18C - WIRING HARNESS (COIL) [MOD:MS1200-A;XST:AUS,CHN,EUR,FRA,JAP,THAI]

GROUP ELECTRIC

POS.	CODE	DESCRIPTION	QTY	START DATE	END DATE	VALIDITY	NOTES
1	77354743B	SCREW TCEIR M5X20 DIN6912 8.8	8	01/06/2012		MOD:MS1200-A;XST:AUS,CHN,EUR,FRA,JAP,THAI	
2	71614511AA	SPACER	4	09/03/2012		MOD:MS1200-A;XST:AUS,CHN,EUR,FRA,JAP,THAI	
3	76410241A	VIBRATION DAMPER PAD	4	08/06/2012		MOD:MS1200-A;XST:AUS,CHN,EUR,FRA,JAP,THAI	
4	38040101C	IGNITION COIL	2	01/06/2012		MOD:MS1200-A;XST:AUS,CHN,EUR,FRA,JAP,THAI	
5	74810351B	NUT	4	01/06/2012		MOD:MS1200-A;XST:AUS,CHN,EUR,FRA,JAP,THAI	
6	83017281BA	BRACKET	1	01/06/2012		MOD:MS1200-A;XST:AUS,CHN,EUR,FRA,JAP,THAI	
7	67040381A	SPARK PLUG NGK MAR10A-J	4	25/06/2012		MOD:MS1200-A;XST:AUS,CHN,EUR,FRA,JAP,THAI	
8	24714381A	COVER	1	09/03/2012		MOD:MS1200-A;XST:AUS,CHN,EUR,FRA,JAP,THAI	
9	77350403B	SCREW	1	09/03/2012		MOD:MS1200-A;XST:AUS,CHN,EUR,FRA,JAP,THAI	
10	67110571A	VERICAL HEAD SPARK PLUGWIRING LEFT	1	01/06/2012		MOD:MS1200-A;XST:AUS,CHN,EUR,FRA,JAP,THAI	
11	67110561A	VERICAL HEAD SPARK PLUGWIRING	1	01/06/2012		MOD:MS1200-A;XST:AUS,CHN,EUR,FRA,JAP,THAI	
12	67110551A	HORIZONTAL HEAD SPARK PLUGWIRING LEFT	1	01/06/2012		MOD:MS1200-A;XST:AUS,CHN,EUR,FRA,JAP,THAI	
13	67110521A	HORIZONTAL HEAD SPARK PLUGWIRING	1	01/06/2012		MOD:MS1200-A;XST:AUS,CHN,EUR,FRA,JAP,THAI	
14	83017291BA	BRACKET	1	01/06/2012		MOD:MS1200-A;XST:AUS,CHN,EUR,FRA,JAP,THAI	
15	74110551A	CLAMP	3	01/06/2012		MOD:MS1200-A;XST:AUS,CHN,EUR,FRA,JAP,THAI	

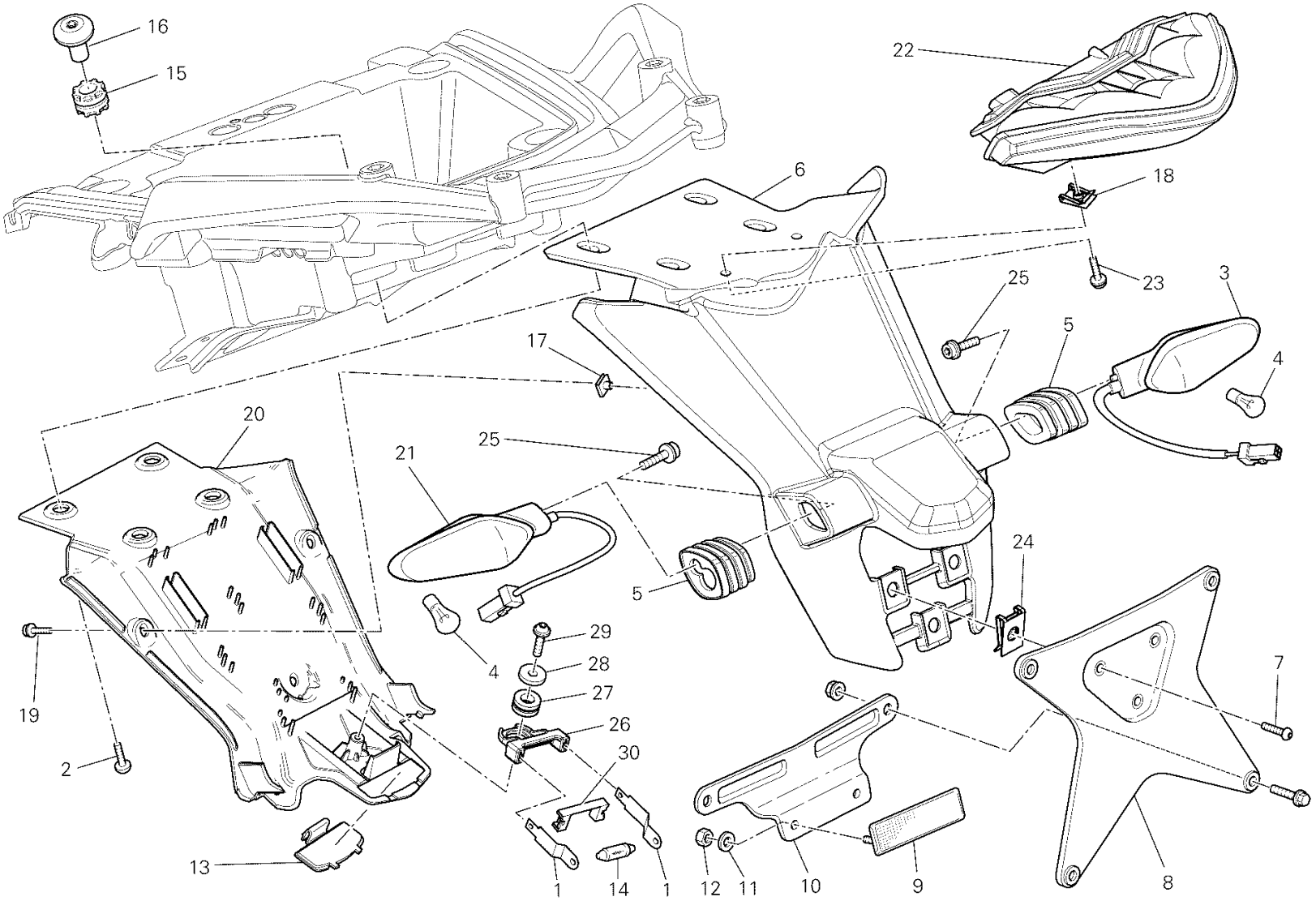
16
15
22
18
6
25
23
3
5
4
17
20
21
25
5
24
29
28
27
26
30
4
19
2
13
1
14
1
12
11
10
9
8
7

TEL00680

DRAWING 27A - PORTATARGA - FANALE POSTERIORE [MOD:MS1200-A;XST:CHN,EUR,FRA,JAP,THAI]

GROUP ELECTRIC

POS.	CODE	DESCRIPTION	QTY	START DATE	END DATE	VALIDITY	NOTES
1	39110033A	BLADE	2	09/03/2012		MOD:MS1200-A;XST:CHN,EUR,FRA,JAP,THAI	
2	77211231A	SCREW	4	09/03/2012		MOD:MS1200-A;XST:CHN,EUR,FRA,JAP,THAI	
3	53010225A	FLASHER LIGHT FRONT LH - REAR RH	1	09/03/2012		MOD:MS1200-A;XST:CHN,EUR,FRA,JAP,THAI	
4	39040211A	BULB	2	12/03/2012		MOD:MS1200-A;XST:CHN,EUR,FRA,JAP,THAI	
5	7131A031A	SPACER	2	01/09/2012		MOD:MS1200-A;XST:CHN,EUR,FRA,JAP,THAI	
6	56110461D	PLATE HOLDER	1	01/09/2012		MOD:MS1200-A;XST:CHN,EUR,FRA,JAP,THAI	
7	77550131A	SCREW	3	09/03/2012		MOD:MS1200-A;XST:CHN,EUR,FRA,JAP,THAI	
8	56110261A	NUMBER PLATE HOLDER	1	09/03/2012		MOD:MS1200-A;XST:CHN,EUR,FRA,JAP,THAI	
9	52910061B	REFLEX REFLECTOR, REAR	1	09/03/2012		MOD:MS1200-A;XST:CHN,EUR,FRA,JAP,THAI	
10	82712981B	BRACKET, REFLECTOR	1	09/03/2012		MOD:MS1200-A;XST:CHN,EUR,FRA,JAP,THAI	
11	85250011C	WASHER 4.3X9X0.8	2	09/03/2012		MOD:MS1200-A;XST:CHN,EUR,FRA,JAP,THAI	
12	74950011B	NUT, SPRING	2	09/03/2012		MOD:MS1200-A;XST:CHN,EUR,FRA,JAP,THAI	
13	24713331A	LENS, LICENCE LIGHT	1	09/03/2012		MOD:MS1200-A;XST:CHN,EUR,FRA,JAP,THAI	
14	39040162A	BULB 12V-5W C5W	1	09/03/2012		MOD:MS1200-A;XST:CHN,EUR,FRA,JAP,THAI	
15	76410241A	VIBRATION DAMPER PAD	4	08/06/2012		MOD:MS1200-A;XST:CHN,EUR,FRA,JAP,THAI	
16	77916631A	SCREW, SPECIAL	4	09/03/2012		MOD:MS1200-A;XST:CHN,EUR,FRA,JAP,THAI	
17	85040471A	QUICK FASTENING M5	3	09/03/2012		MOD:MS1200-A;XST:CHN,EUR,FRA,JAP,THAI	

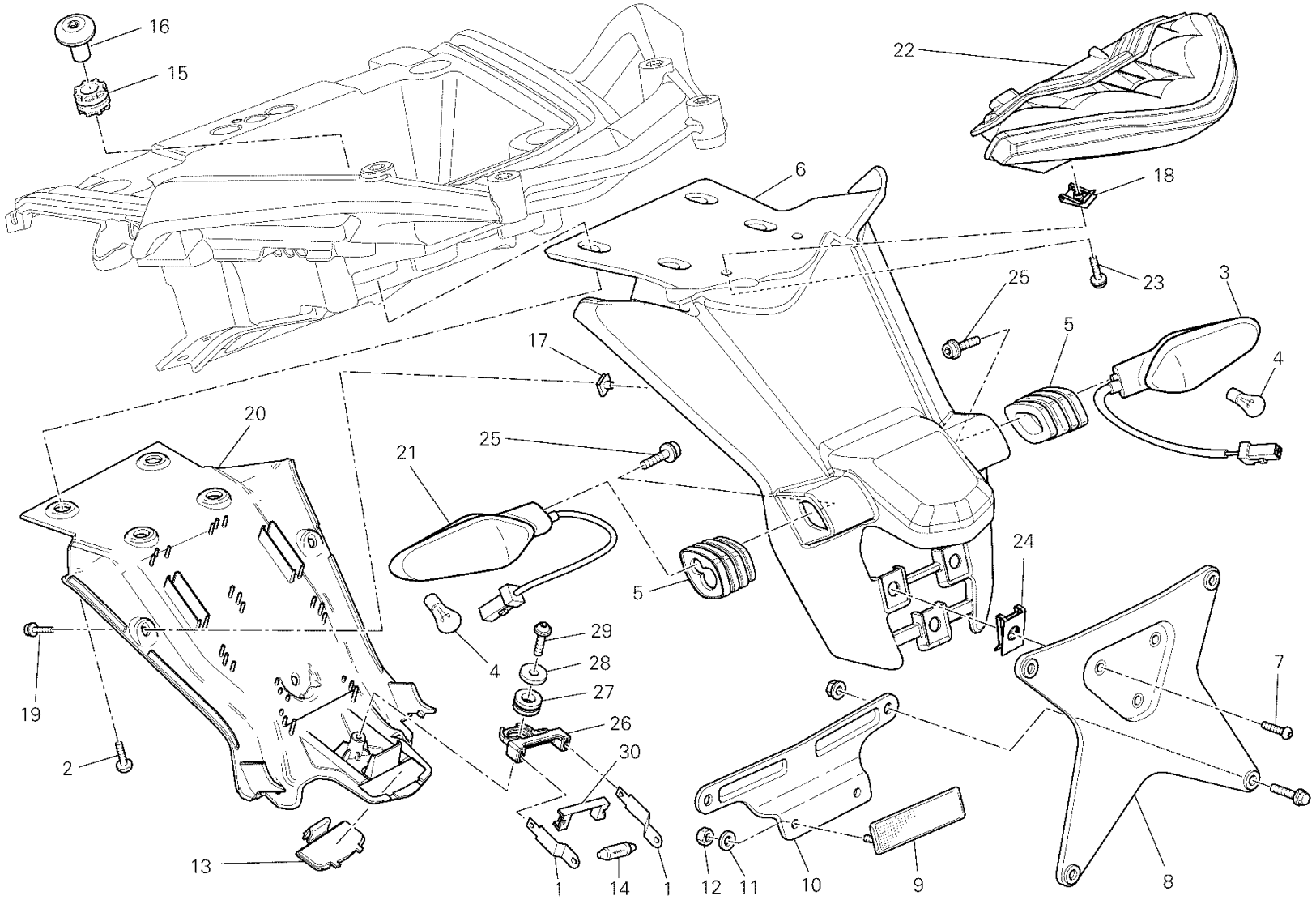
16
15
22
18
6
25
23
3
5
4
17
20
21
25
5
24
29
28
27
26
30
4
19
2
13
1
14
1
12
11
10
9
8
7

TEL00680

DRAWING 27A - PORTATARGA - FANALE POSTERIORE [MOD:MS1200-A;XST:CHN,EUR,FRA,JAP,THAI]

GROUP ELECTRIC

POS.	CODE	DESCRIPTION	QTY	START DATE	END DATE	VALIDITY	NOTES
18	85040551A	QUICK FASTENING	2	09/03/2012		MOD:MS1200-A;XST:CHN,EUR,FRA,JAP,THAI	
19	77240263C	SCREW	3	09/03/2012		MOD:MS1200-A;XST:CHN,EUR,FRA,JAP,THAI	
20	24713461D	MUDFLAP	1	01/09/2012		MOD:MS1200-A;XST:CHN,EUR,FRA,JAP,THAI	
21	53010235A	FLASHER LIGHT FRONT RH- REAR LH	1	09/03/2012		MOD:MS1200-A;XST:CHN,EUR,FRA,JAP,THAI	
22	52510382A	TAILLIGHT	1	09/03/2012		MOD:MS1200-A;XST:CHN,EUR,FRA,JAP,THAI	
23	77240278C	SCREW	2	09/03/2012		MOD:MS1200-A;XST:CHN,EUR,FRA,JAP,THAI	
24	85040381A	QUICK FASTENING	3	24/12/2009		MOD:MS1200-A;XST:CHN,EUR,FRA,JAP,THAI	
25	77156398B	SCREW TCEIF M5X12	2	09/03/2012		MOD:MS1200-A;XST:CHN,EUR,FRA,JAP,THAI	
26	83015483A	BRACKET	1	09/03/2012		MOD:MS1200-A;XST:CHN,EUR,FRA,JAP,THAI	
27	76410901A	RUBBER PAD	1	09/03/2012		MOD:MS1200-A;XST:CHN,EUR,FRA,JAP,THAI	
28	85241731A	WASHER 5.5X20X1.5	1	09/03/2012		MOD:MS1200-A;XST:CHN,EUR,FRA,JAP,THAI	
29	77440061A	SCREW, TAPPING 4.5X16	1	09/03/2012		MOD:MS1200-A;XST:CHN,EUR,FRA,JAP,THAI	
30	71319241A	SPACER	1	09/03/2012		MOD:MS1200-A;XST:CHN,EUR,FRA,JAP,THAI	

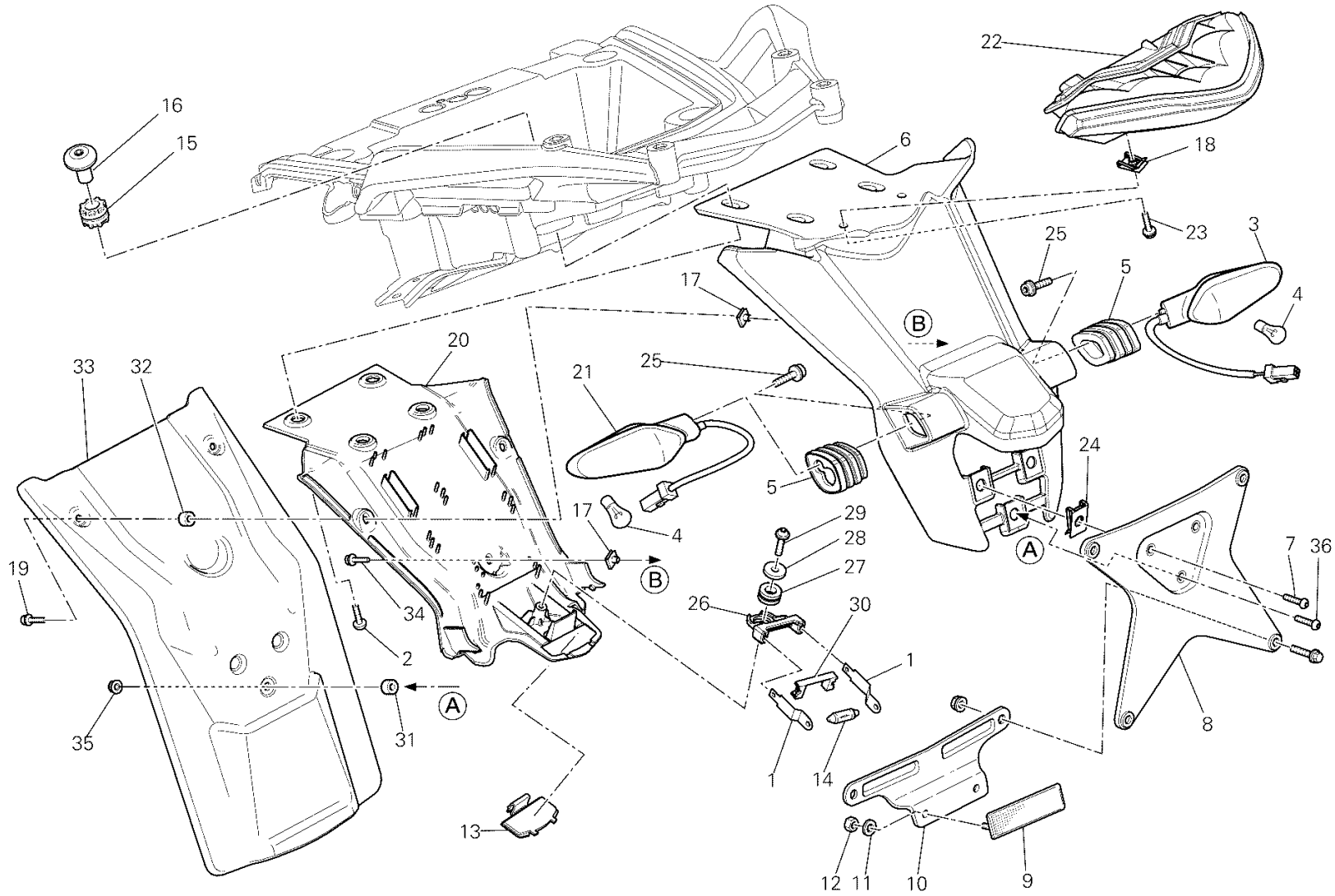
16
15
22
6
18
23
3
25
5
4
17
B
20
33
32
21
25
24
5
17
4
29
28
27
A
7
36
19
B
34
26
30
2
1
A
35
31
8
1
14
13
12
11
10
9

TEL00713

DRAWING 27B - LICENSE PLATE HOLDER - TAILLIGHT AUS [MOD:MS1200-A;XST:AUS]

GROUP ELECTRIC

POS.	CODE	DESCRIPTION	QTY	START DATE	END DATE	VALIDITY	NOTES
1	39110033A	BLADE	2			MOD:MS1200-A;XST:AUS	
2	77211231A	SCREW	4			MOD:MS1200-A;XST:AUS	
3	53010225A	FLASHER LIGHT FRONT LH - REAR RH	1			MOD:MS1200-A;XST:AUS	
4	39040211A	BULB	2			MOD:MS1200-A;XST:AUS	
5	7131A031A	SPACER	2			MOD:MS1200-A;XST:AUS	
6	56110461D	PLATE HOLDER	1			MOD:MS1200-A;XST:AUS	
7	77550131A	SCREW	2			MOD:MS1200-A;XST:AUS	
8	56110261A	NUMBER PLATE HOLDER	1			MOD:MS1200-A;XST:AUS	
9	52910061B	REFLEX REFLECTOR, REAR	1			MOD:MS1200-A;XST:AUS	
10	82712981B	BRACKET, REFLECTOR	1			MOD:MS1200-A;XST:AUS	
11	85250011C	WASHER 4.3X9X0.8	2			MOD:MS1200-A;XST:AUS	
12	74950011B	NUT, SPRING	2			MOD:MS1200-A;XST:AUS	
13	24713331A	LENS, LICENCE LIGHT	1			MOD:MS1200-A;XST:AUS	
14	39040162A	BULB 12V-5W C5W	1			MOD:MS1200-A;XST:AUS	
15	76410241A	VIBRATION DAMPER PAD	4			MOD:MS1200-A;XST:AUS	
16	77916631A	SCREW, SPECIAL	4			MOD:MS1200-A;XST:AUS	
17	85040471A	QUICK FASTENING M5	3			MOD:MS1200-A;XST:AUS	
18	85040551A	QUICK FASTENING	2			MOD:MS1200-A;XST:AUS	
19	77240323C	SCREW	2			MOD:MS1200-A;XST:AUS	
20	24713461D	MUDFLAP	1			MOD:MS1200-A;XST:AUS	
21	53010235A	FLASHER LIGHT FRONT RH- REAR LH	1			MOD:MS1200-A;XST:AUS	
22	52510382A	TAILLIGHT	1			MOD:MS1200-A;XST:AUS	
23	77240278C	SCREW	2			MOD:MS1200-A;XST:AUS	
24	85040381A	QUICK FASTENING	2			MOD:MS1200-A;XST:AUS	
25	77156398B	SCREW TCEIF M5X12	2			MOD:MS1200-A;XST:AUS	
26	83015483A	BRACKET	1			MOD:MS1200-A;XST:AUS	
27	76410901A	RUBBER PAD	1			MOD:MS1200-A;XST:AUS	
28	85241711A	WASHER 5.3X20X1.5	1			MOD:MS1200-A;XST:AUS	
29	77440061A	SCREW, TAPPING 4.5X16	1			MOD:MS1200-A;XST:AUS	
30	71319241A	SPACER	1			MOD:MS1200-A;XST:AUS	
31	71319341A	SPACER	1			MOD:MS1200-A;XST:AUS	
32	71314951A	SPACER	2			MOD:MS1200-A;XST:AUS	
33	56410921A	REAR MUDGUARD	1			MOD:MS1200-A;XST:AUS	
34	77240263C	SCREW	1			MOD:MS1200-A;XST:AUS	
35	74941118B	NUT 6MM	1			MOD:MS1200-A;XST:AUS	

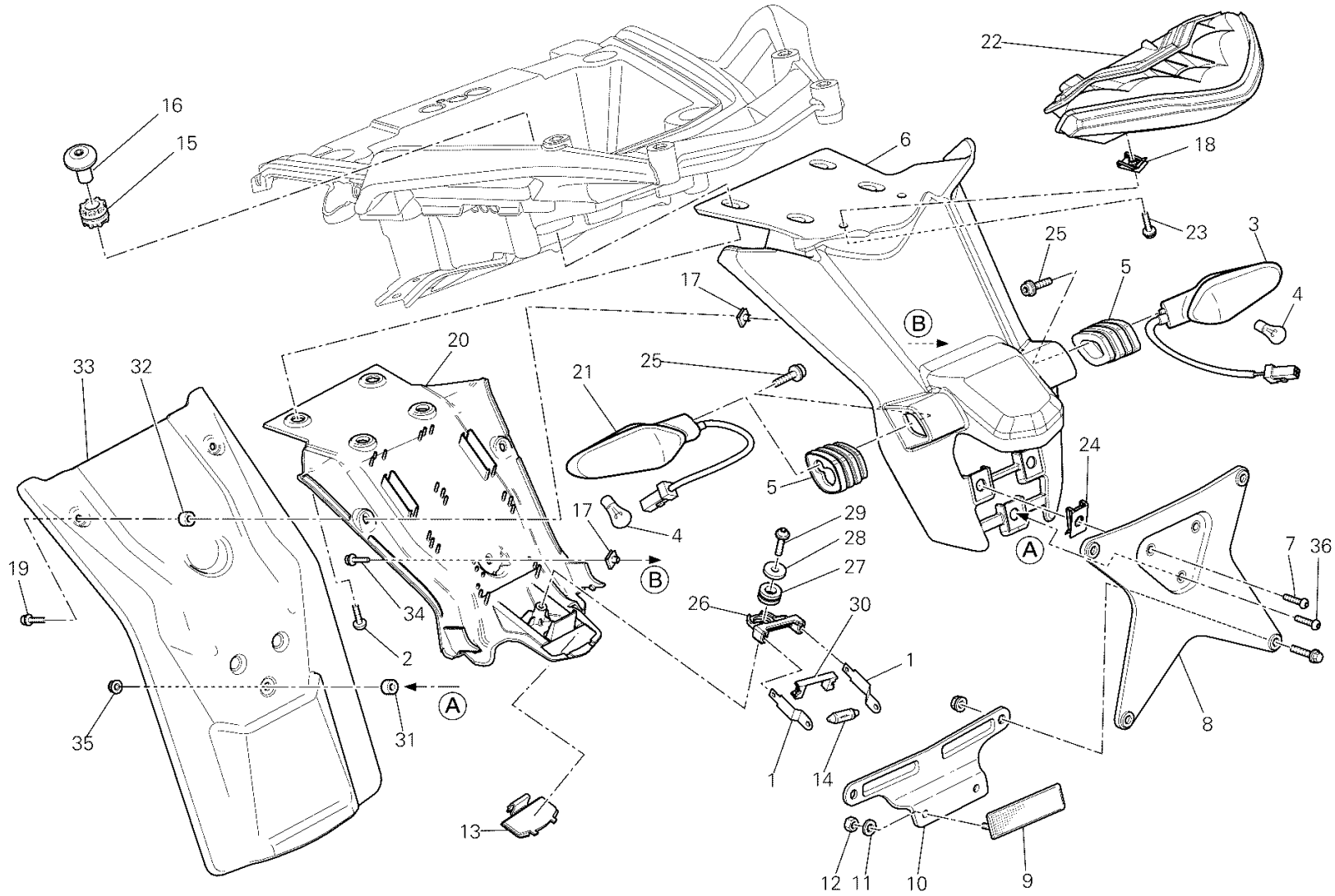
16
15
22
6
18
23
3
25
5
4
17
B
20
33
32
21
25
24
5
17
4
29
28
27
A
7
36
19
B
34
26
30
2
1
A
35
31
8
1
14
13
12
11
10
9

TEL00713

DRAWING 27B - LICENSE PLATE HOLDER - TAILLIGHT AUS [MOD:MS1200-A;XST:AUS]

GROUP ELECTRIC

POS.	CODE	DESCRIPTION	QTY	START DATE	END DATE	VALIDITY	NOTES
36	77510491A	SCREW TBEI M6X30	1			MOD:MS1200-A;XST:AUS	

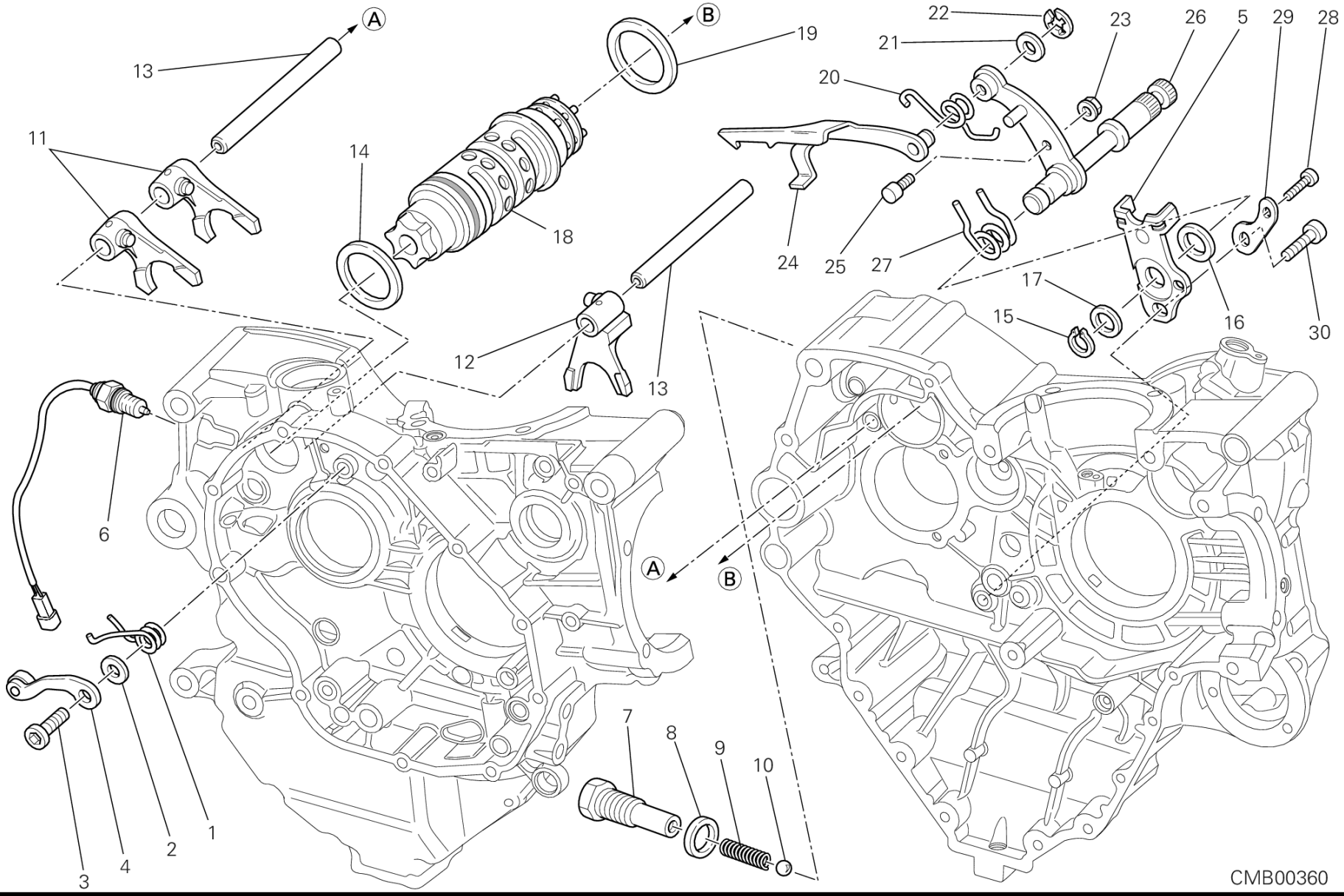
A
B
13
19
22
21
23
26
5
29
28
20
11
14
18
24
25
27
17
15
16
30
12
13
6
A
B
7
8
9
10
3
4
2
1
CMB00360

DRAWING 002 - GEAR CHANGE MECHANISM [MOD:MS1200-A;XST:AUS,CHN,EUR,FRA,JAP,THAI]

GROUP ENGINE

POS.	CODE	DESCRIPTION	QTY	START DATE	END DATE	VALIDITY	NOTES
1	79910491A	SPRING, RETURN	1	12/03/2012		MOD:MS1200-A;XST:AUS,CHN,EUR,FRA,JAP,THAI	
2	85210532A	WASHER 8.2X20X1	1	12/03/2012		MOD:MS1200-A;XST:AUS,CHN,EUR,FRA,JAP,THAI	
3	77910391A	SCREW M8X21.5	1	12/03/2012		MOD:MS1200-A;XST:AUS,CHN,EUR,FRA,JAP,THAI	
4	45520181A	GEAR FIXING CLICK ASSEMBLY	1	12/03/2012		MOD:MS1200-A;XST:AUS,CHN,EUR,FRA,JAP,THAI	
5	82610293A	STOPPER PLATE	1	03/05/2012		MOD:MS1200-A;XST:AUS,CHN,EUR,FRA,JAP,THAI	
6	55241612C	GEARBOX POSITION SENSOR	1	28/09/2011		MOD:MS1200-A;XST:AUS,CHN,EUR,FRA,JAP,THAI	
7	77912033A	SCREW M16X1.5	1	16/05/2011		MOD:MS1200-A;XST:AUS,CHN,EUR,FRA,JAP,THAI	
8	027291090	GASKET 16.2X24X2	1	16/05/2011		MOD:MS1200-A;XST:AUS,CHN,EUR,FRA,JAP,THAI	
9	066013143	GEAR SELECTOR SPRING	1	16/05/2011		MOD:MS1200-A;XST:AUS,CHN,EUR,FRA,JAP,THAI	
10	768351134	BALL 11MM	1	16/05/2011		MOD:MS1200-A;XST:AUS,CHN,EUR,FRA,JAP,THAI	
11	180Z0031A	GEAR SELECTOR FORK,1ST/4TH-2ND/3RD	2	16/05/2011		MOD:MS1200-A;XST:AUS,CHN,EUR,FRA,JAP,THAI	
12	180Z0041A	FORK-SHIFT, 5TH&6TH	1	16/05/2011		MOD:MS1200-A;XST:AUS,CHN,EUR,FRA,JAP,THAI	
13	82112681A	AXLE, GEAR SHIFT FORK	2	16/05/2011		MOD:MS1200-A;XST:AUS,CHN,EUR,FRA,JAP,THAI	
14	85210051A	THRUST WASHER 1 MM	1	16/05/2011		MOD:MS1200-A;XST:AUS,CHN,EUR,FRA,JAP,THAI	
15	735001542	CIRCLIP 15 DIN 471	1	03/05/2012		MOD:MS1200-A;XST:AUS,CHN,EUR,FRA,JAP,THAI	
16	88110121A	CENTERING RING	1	03/05/2012		MOD:MS1200-A;XST:AUS,CHN,EUR,FRA,JAP,THAI	
17	040029125	THRUST WASHER 15.5X22X0.2	2	03/05/2012		MOD:MS1200-A;XST:AUS,CHN,EUR,FRA,JAP,THAI	

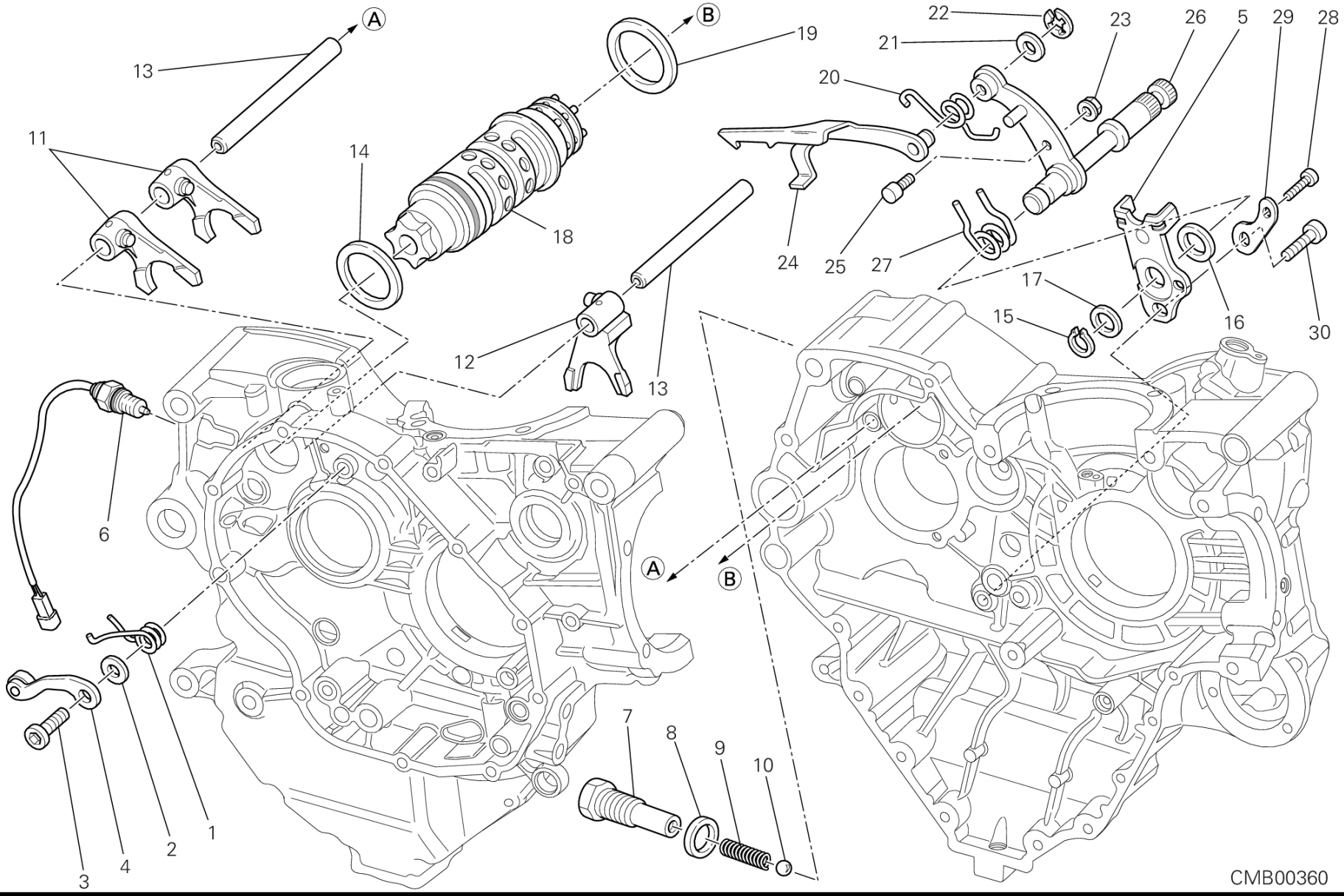
A
B
13
19
22
21
23
26
5
29
28
20
11
14
18
24
25
27
17
15
16
30
12
13
6
A
B
7
8
9
10
1
2
3
4
CMB00360

POS.	CODE	DESCRIPTION	QTY	START DATE	END DATE	VALIDITY	NOTES
	040029126	THRUST WASHER 15.5X22X0.5	1	03/05/2012		MOD:MS1200-A;XST:AUS,CHN,EUR,FRA,JAP,THAI	
18	18220521A	COMPLETE GEARBOX DRUM	1	25/06/2012		MOD:MS1200-A;XST:AUS,CHN,EUR,FRA,JAP,THAI	
19	85210941A	THRUST WASHER 45.2X49X0.9	1	16/05/2011		MOD:MS1200-A;XST:AUS,CHN,EUR,FRA,JAP,THAI	
20	79914821A	RETURN SPRING	1	03/05/2012		MOD:MS1200-A;XST:AUS,CHN,EUR,FRA,JAP,THAI	
21	040009050	THRUST WASHER 10.5X16X0.5	1	03/05/2012		MOD:MS1200-A;XST:AUS,CHN,EUR,FRA,JAP,THAI	
	076592205	THRUST WASHER 10.5X15X0.2	2	03/05/2012		MOD:MS1200-A;XST:AUS,CHN,EUR,FRA,JAP,THAI	
22	88450341B	SPRING RING	1			MOD:MS1200-A;XST:AUS,CHN,EUR,FRA,JAP,THAI	
23	74810401A	NUT, FLANGE	1	03/05/2012		MOD:MS1200-A;XST:AUS,CHN,EUR,FRA,JAP,THAI	
24	18010081A	CONTROL FORK	1	03/05/2012		MOD:MS1200-A;XST:AUS,CHN,EUR,FRA,JAP,THAI	
25	066013165	GEARCHANGE LEVER PIN	1	03/05/2012		MOD:MS1200-A;XST:AUS,CHN,EUR,FRA,JAP,THAI	
26	82110011A	GEAR SELECTOR SHAFT	1	03/05/2012		MOD:MS1200-A;XST:AUS,CHN,EUR,FRA,JAP,THAI	
27	079913110	SPRING, SHIFT RETURN	1	03/05/2012		MOD:MS1200-A;XST:AUS,CHN,EUR,FRA,JAP,THAI	
28	77150670ZF	SCREW	1	18/09/2012		MOD:MS1200-A;XST:AUS,CHN,EUR,FRA,JAP,THAI	
29	71319151A	SPACER	1	16/05/2011		MOD:MS1200-A;XST:AUS,CHN,EUR,FRA,JAP,THAI	
30	77151250ZF	SCREW	1	18/09/2012		MOD:MS1200-A;XST:AUS,CHN,EUR,FRA,JAP,THAI	

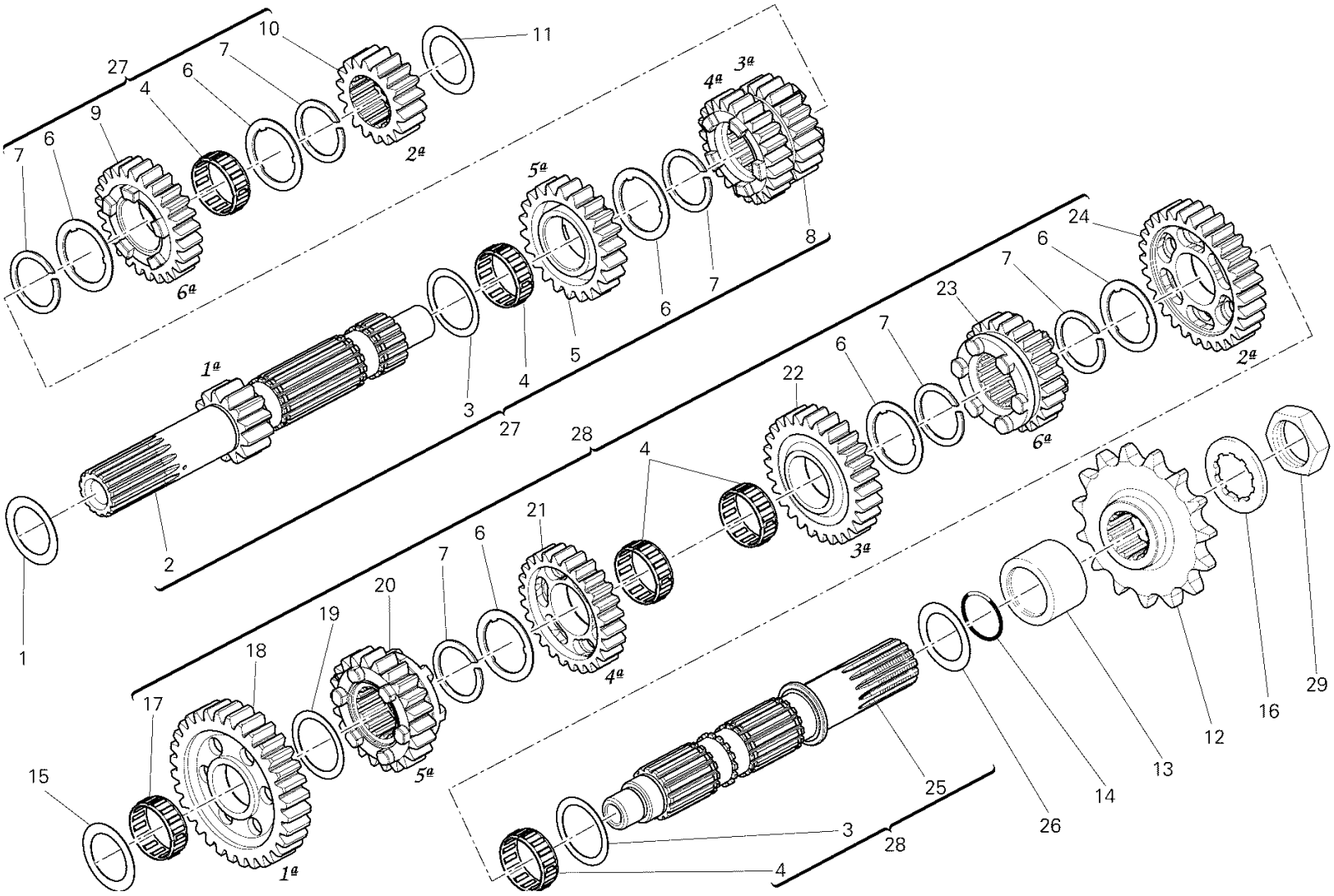
1ª
2ª
3ª
4ª
5ª
6ª
1
2
3
4
5
6
7
8
9
10
11
12
13
14
15
16
17
18
19
20
21
22
23
24
25
26
27
28
29

CMB00245

POS.	CODE	DESCRIPTION	QTY	START DATE	END DATE	VALIDITY	NOTES
1	025147054	THRUST WASHER 25.2X32.5X1.2	1	16/05/2011		MOD:MS1200-A;XST:AUS,CHN,EUR,FRA,JAP,THAI	
2	14910831B	GEARBOX MAIN SHAFT	1	24/12/2009		MOD:MS1200-A;XST:AUS,CHN,EUR,FRA,JAP,THAI	
3	067016150	THRUST WASHER 0.5 MM	2	24/12/2009		MOD:MS1200-A;XST:AUS,CHN,EUR,FRA,JAP,THAI	
4	70140051A	BEARING, NEEDLE	5	24/12/2009		MOD:MS1200-A;XST:AUS,CHN,EUR,FRA,JAP,THAI	
5	17213291A	DRIVING GEAR 5TH SP.	1	24/12/2009		MOD:MS1200-A;XST:AUS,CHN,EUR,FRA,JAP,THAI	
6	85611372A	WASHER LOCK 28X32.5X1	6	24/12/2009		MOD:MS1200-A;XST:AUS,CHN,EUR,FRA,JAP,THAI	
7	88210151A	SPRING RING 25X29X2.4	6	24/12/2009		MOD:MS1200-A;XST:AUS,CHN,EUR,FRA,JAP,THAI	
8	17213281A	DRIVING GEAR 3RD/4TH SP.	1	24/12/2009		MOD:MS1200-A;XST:AUS,CHN,EUR,FRA,JAP,THAI	
9	17213301A	DRIVING GEAR 6TH SP.	1	24/12/2009		MOD:MS1200-A;XST:AUS,CHN,EUR,FRA,JAP,THAI	
10	17213271A	DRIVING GEAR 2ND SP.	1	24/12/2009		MOD:MS1200-A;XST:AUS,CHN,EUR,FRA,JAP,THAI	
11	71310141E	THRUST WASHER 20.3X32X1.6	1	16/05/2011		MOD:MS1200-A;XST:AUS,CHN,EUR,FRA,JAP,THAI	
12	44910571A	CHAIN SPROCKET Z=15	1	09/03/2012		MOD:MS1200-A;XST:AUS,CHN,EUR,FRA,JAP,THAI	
13	71313931A	SPACER, ENGINE SPROCKET	1	16/05/2011		MOD:MS1200-A;XST:AUS,CHN,EUR,FRA,JAP,THAI	
14	46320537A	O-RING	1	16/05/2011		MOD:MS1200-A;XST:AUS,CHN,EUR,FRA,JAP,THAI	
15	71312661A	THRUST WASHER 17.3X31X3.15	1	16/05/2011		MOD:MS1200-A;XST:AUS,CHN,EUR,FRA,JAP,THAI	
16	85110041A	WASHER, LOCK	1	09/03/2012		MOD:MS1200-A;XST:AUS,CHN,EUR,FRA,JAP,THAI	
17	764020002	BEARING, NEEDLE	1	24/12/2009		MOD:MS1200-A;XST:AUS,CHN,EUR,FRA,JAP,THAI	

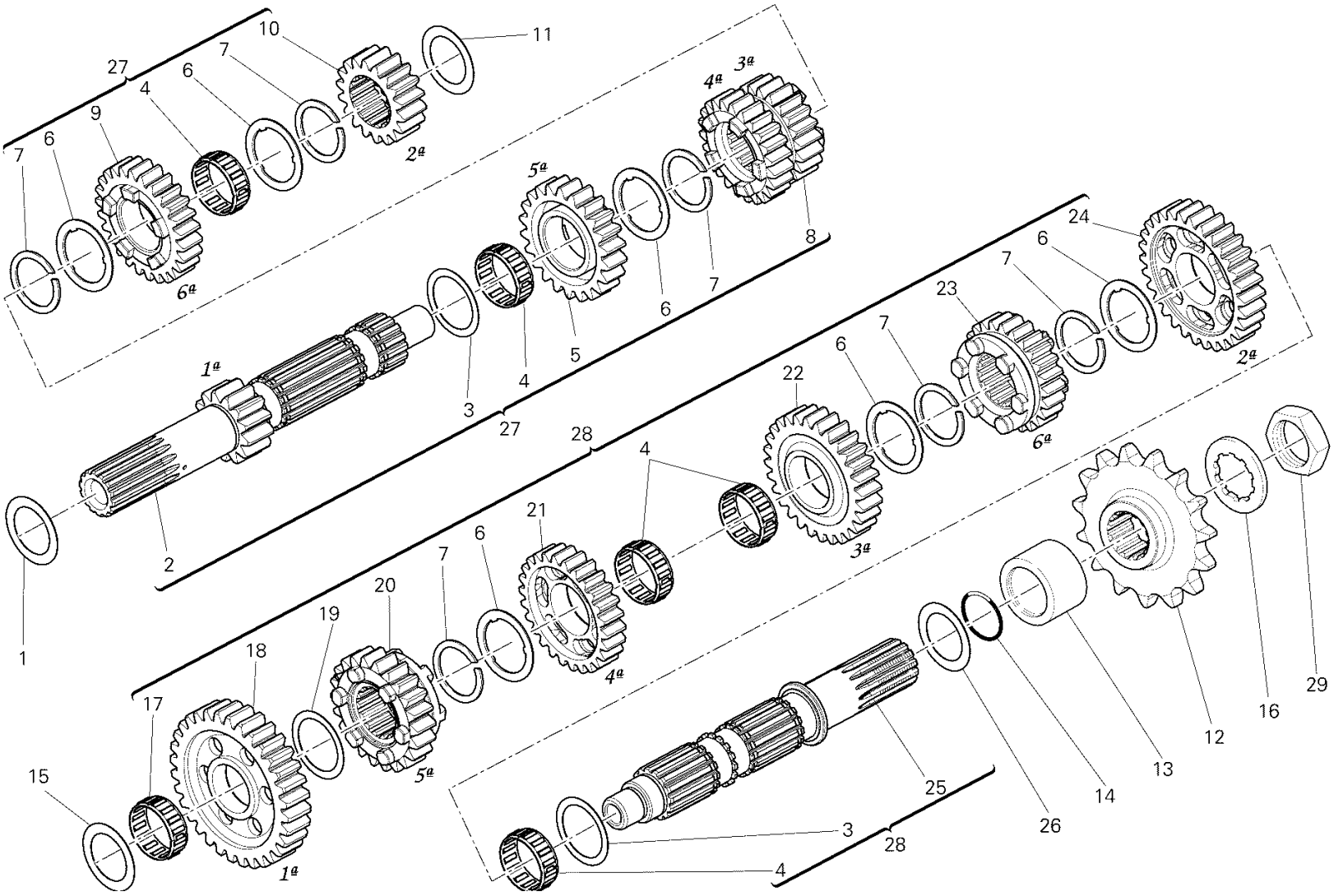
1ª
2ª
3ª
4ª
5ª
6ª
1
2
3
4
5
6
7
8
9
10
11
12
13
14
15
16
17
18
19
20
21
22
23
24
25
26
27
28
29

CMB00245

POS.	CODE	DESCRIPTION	QTY	START DATE	END DATE	VALIDITY	NOTES
18	17213311A	DRIVEN GEAR 1ST SP.	1	24/12/2009		MOD:MS1200-A;XST:AUS,CHN,EUR,FRA,JAP,THAI	
19	067016155	THRUST WASHER 1 MM	1	24/12/2009		MOD:MS1200-A;XST:AUS,CHN,EUR,FRA,JAP,THAI	
20	17213351A	DRIVEN GEAR 5TH SP.	1	24/12/2009		MOD:MS1200-A;XST:AUS,CHN,EUR,FRA,JAP,THAI	
21	17213341A	DRIVEN GEAR 4TH SP.	1	24/12/2009		MOD:MS1200-A;XST:AUS,CHN,EUR,FRA,JAP,THAI	
22	17213331C	DRIVEN GEAR 3RD SP.	1	24/12/2009		MOD:MS1200-A;XST:AUS,CHN,EUR,FRA,JAP,THAI	
23	17213361A	DRIVEN GEAR 6TH SP.	1	24/12/2009		MOD:MS1200-A;XST:AUS,CHN,EUR,FRA,JAP,THAI	
24	17213321A	DRIVEN GEAR 2ND SP.	1	24/12/2009		MOD:MS1200-A;XST:AUS,CHN,EUR,FRA,JAP,THAI	
25	14910821A	DRIVEN SHAFT	1	24/12/2009		MOD:MS1200-A;XST:AUS,CHN,EUR,FRA,JAP,THAI	
26	067016170	THRUST WASHER 0.8 MM	1	16/05/2011		MOD:MS1200-A;XST:AUS,CHN,EUR,FRA,JAP,THAI	
27	15021431B	COMPLETE MAIN SHAFT	1	24/12/2009		MOD:MS1200-A;XST:AUS,CHN,EUR,FRA,JAP,THAI	
28	15021412A	COMPLETE LAY SHAFT	1	24/12/2009		MOD:MS1200-A;XST:AUS,CHN,EUR,FRA,JAP,THAI	
29	75010071A	NUT M25X1.5	1	16/05/2011		MOD:MS1200-A;XST:AUS,CHN,EUR,FRA,JAP,THAI	

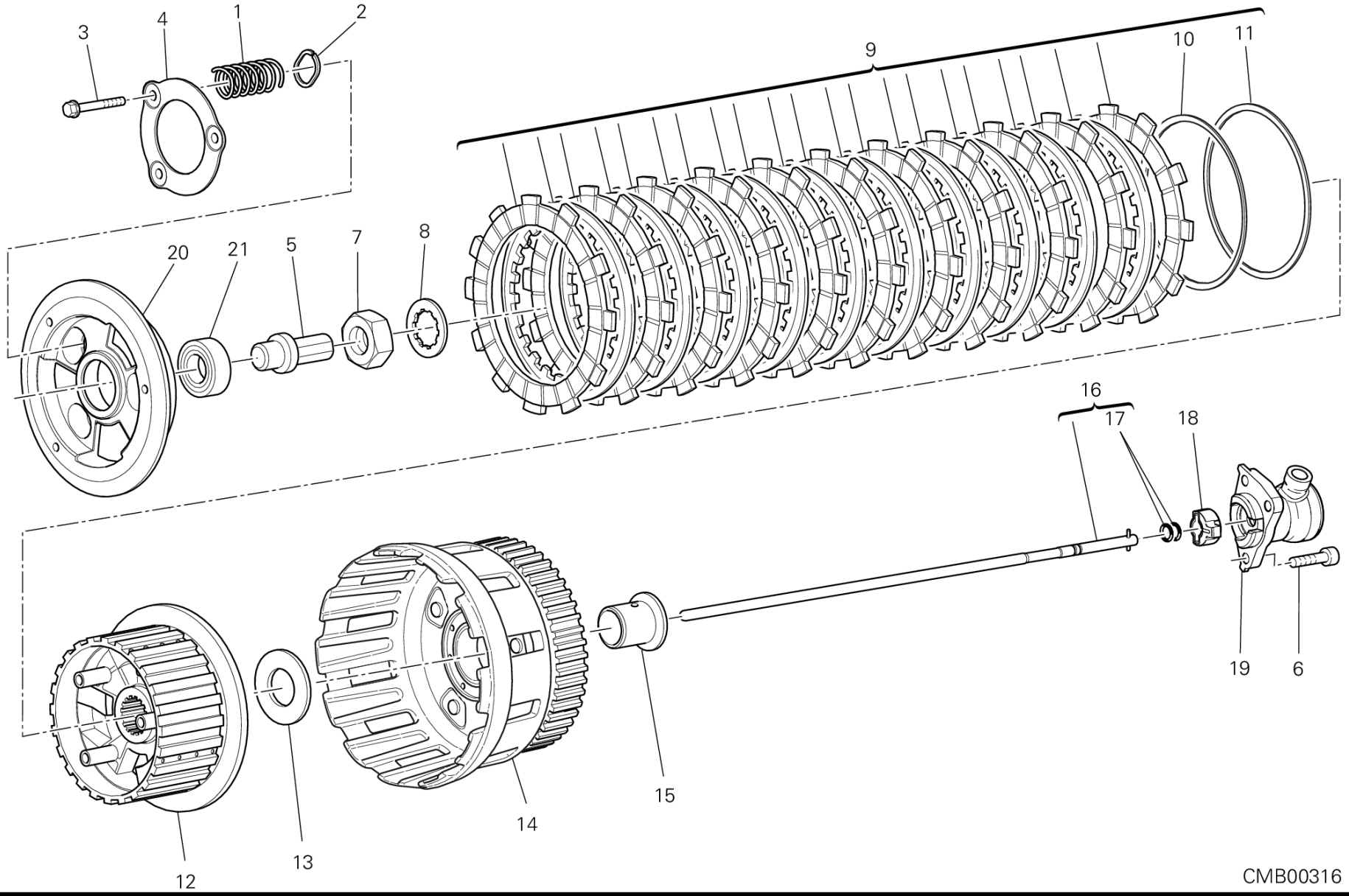
3
4
1
2
9
10
11
20
21
5
7
8
16
17
18
19
6
15
14
13
12
CMB00316

POS.	CODE	DESCRIPTION	QTY	START DATE	END DATE	VALIDITY	NOTES
1	79710531A	SPRING	3	16/05/2011		MOD:MS1200-A;XST:AUS,CHN,EUR,FRA,JAP,THAI	
2	85611391A	THRUST WASHER	3	01/05/2010		MOD:MS1200-A;XST:AUS,CHN,EUR,FRA,JAP,THAI	
3	77211201A	SCREW	3	01/05/2010		MOD:MS1200-A;XST:AUS,CHN,EUR,FRA,JAP,THAI	
4	19410511A	RING	1	02/05/2012		MOD:MS1200-A;XST:AUS,CHN,EUR,FRA,JAP,THAI	
5	81810162A	CLUTCH CONTROL PIN (FCC)	1	16/05/2011		MOD:MS1200-A;XST:AUS,CHN,EUR,FRA,JAP,THAI	
6	77156678B	SCREW TCEIF M6X20	3	09/03/2012		MOD:MS1200-A;XST:AUS,CHN,EUR,FRA,JAP,THAI	
7	75010071A	NUT M25X1.5	1	16/05/2011		MOD:MS1200-A;XST:AUS,CHN,EUR,FRA,JAP,THAI	
8	85110201A	LOCK WASHER	1	16/05/2011		MOD:MS1200-A;XST:AUS,CHN,EUR,FRA,JAP,THAI	
9	19020232A	CLUTCH DISC SET	1	01/05/2010		MOD:MS1200-A;XST:AUS,CHN,EUR,FRA,JAP,THAI	
10	79912781A	SPRING WASHER "FCC"	1	15/02/2010		MOD:MS1200-A;XST:AUS,CHN,EUR,FRA,JAP,THAI	
11	19010421A	SPACER TH. 1,2	1	15/02/2010		MOD:MS1200-A;XST:AUS,CHN,EUR,FRA,JAP,THAI	
12	19610532A	PLATE HOLDER HUB (FCC)	1	02/05/2012		MOD:MS1200-A;XST:AUS,CHN,EUR,FRA,JAP,THAI	
13	71313091A	SPACER 25.2X46X2	1	01/05/2010		MOD:MS1200-A;XST:AUS,CHN,EUR,FRA,JAP,THAI	
14	19820391A	CLUTCH HOUSING	1	01/05/2010		MOD:MS1200-A;XST:AUS,CHN,EUR,FRA,JAP,THAI	
15	71314831A	SPACER	1	01/05/2010		MOD:MS1200-A;XST:AUS,CHN,EUR,FRA,JAP,THAI	
16	11721112A	CLUTCH CONTROL ROD	1	15/11/2011		MOD:MS1200-A;XST:AUS,CHN,EUR,FRA,JAP,THAI	
17	88641731A	O-RING 1.78X4.76	2	18/07/2011		MOD:MS1200-A;XST:AUS,CHN,EUR,FRA,JAP,THAI	

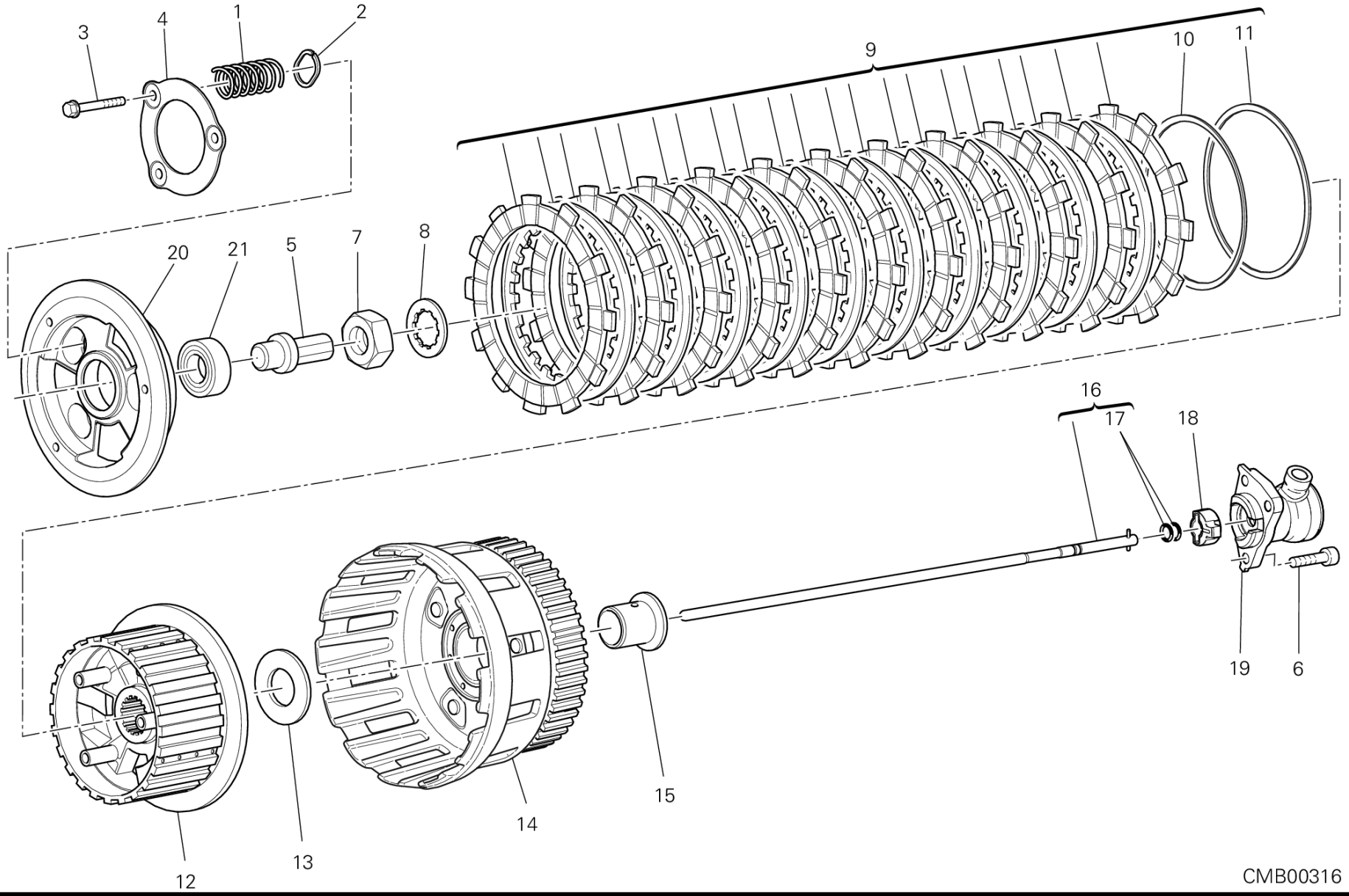
3
4
1
2
9
10
11
20
21
5
7
8
16
17
18
19
6
15
14
13
12
CMB00316

POS.	CODE	DESCRIPTION	QTY	START DATE	END DATE	VALIDITY	NOTES
18	71319261A	ANTI-ROTATION INSERT	1	09/03/2012		MOD:MS1200-A;XST:AUS,CHN,EUR,FRA,JAP,THAI	
19	19540032B	PISTON ASSEMBLY	1	01/02/2012		MOD:MS1200-A;XST:AUS,CHN,EUR,FRA,JAP,THAI	
20	19610542A	DISK, CLUTCH PRESSURE (FCC)	1	02/05/2012		MOD:MS1200-A;XST:AUS,CHN,EUR,FRA,JAP,THAI	
21	70250601A	BEARING	1	01/05/2010		MOD:MS1200-A;XST:AUS,CHN,EUR,FRA,JAP,THAI	

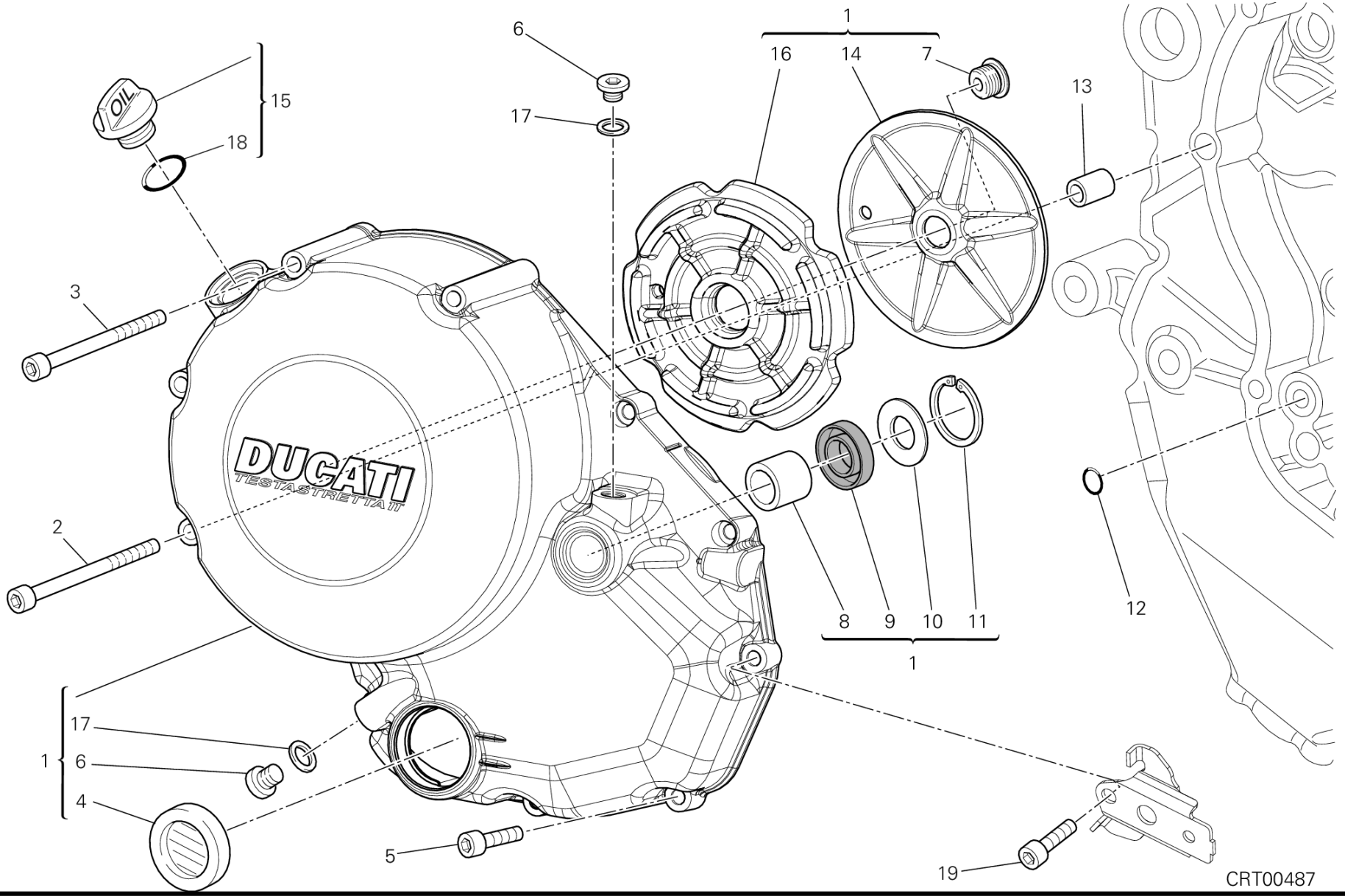
1
16
14
7
6
17
15
18
13
3
2
8
9
10
11
1
12
1
17
6
4
5
19
CRT00487

POS.	CODE	DESCRIPTION	QTY	START DATE	END DATE	VALIDITY	NOTES
1	24321331BE	COVER CLUTCH SIDE BLACK	1	18/06/2012		MOD:MS1200-A;XST:AUS,CHN,EUR,FRA,JAP,THAI	
2	77150833B	SCREW	1	16/05/2011		MOD:MS1200-A;XST:AUS,CHN,EUR,FRA,JAP,THAI	
3	77150813B	SCREW	3	16/05/2011		MOD:MS1200-A;XST:AUS,CHN,EUR,FRA,JAP,THAI	
4	25440012A	WINDOW, OIL LEVEL CHECK	1	01/01/2011		MOD:MS1200-A;XST:AUS,CHN,EUR,FRA,JAP,THAI	
5	77150693B	SCREW	5	16/05/2011		MOD:MS1200-A;XST:AUS,CHN,EUR,FRA,JAP,THAI	
6	78050012A	PLUG, THREADED M10X1	1	01/01/2011		MOD:MS1200-A;XST:AUS,CHN,EUR,FRA,JAP,THAI	
7	77915011A	SCREW	1	01/01/2011		MOD:MS1200-A;XST:AUS,CHN,EUR,FRA,JAP,THAI	
8	066549680	BUSH	1	01/01/2011		MOD:MS1200-A;XST:AUS,CHN,EUR,FRA,JAP,THAI	
9	93040211A	OIL SEAL	1	01/01/2011		MOD:MS1200-A;XST:AUS,CHN,EUR,FRA,JAP,THAI	
10	85211351A	THRUST WASHER 20.8X37.8X1	1	01/01/2011		MOD:MS1200-A;XST:AUS,CHN,EUR,FRA,JAP,THAI	
11	88450131A	CIRCLIP	1	01/01/2011		MOD:MS1200-A;XST:AUS,CHN,EUR,FRA,JAP,THAI	
12	88641321A	O-RING 11.11X1.78	1	25/09/2012		MOD:MS1200-A;XST:AUS,CHN,EUR,FRA,JAP,THAI	
13	71111601A	PIN DOWEL	1	16/05/2011		MOD:MS1200-A;XST:AUS,CHN,EUR,FRA,JAP,THAI	
14	82714331A	PLATE, SOUND ARRESTER DAMPER	1	01/01/2011		MOD:MS1200-A;XST:AUS,CHN,EUR,FRA,JAP,THAI	
15	89320121A	PLUG ASSY	1	01/01/2011		MOD:MS1200-A;XST:AUS,CHN,EUR,FRA,JAP,THAI	
16	48610721A	DAMPER, SOUND ARRESTER	1	01/01/2011		MOD:MS1200-A;XST:AUS,CHN,EUR,FRA,JAP,THAI	
17	85250241A	WASHER 10X14X1	2	01/01/2011		MOD:MS1200-A;XST:AUS,CHN,EUR,FRA,JAP,THAI	

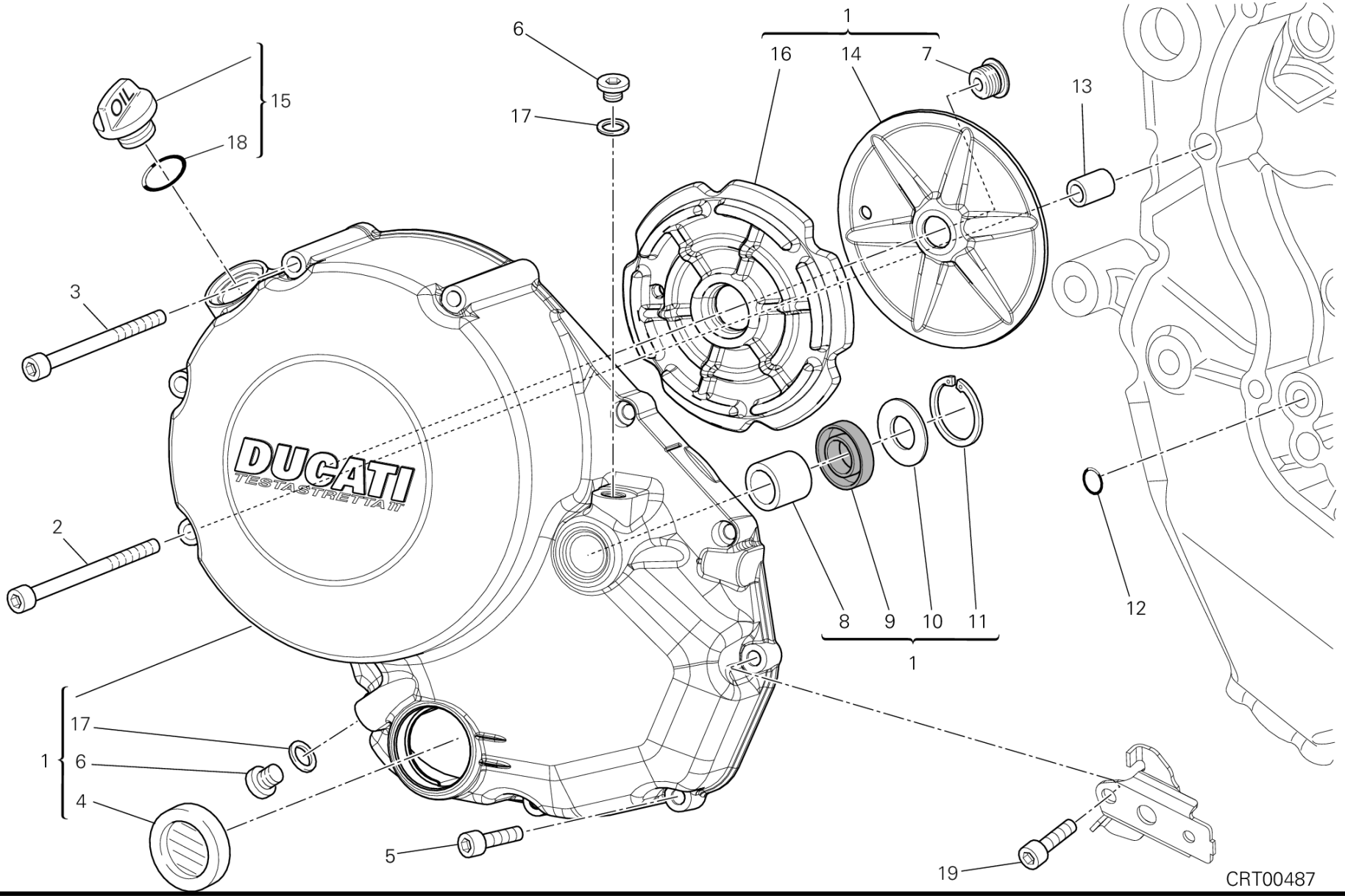
1
16
14
7
6
17
15
18
13
3
2
8
9
10
11
1
12
1
17
6
4
5
19
CRT00487

POS.	CODE	DESCRIPTION	QTY	START DATE	END DATE	VALIDITY	NOTES
18	88640891A	O-RING 18.64X3.53	1	24/12/2009		MOD:MS1200-A;XST:AUS,CHN,EUR,FRA,JAP,THAI	
19	77150713B	SCREW	1	16/05/2011		MOD:MS1200-A;XST:AUS,CHN,EUR,FRA,JAP,THAI	

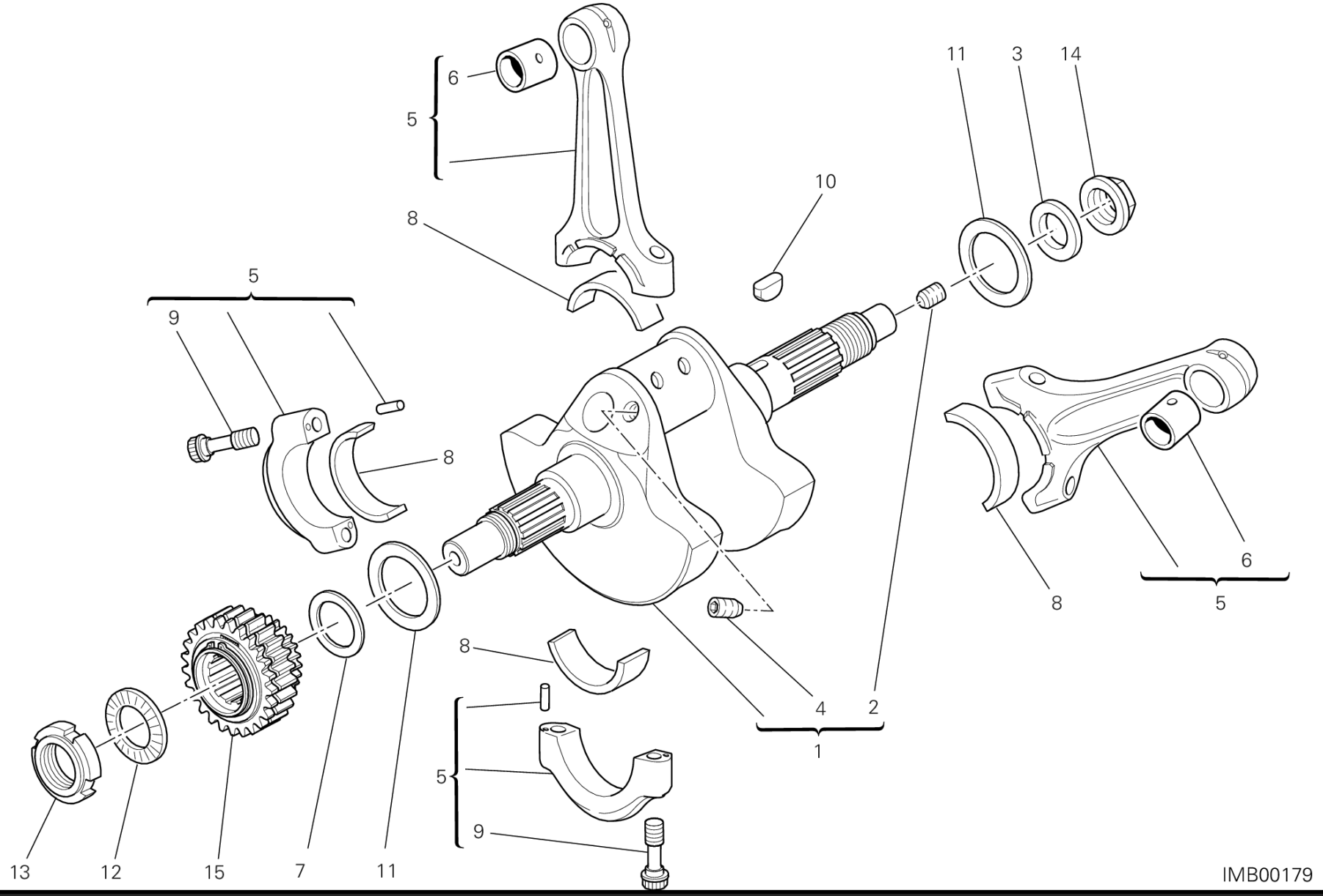
6
5
8
10
11
3
14
5
9
8
8
6
5
8
4
2
1
5
9
13
12
15
7
11
IMB00179

POS.	CODE	DESCRIPTION	QTY	START DATE	END DATE	VALIDITY	NOTES
1	14621862AR	CRANKSHAFT	1	24/09/2012		MOD:MS1200-A;XST:AUS,CHN,EUR,FRA,JAP,THAI	
2	77911092A	SCREW, SPECIAL	1	02/07/2012		MOD:MS1200-A;XST:AUS,CHN,EUR,FRA,JAP,THAI	
3	85213231A	WASHER, THRUST	1	27/06/2012		MOD:MS1200-A;XST:AUS,CHN,EUR,FRA,JAP,THAI	
4	77915471A	THREADED DOWEL STEI M8X8	2	02/07/2012		MOD:MS1200-A;XST:AUS,CHN,EUR,FRA,JAP,THAI	
5	15820234A	CONNECTING RODS PAIR	1	14/10/2011		MOD:MS1200-A;XST:AUS,CHN,EUR,FRA,JAP,THAI	
6	71110891A	PLANE BEARING, CONNECTING ROD	2	01/01/2011		MOD:MS1200-A;XST:AUS,CHN,EUR,FRA,JAP,THAI	
7	71011691A	SPACER	1	16/05/2011		MOD:MS1200-A;XST:AUS,CHN,EUR,FRA,JAP,THAI	
8	11210121AB	PLANE BEARING, CONNECTING ROD BLUE	4	16/05/2011		MOD:MS1200-A;XST:AUS,CHN,EUR,FRA,JAP,THAI	
	11210121AC	PLANE BEARING, CONNECTING ROD YELLOW	4	16/05/2011		MOD:MS1200-A;XST:AUS,CHN,EUR,FRA,JAP,THAI	
9	77914043B	BOLT, CONNECTING ROD	4	01/01/2011		MOD:MS1200-A;XST:AUS,CHN,EUR,FRA,JAP,THAI	
10	68010131A	KEY, WOODRUFF 4X5X10	1	16/05/2011		MOD:MS1200-A;XST:AUS,CHN,EUR,FRA,JAP,THAI	
11	85212881D	THRUST WASHER	2	12/10/2011		MOD:MS1200-A;XST:AUS,CHN,EUR,FRA,JAP,THAI	
12	85140051A	LOCK WASHER	1	16/05/2011		MOD:MS1200-A;XST:AUS,CHN,EUR,FRA,JAP,THAI	
13	75011561A	RING NUT	1	16/05/2011		MOD:MS1200-A;XST:AUS,CHN,EUR,FRA,JAP,THAI	
14	75011761A	NUT, SPECIAL	1	27/06/2012		MOD:MS1200-A;XST:AUS,CHN,EUR,FRA,JAP,THAI	
15	17021251A	PRIMARY DRIVE FRONT SPROCKET	1	02/05/2012		MOD:MS1200-A;XST:AUS,CHN,EUR,FRA,JAP,THAI	

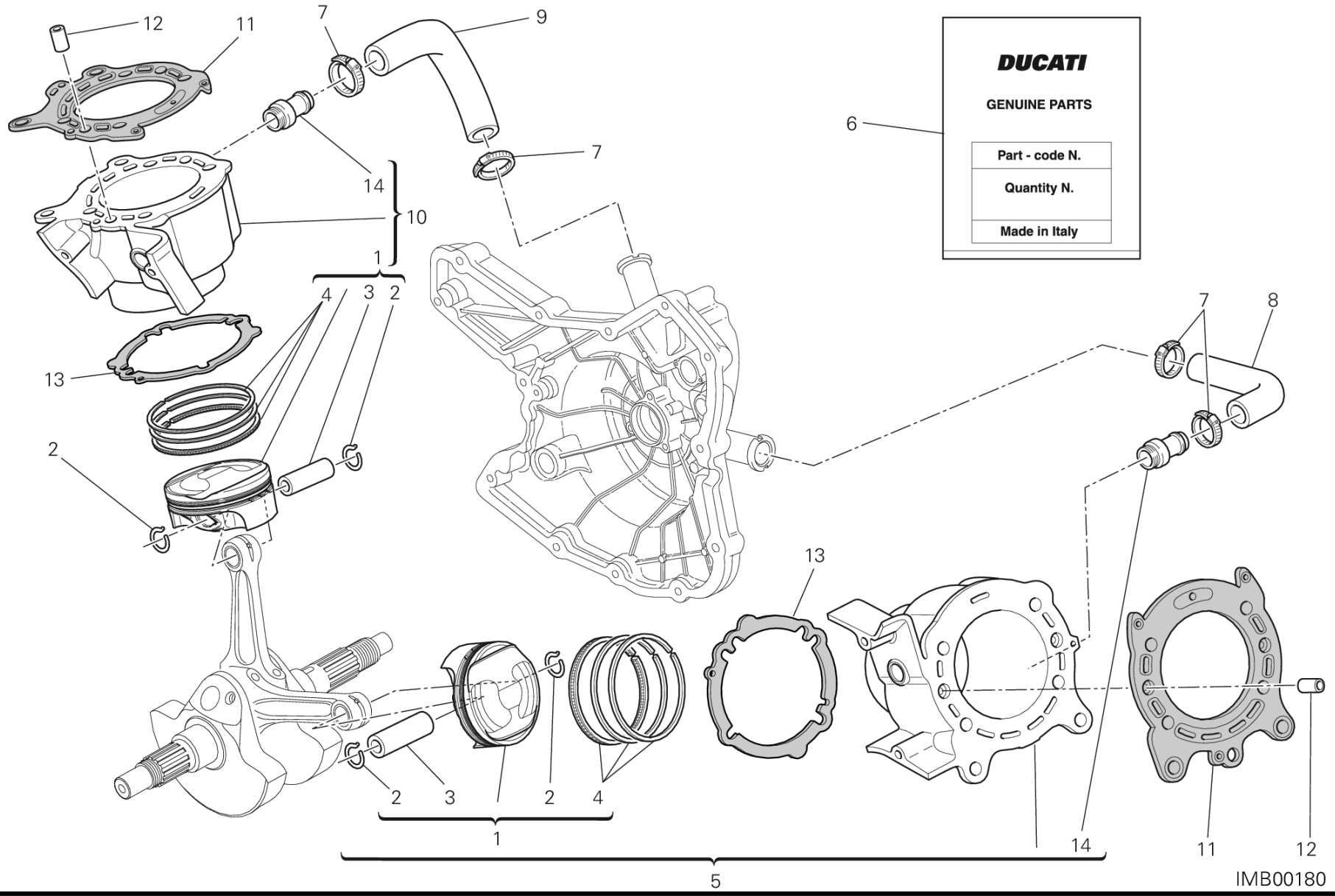
DUCATI
GENUINE PARTS
Part - code N.
Quantity N.
Made in Italy
IMB00180

POS.	CODE	DESCRIPTION	QTY	START DATE	END DATE	VALIDITY	NOTES
1	12221693A	PISTON ASSY	2	01/10/2010		MOD:MS1200-A;XST:AUS,CHN,EUR,FRA,JAP,THAI	
2	12112481A	CIRCLIP, PISTON PIN	4	01/10/2010		MOD:MS1200-A;XST:AUS,CHN,EUR,FRA,JAP,THAI	
3	12110781B	PISTON PIN	2	01/10/2010		MOD:MS1200-A;XST:AUS,CHN,EUR,FRA,JAP,THAI	
4	12120521A	PISTON RING SET	1	01/10/2010		MOD:MS1200-A;XST:AUS,CHN,EUR,FRA,JAP,THAI	
5	12021724B	CYLINDER-PISTON FIT HORIZONTAL	1	16/05/2011		MOD:MS1200-A;XST:AUS,CHN,EUR,FRA,JAP,THAI	
6	79120482A	GASKETS SET	1	01/07/2012		MOD:MS1200-A;XST:AUS,CHN,EUR,FRA,JAP,THAI	
7	74141921A	CLAMP 16-27 MM	4	16/05/2011		MOD:MS1200-A;XST:AUS,CHN,EUR,FRA,JAP,THAI	
8	80011231A	HORIZONTAL CYLINDER WATER INLET HOSE	1	16/05/2011		MOD:MS1200-A;XST:AUS,CHN,EUR,FRA,JAP,THAI	
9	80011221A	VERTICAL CYLINDER WATER INLET HOSE	1	16/05/2011		MOD:MS1200-A;XST:AUS,CHN,EUR,FRA,JAP,THAI	
10	12021734B	CYLINDER-PISTON FIT VERTICAL	1	16/05/2011		MOD:MS1200-A;XST:AUS,CHN,EUR,FRA,JAP,THAI	
11	78611001A	GASKET, CYLINDER HEAD	2	02/03/2012		MOD:MS1200-A;XST:AUS,CHN,EUR,FRA,JAP,THAI	
12	71112191A	PIN DOWEL	4	16/05/2011		MOD:MS1200-A;XST:AUS,CHN,EUR,FRA,JAP,THAI	
13	78611251A	GASKET, CYLINDER	2	25/06/2012		MOD:MS1200-A;XST:AUS,CHN,EUR,FRA,JAP,THAI	
14	66810481A	WATER PUMP DELIVERY PIPE UNION	2	07/01/2010		MOD:MS1200-A;XST:AUS,CHN,EUR,FRA,JAP,THAI	

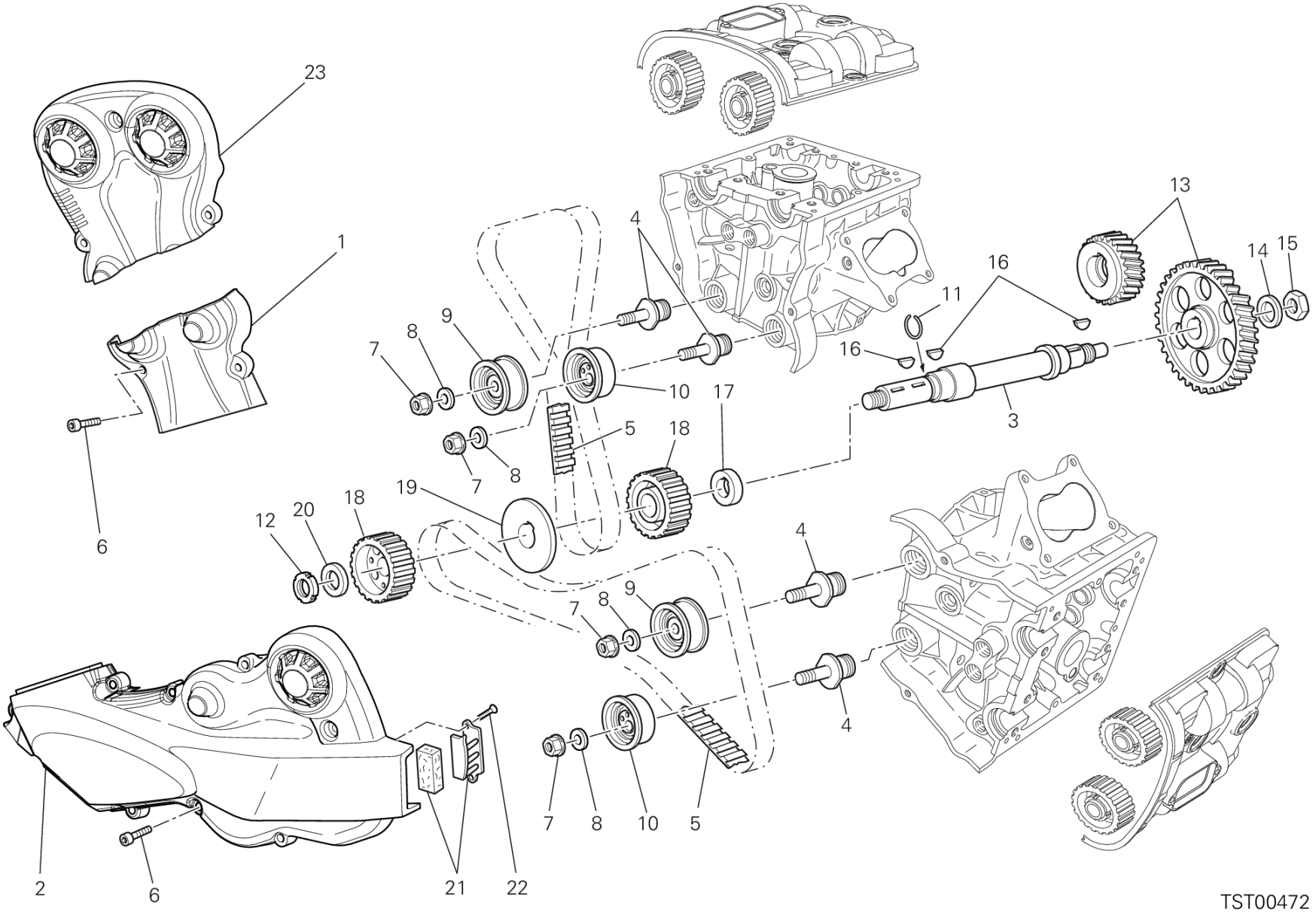
23
1
6
4
9
8
7
10
17
5
18
19
12
20
18
13
14
15
16
11
16
3
4
9
8
7
4
7
8
10
5
2
6
21
22
TST00472

POS.	CODE	DESCRIPTION	QTY	START DATE	END DATE	VALIDITY	NOTES
1	24511281A	VERTICAL BELT OUTER COVER BOTTOM	1	16/05/2011		MOD:MS1200-A;XST:AUS,CHN,EUR,FRA,JAP,THAI	
2	24511052A	HORIZONTAL BELT EXTERNAL COVER	1	24/12/2009		MOD:MS1200-A;XST:AUS,CHN,EUR,FRA,JAP,THAI	
3	14710811A	LAYSHAFT TIMING	1	16/05/2011		MOD:MS1200-A;XST:AUS,CHN,EUR,FRA,JAP,THAI	
4	45110461A	TENSIONER ROLLER PIN	4	29/06/2012		MOD:MS1200-A;XST:AUS,CHN,EUR,FRA,JAP,THAI	
5	73740251A	TIMING DRIVE TOOTHED BELT	2	16/05/2011		MOD:MS1200-A;XST:AUS,CHN,EUR,FRA,JAP,THAI	
6	77113801A	SCREW	13	16/05/2011		MOD:MS1200-A;XST:AUS,CHN,EUR,FRA,JAP,THAI	
7	74940081A	NUT M8	4	16/05/2011		MOD:MS1200-A;XST:AUS,CHN,EUR,FRA,JAP,THAI	
8	85310021A	SPRING WASHER 8 MM	4	01/01/2012		MOD:MS1200-A;XST:AUS,CHN,EUR,FRA,JAP,THAI	
9	45120272A	TENSIONER TIMING BELT FIXED	2	16/05/2011		MOD:MS1200-A;XST:AUS,CHN,EUR,FRA,JAP,THAI	
10	45120291A	COMPLETE MOVABLE TENSIONER ROLLER	2	16/05/2011		MOD:MS1200-A;XST:AUS,CHN,EUR,FRA,JAP,THAI	
11	88210031A	SNAP RING	1	16/05/2011		MOD:MS1200-A;XST:AUS,CHN,EUR,FRA,JAP,THAI	
12	70350062A	ELASTIC-STOP RING NUT	1	16/05/2011		MOD:MS1200-A;XST:AUS,CHN,EUR,FRA,JAP,THAI	
13	171Z0031A	TIMING GEARS SET	1	24/09/2012		MOD:MS1200-A;XST:AUS,CHN,EUR,FRA,JAP,THAI	
14	85110131A	WASHER, LOCK	1	16/05/2011		MOD:MS1200-A;XST:AUS,CHN,EUR,FRA,JAP,THAI	
15	75011601A	NUT M14X1X7	1	16/05/2011		MOD:MS1200-A;XST:AUS,CHN,EUR,FRA,JAP,THAI	
16	68010131A	KEY, WOODRUFF 4X5X10	3	16/05/2011		MOD:MS1200-A;XST:AUS,CHN,EUR,FRA,JAP,THAI	
17	71611281A	SPACER	1	16/05/2011		MOD:MS1200-A;XST:AUS,CHN,EUR,FRA,JAP,THAI	

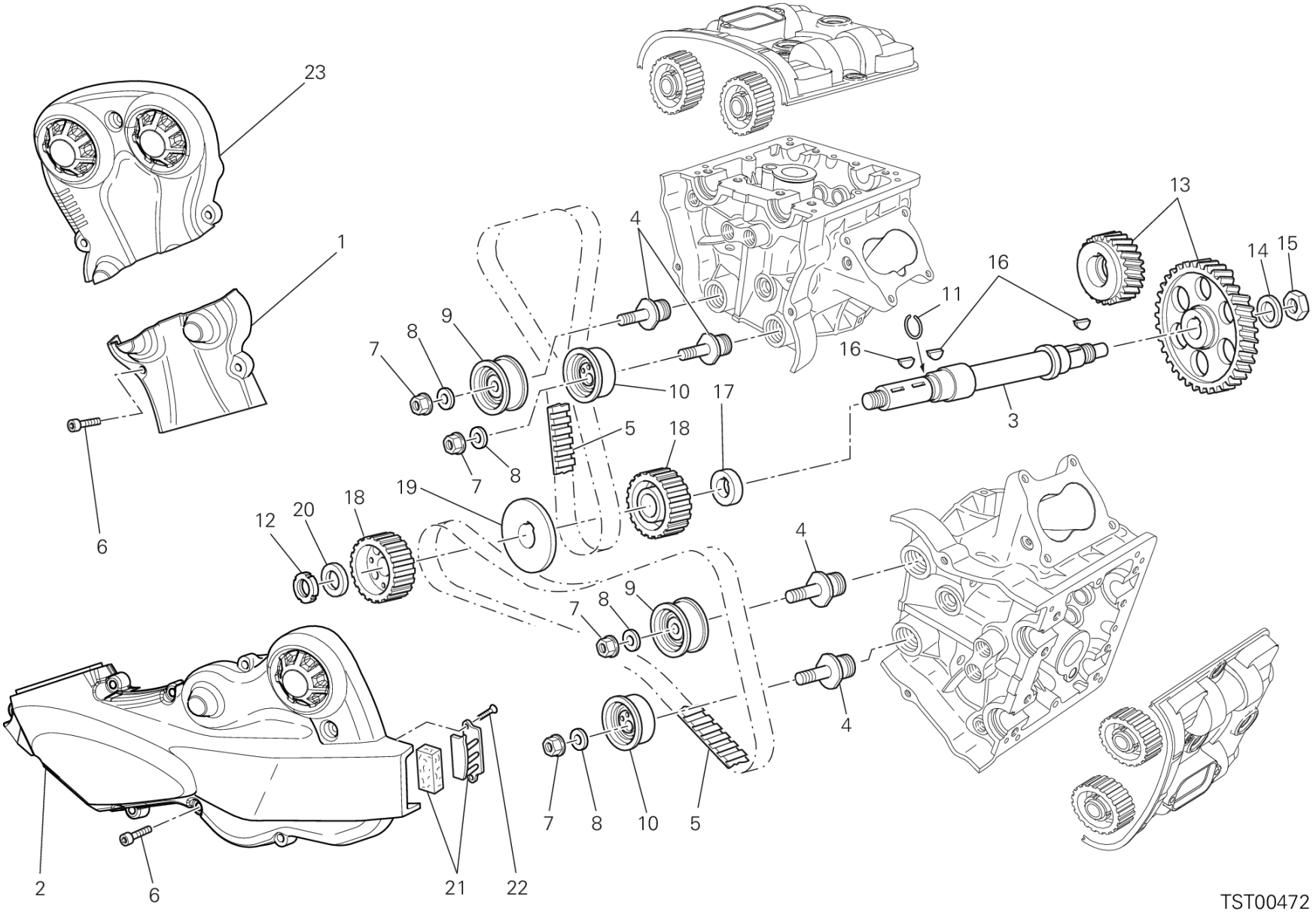
23
1
6
4
9
8
7
10
17
5
18
19
12
20
18
13
14
15
16
11
16
3
4
9
8
7
4
7
8
10
5
2
6
21
22
TST00472

POS.	CODE	DESCRIPTION	QTY	START DATE	END DATE	VALIDITY	NOTES
18	25510104B	PULLEY, TIMING BELT	2	16/05/2011		MOD:MS1200-A;XST:AUS,CHN,EUR,FRA,JAP,THAI	
19	85610622A	WASHER, BELT PULLEY	1	28/09/2011	31/12/2030	MOD:MS1200-A;XST:AUS,CHN,EUR,FRA,JAP,THAI	
20	71610722A	SPACER	1	16/05/2011		MOD:MS1200-A;XST:AUS,CHN,EUR,FRA,JAP,THAI	
21	24521071A	BRACKET, FILTER	1	24/12/2009		MOD:MS1200-A;XST:AUS,CHN,EUR,FRA,JAP,THAI	
22	77250341C	SCREW	2	30/09/2010		MOD:MS1200-A;XST:AUS,CHN,EUR,FRA,JAP,THAI	
23	24511271A	VERTICAL BELT OUTER COVER UPPER	1	16/05/2011		MOD:MS1200-A;XST:AUS,CHN,EUR,FRA,JAP,THAI	

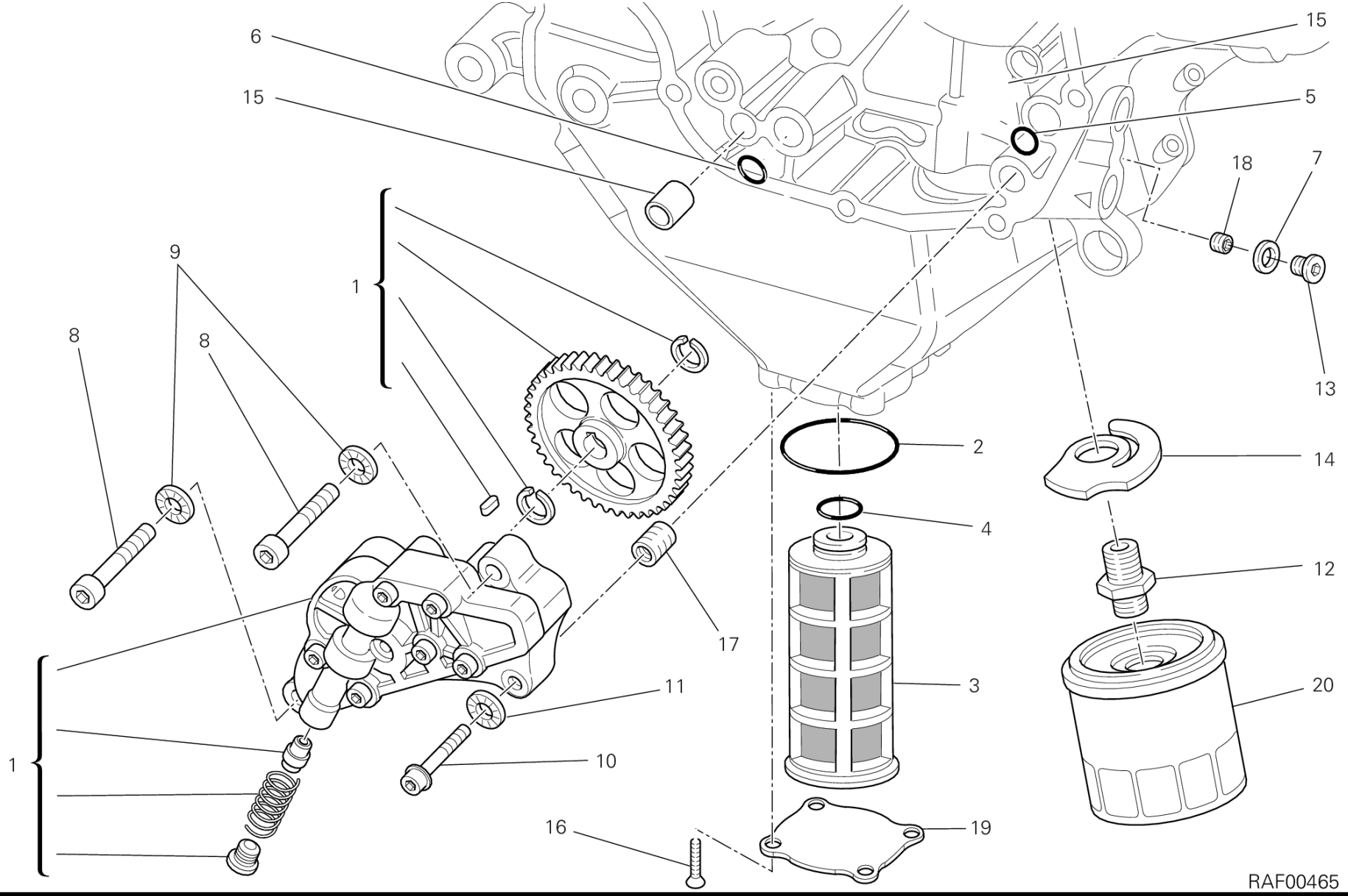
6
15
15
5
18
7
13
1
9
8
8
2
14
4
12
17
3
20
11
1
10
16
19
RAF00465

POS.	CODE	DESCRIPTION	QTY	START DATE	END DATE	VALIDITY	NOTES
1	174Z0021A	OIL PUMP	1	16/05/2011		MOD:MS1200-A;XST:AUS,CHN,EUR,FRA,JAP,THAI	
2	88641581A	O-RING	1	12/03/2012		MOD:MS1200-A;XST:AUS,CHN,EUR,FRA,JAP,THAI	
3	89410241A	OIL NET FILTER	1	16/05/2011		MOD:MS1200-A;XST:AUS,CHN,EUR,FRA,JAP,THAI	
4	88640331A	O-RING 17.96X2.62	1	16/05/2011		MOD:MS1200-A;XST:AUS,CHN,EUR,FRA,JAP,THAI	
5	88641321A	O-RING 11.11X1.78	1	25/09/2012		MOD:MS1200-A;XST:AUS,CHN,EUR,FRA,JAP,THAI	
6	88640371A	O-RING 14X1.78	1	16/05/2011		MOD:MS1200-A;XST:AUS,CHN,EUR,FRA,JAP,THAI	
7	85211951A	GASKET 10.5X17X2	1	12/03/2012		MOD:MS1200-A;XST:AUS,CHN,EUR,FRA,JAP,THAI	
8	77151298B	SCREW TCEI M8X40	2	16/05/2011		MOD:MS1200-A;XST:AUS,CHN,EUR,FRA,JAP,THAI	
9	85310021A	SPRING WASHER 8 MM	2	01/01/2012		MOD:MS1200-A;XST:AUS,CHN,EUR,FRA,JAP,THAI	
10	77140697C	SCREW TCEIF M6X25	1	16/05/2011		MOD:MS1200-A;XST:AUS,CHN,EUR,FRA,JAP,THAI	
11	85310041A	SPRING WASHER 6 MM	1	01/01/2012		MOD:MS1200-A;XST:AUS,CHN,EUR,FRA,JAP,THAI	
12	81510281A	BOLT UNION	1	12/03/2012		MOD:MS1200-A;XST:AUS,CHN,EUR,FRA,JAP,THAI	
13	77911622A	SCREW TCEI M10X1.5X16	1	12/03/2012		MOD:MS1200-A;XST:AUS,CHN,EUR,FRA,JAP,THAI	
14	79920772A	BYPASS SPRING	1	12/03/2012		MOD:MS1200-A;XST:AUS,CHN,EUR,FRA,JAP,THAI	
15	075949280	LOCATING DOWEL	2	16/05/2011		MOD:MS1200-A;XST:AUS,CHN,EUR,FRA,JAP,THAI	
16	77710021B	SCREW TSPEI M6X16 UNI 5933	4	16/05/2011		MOD:MS1200-A;XST:AUS,CHN,EUR,FRA,JAP,THAI	
17	067049310	BUSH	1	12/03/2012		MOD:MS1200-A;XST:AUS,CHN,EUR,FRA,JAP,THAI	

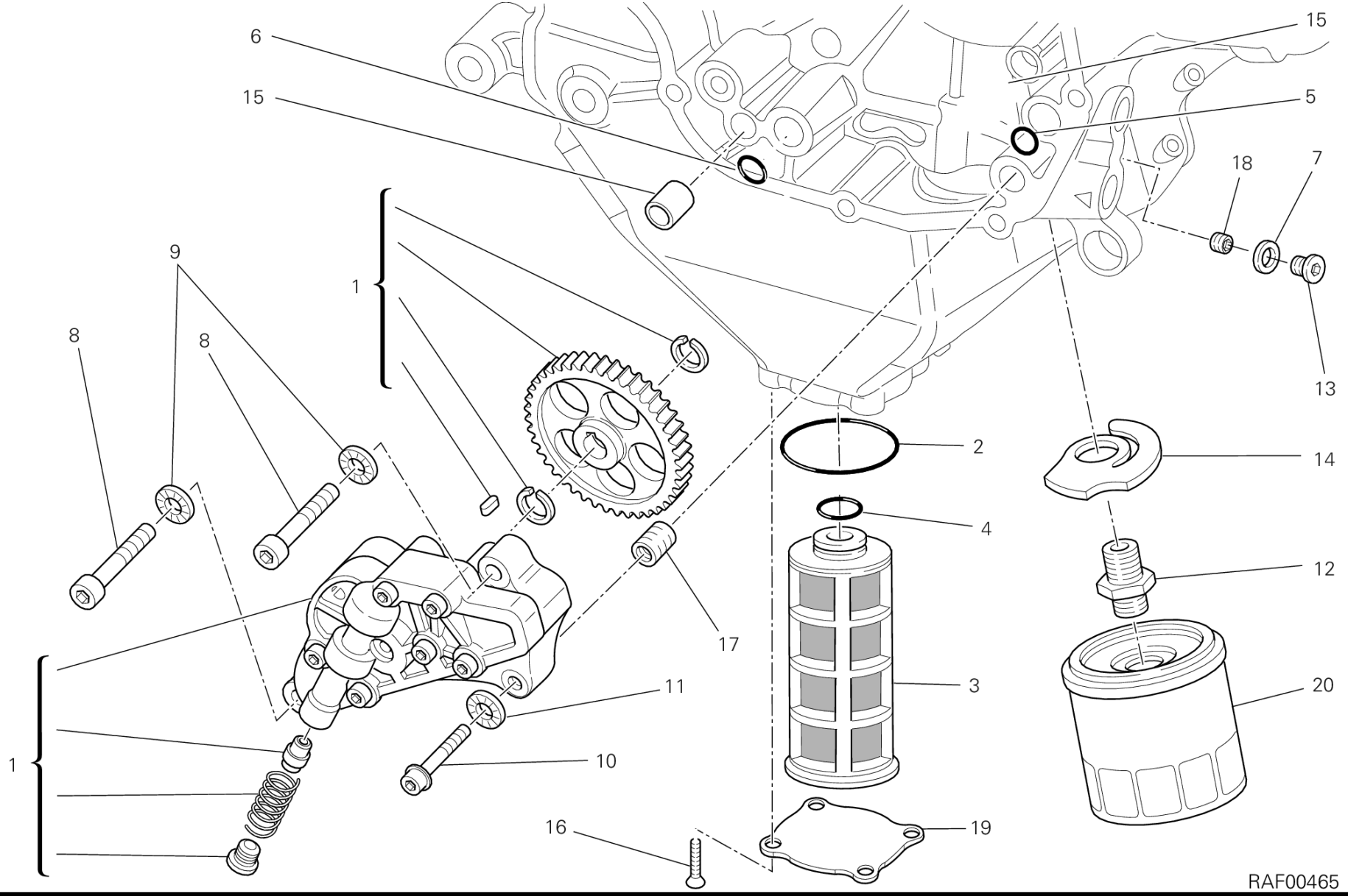
6
15
15
5
18
7
13
1
9
8
8
2
14
4
12
17
3
20
11
1
10
16
19
RAF00465

POS.	CODE	DESCRIPTION	QTY	START DATE	END DATE	VALIDITY	NOTES
18	77840041A	THREADED DOWEL M10X1	1	12/03/2012		MOD:MS1200-A;XST:AUS,CHN,EUR,FRA,JAP,THAI	
19	24713511B	COVER	1	16/05/2011		MOD:MS1200-A;XST:AUS,CHN,EUR,FRA,JAP,THAI	
20	44440035A	FILTER, OIL	1	16/05/2011		MOD:MS1200-A;XST:AUS,CHN,EUR,FRA,JAP,THAI	

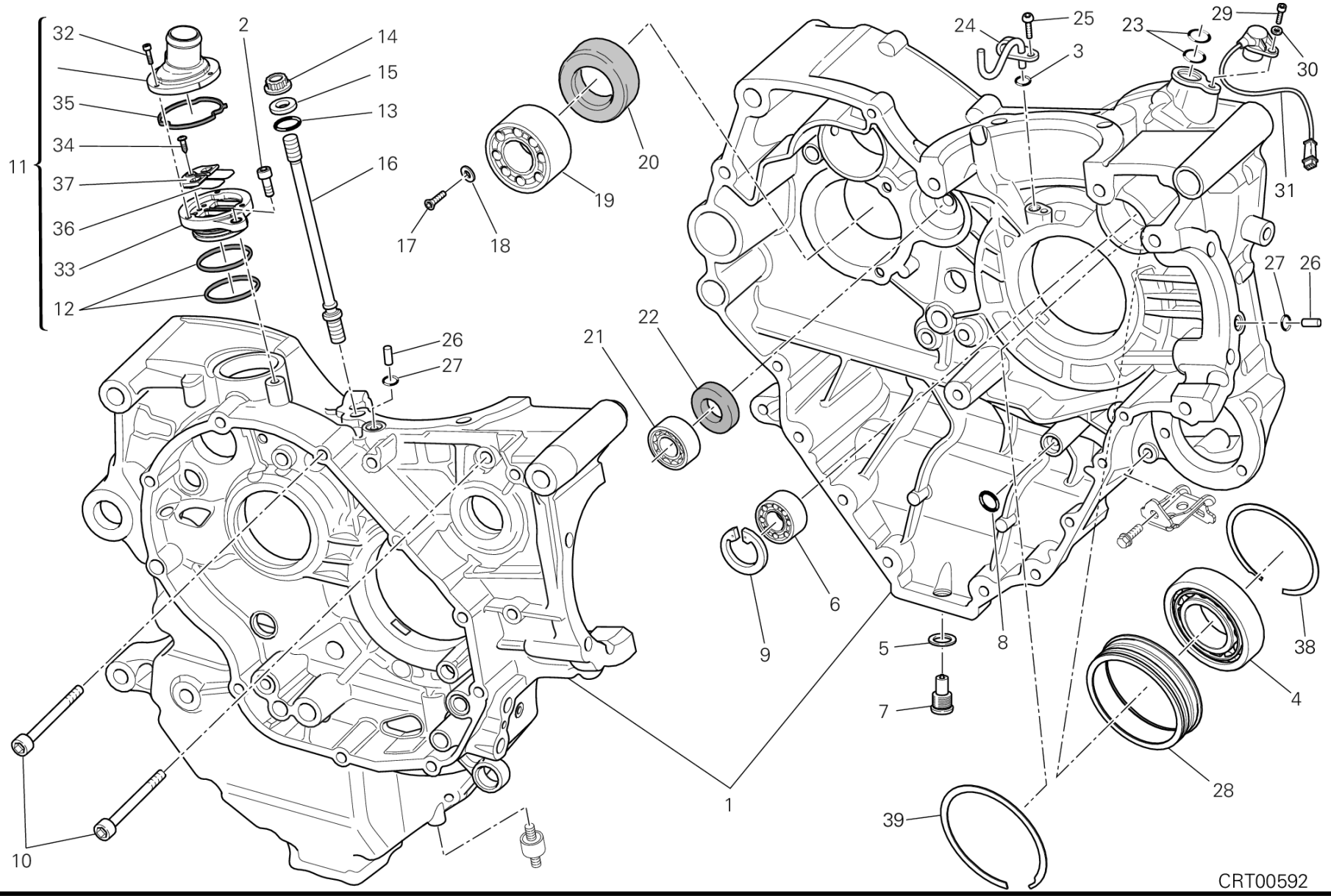
32
35
34
37
36
33
12
11
2
14
15
13
16
17
18
19
20
26
27
21
22
24
25
3
23
29
30
31
27
26
6
9
5
7
8
38
4
28
39
1
10
CRT00592

POS.	CODE	DESCRIPTION	QTY	START DATE	END DATE	VALIDITY	NOTES
1	22522812A	COMPLETE HALF-CRANKCASES PAIR	1	27/06/2012		MOD:MS1200-A;XST:AUS,CHN,EUR,FRA,JAP,THAI	
2	77150658B	SCREW TCEI M6X16	1	12/03/2012		MOD:MS1200-A;XST:AUS,CHN,EUR,FRA,JAP,THAI	
3	88650131A	O-RING 3.68X1.78	1	12/03/2012		MOD:MS1200-A;XST:AUS,CHN,EUR,FRA,JAP,THAI	
4	70241161A	BEARING	1	12/03/2012		MOD:MS1200-A;XST:AUS,CHN,EUR,FRA,JAP,THAI	
5	85250421A	COPPER GASKET 12.2X18X1.5 MM	1	12/03/2012		MOD:MS1200-A;XST:AUS,CHN,EUR,FRA,JAP,THAI	
6	70250081A	BALL BEARING 6003 TN9 C3	1	12/03/2012		MOD:MS1200-A;XST:AUS,CHN,EUR,FRA,JAP,THAI	
7	89320062A	PLUG, OIL DRAIN	1	12/03/2012		MOD:MS1200-A;XST:AUS,CHN,EUR,FRA,JAP,THAI	
8	88641321A	O-RING 11.11X1.78	1	25/09/2012		MOD:MS1200-A;XST:AUS,CHN,EUR,FRA,JAP,THAI	
9	735033380	CIRCLIP	1	12/03/2012		MOD:MS1200-A;XST:AUS,CHN,EUR,FRA,JAP,THAI	
10	77151398B	SCREW TCEI M8X90	2	28/09/2011		MOD:MS1200-A;XST:AUS,CHN,EUR,FRA,JAP,THAI	
11	59320641D	VALVE, BREATHER	1	12/03/2012		MOD:MS1200-A;XST:AUS,CHN,EUR,FRA,JAP,THAI	
12	46320222A	O-RING	2	29/11/2010		MOD:MS1200-A;XST:AUS,CHN,EUR,FRA,JAP,THAI	
13	88641181A	O-RING	8	28/09/2011		MOD:MS1200-A;XST:AUS,CHN,EUR,FRA,JAP,THAI	
14	74810501A	NUT M10X1.5	8	16/05/2011		MOD:MS1200-A;XST:AUS,CHN,EUR,FRA,JAP,THAI	
15	85610642A	WASHER, SPECIAL 10.5X21X2	8	16/05/2011		MOD:MS1200-A;XST:AUS,CHN,EUR,FRA,JAP,THAI	
16	76610553B	STUD BOLT FASTENING HEAD CYLINDER	8	28/09/2011		MOD:MS1200-A;XST:AUS,CHN,EUR,FRA,JAP,THAI	
17	720941616	SCREW TSPEI M6X12	2	12/03/2012		MOD:MS1200-A;XST:AUS,CHN,EUR,FRA,JAP,THAI	

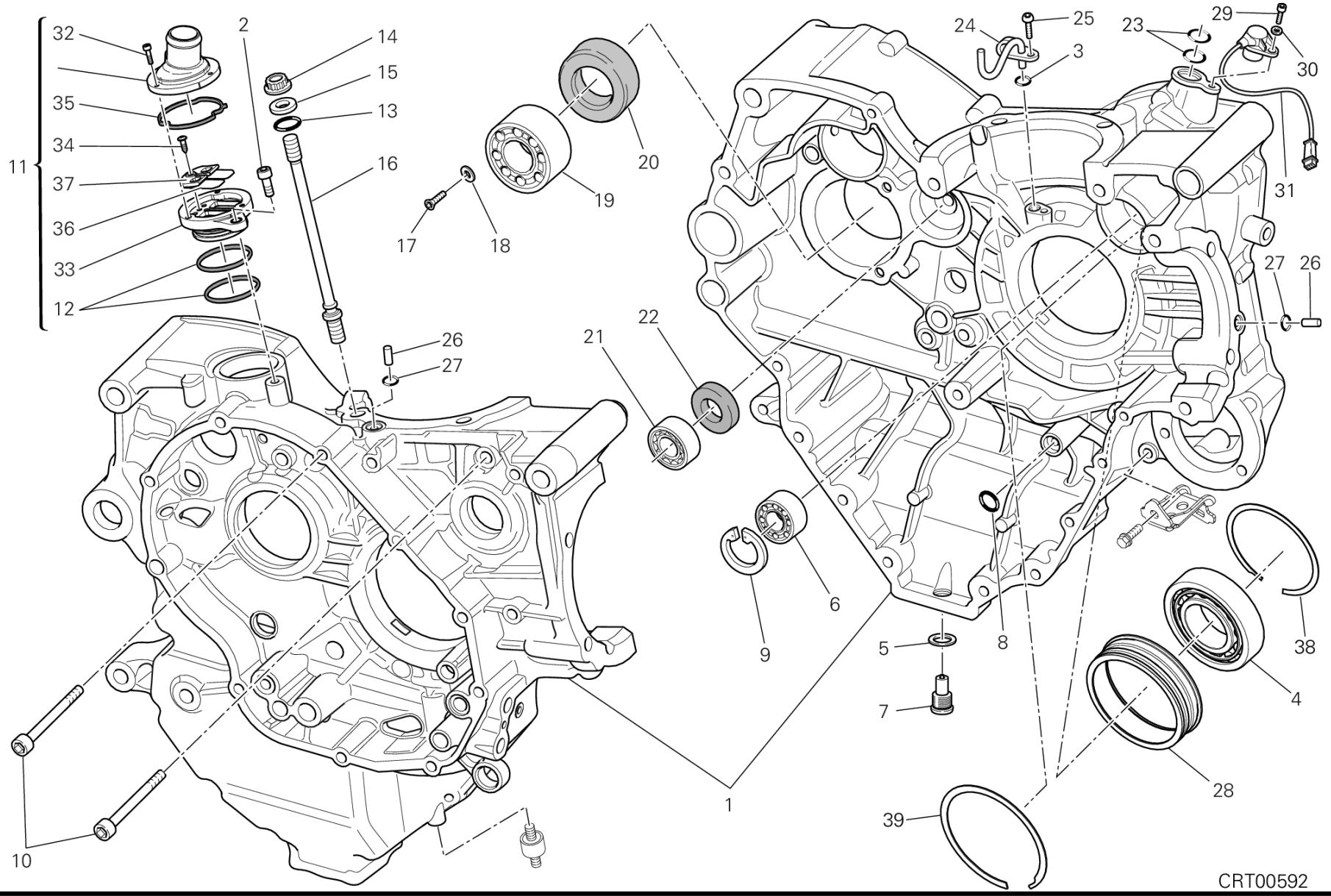
32
2
14
15
13
35
34
16
11
37
36
33
12
17
18
19
20
24
25
3
23
29
30
31
27
26
22
21
26
27
6
9
8
5
7
38
4
28
39
1
10
CRT00592

POS.	CODE	DESCRIPTION	QTY	START DATE	END DATE	VALIDITY	NOTES
18	85611481A	WASHER	2	12/03/2012		MOD:MS1200-A;XST:AUS,CHN,EUR,FRA,JAP,THAI	
19	70240131D	BEARING	1	30/04/2012		MOD:MS1200-A;XST:AUS,CHN,EUR,FRA,JAP,THAI	
20	93040221A	SEAL, OIL 35X52X7	1	12/03/2012		MOD:MS1200-A;XST:AUS,CHN,EUR,FRA,JAP,THAI	
21	70240331A	BEARING 17X40X12	2	12/03/2012		MOD:MS1200-A;XST:AUS,CHN,EUR,FRA,JAP,THAI	
22	93040931A	SEAL, OIL 17X25X4	1	12/03/2012		MOD:MS1200-A;XST:AUS,CHN,EUR,FRA,JAP,THAI	
23	88640331A	O-RING 17.96X2.62	2	12/03/2012		MOD:MS1200-A;XST:AUS,CHN,EUR,FRA,JAP,THAI	
24	87511461B	JET	1	12/03/2012		MOD:MS1200-A;XST:AUS,CHN,EUR,FRA,JAP,THAI	
25	77510311B	SCREW TBEI M5X10	1	12/03/2012		MOD:MS1200-A;XST:AUS,CHN,EUR,FRA,JAP,THAI	
26	86010051B	DOWEL	2	28/09/2011		MOD:MS1200-A;XST:AUS,CHN,EUR,FRA,JAP,THAI	
27	88610241A	O-RING 5.23X2.62	2	02/03/2012		MOD:MS1200-A;XST:AUS,CHN,EUR,FRA,JAP,THAI	
28	710Z0031A	BUSHING	1	12/03/2012		MOD:MS1200-A;XST:AUS,CHN,EUR,FRA,JAP,THAI	
29	77550211A	SCREW TBEI M6X16	1	28/09/2011		MOD:MS1200-A;XST:AUS,CHN,EUR,FRA,JAP,THAI	
30	85310031A	SPRING WASHER 6 MM	1	28/09/2011		MOD:MS1200-A;XST:AUS,CHN,EUR,FRA,JAP,THAI	
31	55241321B	SENSOR, TIMING & RPM	1	28/09/2011		MOD:MS1200-A;XST:AUS,CHN,EUR,FRA,JAP,THAI	
32	77150068B	SCREW	3	29/11/2010		MOD:MS1200-A;XST:AUS,CHN,EUR,FRA,JAP,THAI	
33	59310601B	HOLDER READ VALVE	1	29/11/2010		MOD:MS1200-A;XST:AUS,CHN,EUR,FRA,JAP,THAI	
34	77250341B	SCREW, TAPPING 3.5X12	1	29/11/2010		MOD:MS1200-A;XST:AUS,CHN,EUR,FRA,JAP,THAI	

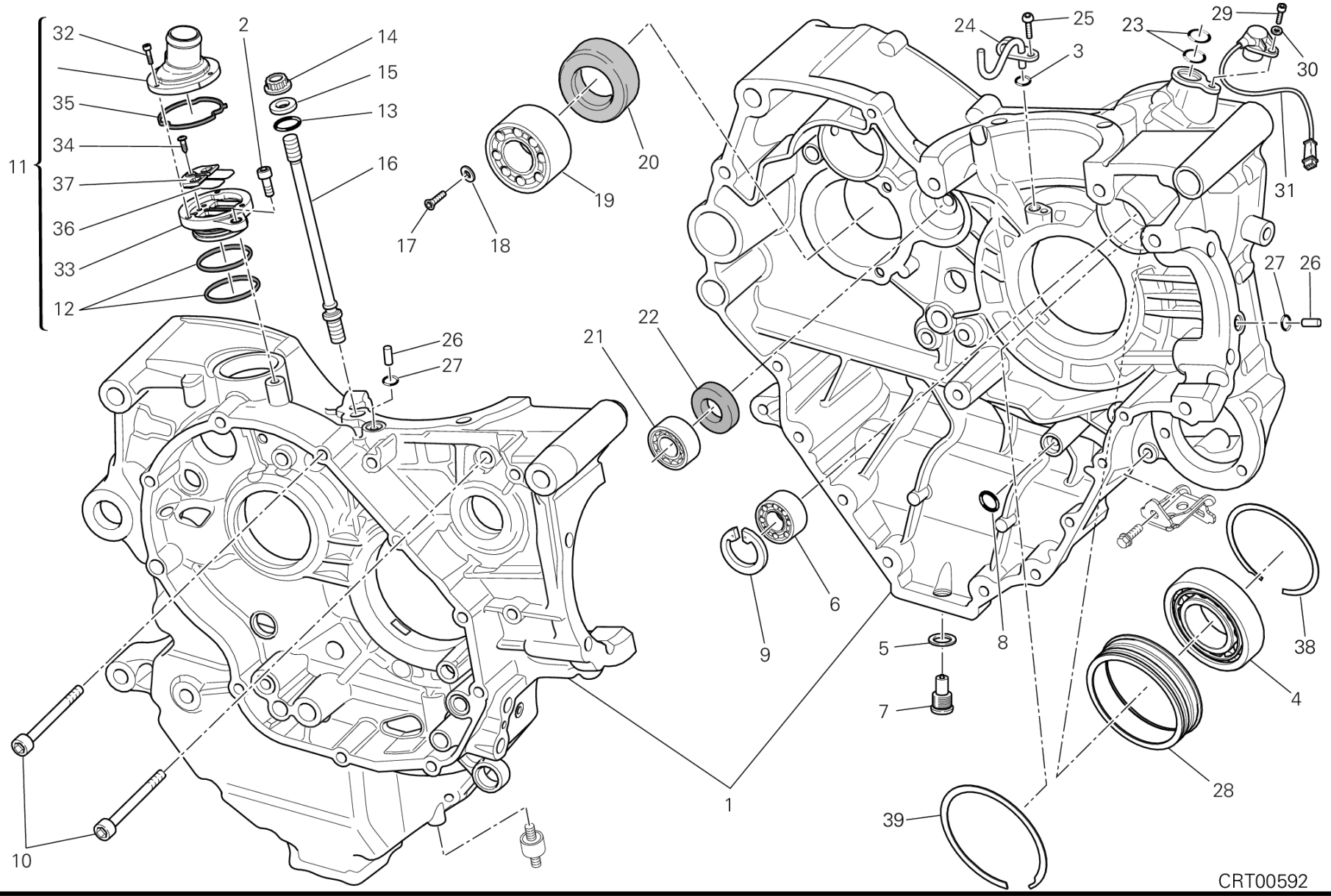
32
35
34
37
36
33
12
11
2
14
15
13
16
17
18
19
20
26
27
21
22
24
25
3
23
29
30
31
27
26
6
9
5
7
8
38
4
28
39
1
10
CRT00592

POS.	CODE	DESCRIPTION	QTY	START DATE	END DATE	VALIDITY	NOTES
35	78811151A	GASKET	1	29/11/2010		MOD:MS1200-A;XST:AUS,CHN,EUR,FRA,JAP,THAI	
36	81110021A	REED VALVE ASSY	1	29/11/2010		MOD:MS1200-A;XST:AUS,CHN,EUR,FRA,JAP,THAI	
37	82716031A	SPACER	1	29/11/2010		MOD:MS1200-A;XST:AUS,CHN,EUR,FRA,JAP,THAI	
38	88440651A	SPRING RING	1	12/03/2012		MOD:MS1200-A;XST:AUS,CHN,EUR,FRA,JAP,THAI	
39	88440641A	SPRING RING	1	12/03/2012		MOD:MS1200-A;XST:AUS,CHN,EUR,FRA,JAP,THAI	

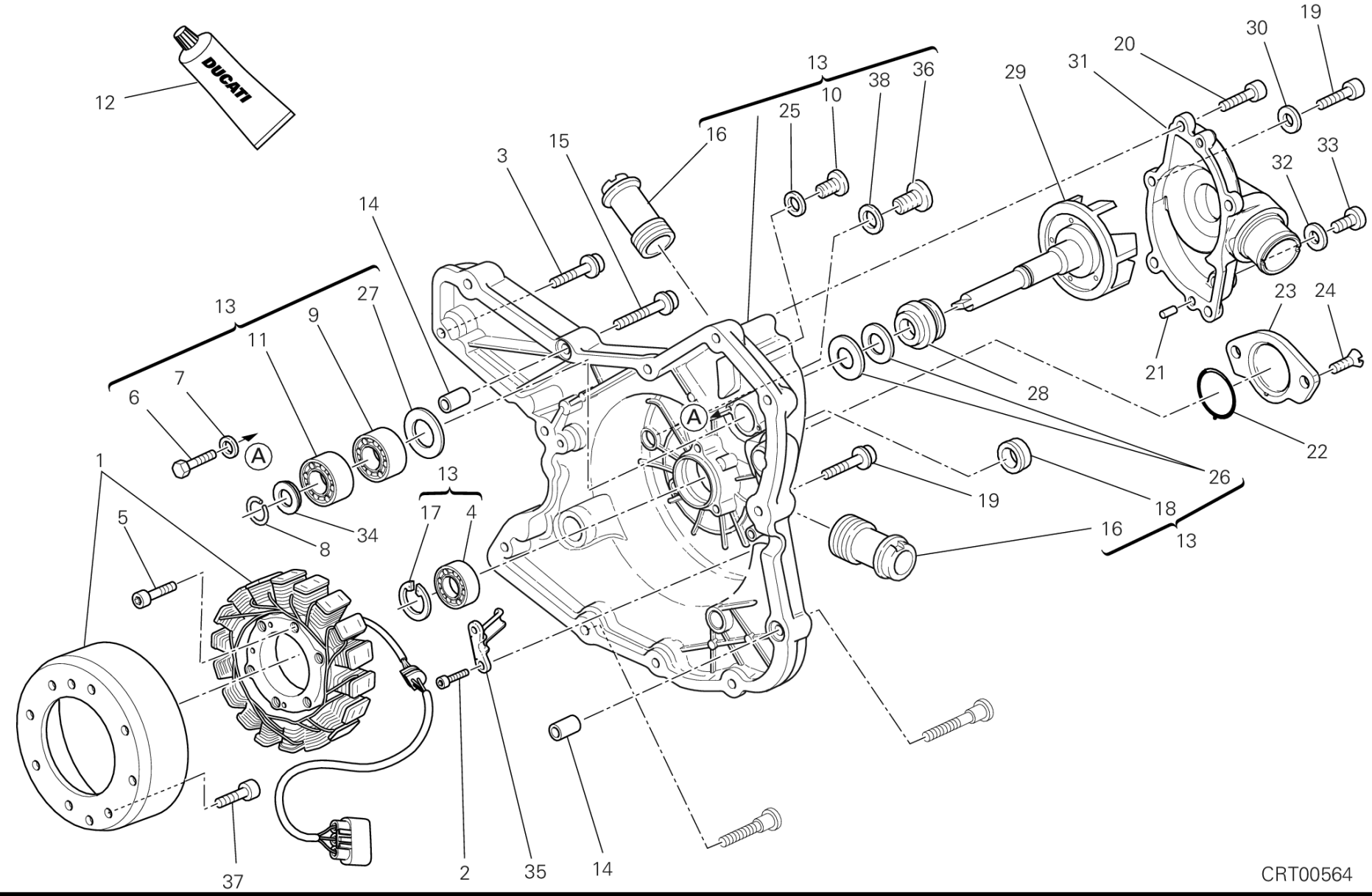
12
DUCATI
13
16
25
10
38
36
29
31
20
30
19
3
15
14
32
33
27
9
11
7
6
A
23
24
21
28
22
26
19
18
16
13
1
5
8
34
17
4
37
2
35
14
CRT00564

DRAWING 011 - GENERATOR COVER [MOD:MS1200-A;XST:AUS,CHN,EUR,FRA,JAP,THAI]

GROUP ENGINE

POS.	CODE	DESCRIPTION	QTY	START DATE	END DATE	VALIDITY	NOTES
1	26420131A	FLYWHEEL	1	09/03/2012		MOD:MS1200-A;XST:AUS,CHN,EUR,FRA,JAP,THAI	
2	77150408B	SCREW TCEI M5X14	2	01/05/2010		MOD:MS1200-A;XST:AUS,CHN,EUR,FRA,JAP,THAI	
3	77140673C	SCREW	2	28/09/2011		MOD:MS1200-A;XST:AUS,CHN,EUR,FRA,JAP,THAI	
4	70250081A	BALL BEARING 6003 TN9 C3	1	01/05/2010		MOD:MS1200-A;XST:AUS,CHN,EUR,FRA,JAP,THAI	
5	77110518B	SCREW TCEI M6X25	3			MOD:MS1200-A;XST:AUS,CHN,EUR,FRA,JAP,THAI	
6	77052508B	SCREW TE M6X16	2	01/05/2010		MOD:MS1200-A;XST:AUS,CHN,EUR,FRA,JAP,THAI	
7	85211721A	WASHER 6X14.2X1.3	2	01/05/2010		MOD:MS1200-A;XST:AUS,CHN,EUR,FRA,JAP,THAI	
8	88450111A	CIRCLIP	1	01/05/2010		MOD:MS1200-A;XST:AUS,CHN,EUR,FRA,JAP,THAI	
9	70240102A	BEARING	1	01/05/2010		MOD:MS1200-A;XST:AUS,CHN,EUR,FRA,JAP,THAI	
10	77910262A	SCREW M12X1	1	01/05/2010		MOD:MS1200-A;XST:AUS,CHN,EUR,FRA,JAP,THAI	
11	70240091A	BALL BEARING 6000	1	01/05/2010		MOD:MS1200-A;XST:AUS,CHN,EUR,FRA,JAP,THAI	
12	942470014	LIQUID GASKET	0.016	28/09/2011		MOD:MS1200-A;XST:AUS,CHN,EUR,FRA,JAP,THAI	
13	24221092AC	GENERATOR COVER BLACK	1	28/09/2011		MOD:MS1200-A;XST:AUS,CHN,EUR,FRA,JAP,THAI	
14	71111601A	PIN DOWEL	2	16/05/2011		MOD:MS1200-A;XST:AUS,CHN,EUR,FRA,JAP,THAI	
15	77140713C	SCREW TCEIF M6X30 10.9	1	28/09/2011		MOD:MS1200-A;XST:AUS,CHN,EUR,FRA,JAP,THAI	
16	66810014A	WATER PUMP DELIVERY PIPE UNION	2	01/05/2010		MOD:MS1200-A;XST:AUS,CHN,EUR,FRA,JAP,THAI	
17	735033380	CIRCLIP	1	01/05/2010		MOD:MS1200-A;XST:AUS,CHN,EUR,FRA,JAP,THAI	

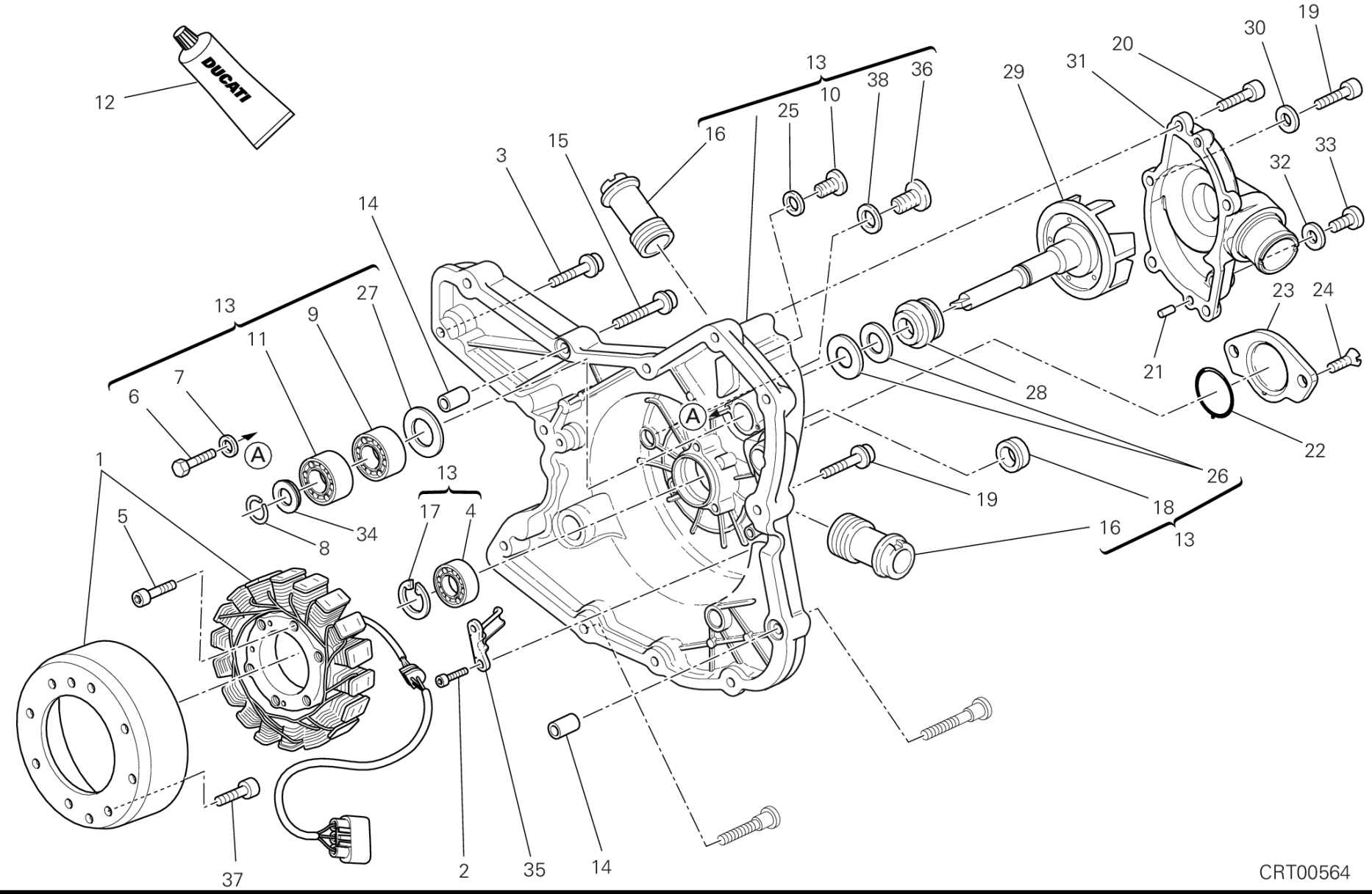
12
DUCATI
13
16
25
10
38
36
29
31
20
30
19
33
32
3
15
14
27
9
11
7
6
A
1
5
8
34
17
4
23
24
21
28
22
26
18
19
16
37
2
35
14
CRT00564

POS.	CODE	DESCRIPTION	QTY	START DATE	END DATE	VALIDITY	NOTES
18	937831524	SEAL, OIL 15X24X6	1	01/05/2010		MOD:MS1200-A;XST:AUS,CHN,EUR,FRA,JAP,THAI	
19	77140693C	SCREW	8	28/09/2011		MOD:MS1200-A;XST:AUS,CHN,EUR,FRA,JAP,THAI	
20	77150663B	SCREW	4	01/05/2010		MOD:MS1200-A;XST:AUS,CHN,EUR,FRA,JAP,THAI	
21	86010041A	PIN DOWEL	2	01/05/2010		MOD:MS1200-A;XST:AUS,CHN,EUR,FRA,JAP,THAI	
22	88610951A	O-RING 32.99X2.62	1	28/09/2011		MOD:MS1200-A;XST:AUS,CHN,EUR,FRA,JAP,THAI	
23	24713051AF	COVER, SENSOR	1	28/09/2011		MOD:MS1200-A;XST:AUS,CHN,EUR,FRA,JAP,THAI	
24	77750493C	SCREW	2	28/09/2011		MOD:MS1200-A;XST:AUS,CHN,EUR,FRA,JAP,THAI	
25	85250261A	GASKET, ALUMINIUM 12X16X1.5	1	01/05/2010		MOD:MS1200-A;XST:AUS,CHN,EUR,FRA,JAP,THAI	
26	93050051A	MECHANICAL SEAL	1	01/05/2010		MOD:MS1200-A;XST:AUS,CHN,EUR,FRA,JAP,THAI	
27	71311281B	SPACER	1	01/05/2010		MOD:MS1200-A;XST:AUS,CHN,EUR,FRA,JAP,THAI	
28	93050062B	MECHANICAL SEAL	1	01/05/2010		MOD:MS1200-A;XST:AUS,CHN,EUR,FRA,JAP,THAI	
29	25120121A	WATER PUMP ROTOR	1	01/05/2010		MOD:MS1200-A;XST:AUS,CHN,EUR,FRA,JAP,THAI	
30	85250231A	GASKET	1	01/05/2010		MOD:MS1200-A;XST:AUS,CHN,EUR,FRA,JAP,THAI	
31	24721301AC	WATER PUMP COVER ASSY	1	28/09/2011		MOD:MS1200-A;XST:AUS,CHN,EUR,FRA,JAP,THAI	
32	85250241A	WASHER 10X14X1	1	01/01/2011		MOD:MS1200-A;XST:AUS,CHN,EUR,FRA,JAP,THAI	
33	78050012A	PLUG, THREADED M10X1	1	01/01/2011		MOD:MS1200-A;XST:AUS,CHN,EUR,FRA,JAP,THAI	
34	85211141A	WASHER 10X17X1.8	1	01/05/2010		MOD:MS1200-A;XST:AUS,CHN,EUR,FRA,JAP,THAI	

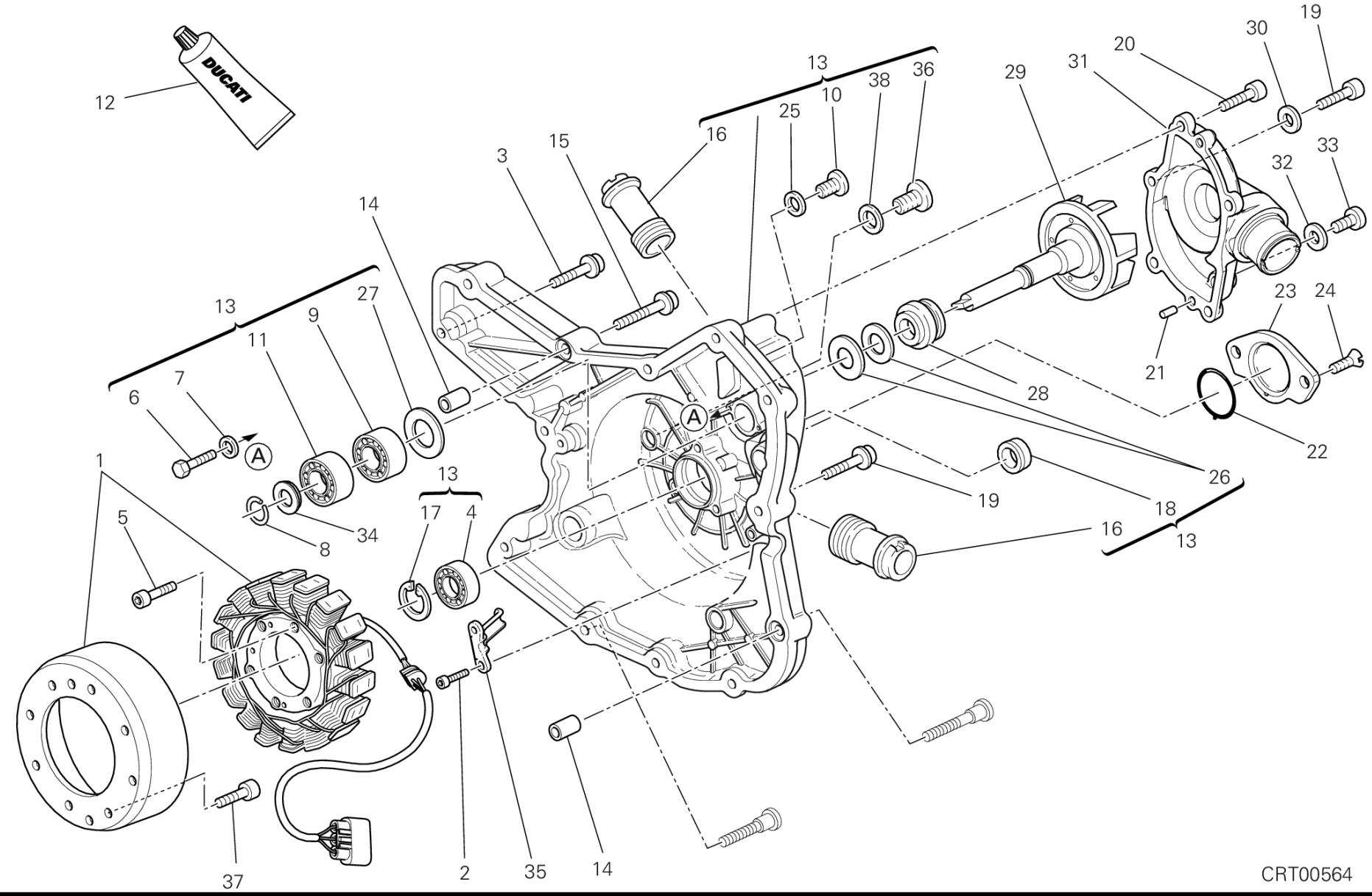
12
DUCATI
13
16
25
10
38
36
29
31
20
30
19
3
15
14
32
33
27
9
11
7
6
A
23
24
21
28
22
26
19
18
16
13
1
5
34
8
17
4
37
2
35
14
CRT00564

DRAWING 011 - GENERATOR COVER [MOD:MS1200-A;XST:AUS,CHN,EUR,FRA,JAP,THAI]

GROUP ENGINE

POS.	CODE	DESCRIPTION	QTY	START DATE	END DATE	VALIDITY	NOTES
35	83011441A	BRACKET	1	01/05/2010		MOD:MS1200-A;XST:AUS,CHN,EUR,FRA,JAP,THAI	
36	77911982A	THREADED PLUG M15X1	1	01/05/2010		MOD:MS1200-A;XST:AUS,CHN,EUR,FRA,JAP,THAI	
37	77113931A	SCREW	8	28/09/2011		MOD:MS1200-A;XST:AUS,CHN,EUR,FRA,JAP,THAI	
38	85211201A	ALUMINIUM GASKET	1	01/05/2010		MOD:MS1200-A;XST:AUS,CHN,EUR,FRA,JAP,THAI	

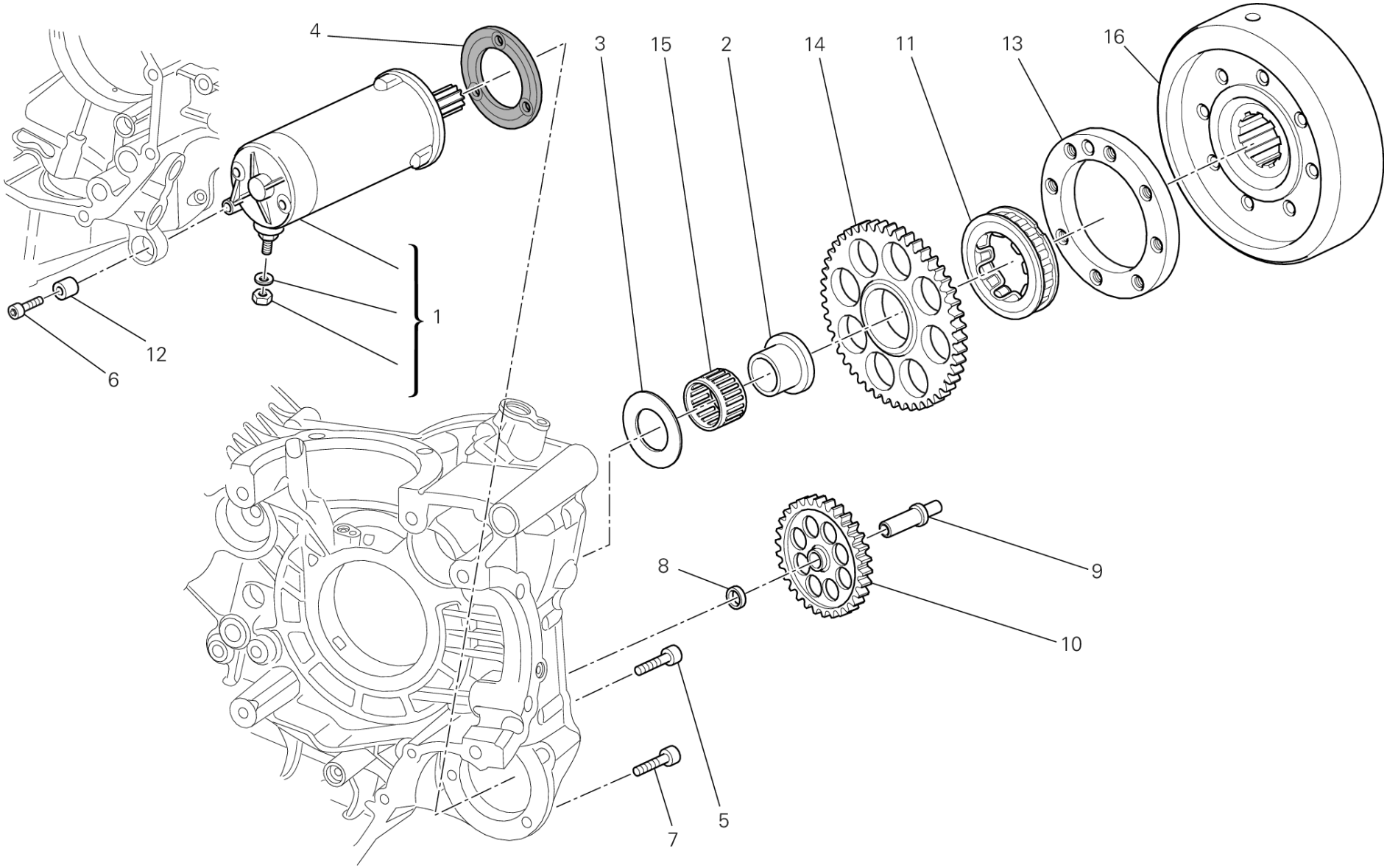

IMP00810

POS.	CODE	DESCRIPTION	QTY	START DATE	END DATE	VALIDITY	NOTES
1	27040104A	STARTING MOTOR	1	12/09/2012		MOD:MS1200-A;XST:AUS,CHN,EUR,FRA,JAP,THAI	
2	88110341A	BUSH	1	24/09/2012		MOD:MS1200-A;XST:AUS,CHN,EUR,FRA,JAP,THAI	
3	85610751A	WASHER, THRUST	1	28/09/2011		MOD:MS1200-A;XST:AUS,CHN,EUR,FRA,JAP,THAI	
4	78810542A	ENGINE STARTER GASKET	1	28/09/2011		MOD:MS1200-A;XST:AUS,CHN,EUR,FRA,JAP,THAI	
5	77113831A	SCREW	2	28/09/2011		MOD:MS1200-A;XST:AUS,CHN,EUR,FRA,JAP,THAI	
6	77110521A	SCREW TCEI M6X30	1	28/09/2011		MOD:MS1200-A;XST:AUS,CHN,EUR,FRA,JAP,THAI	
7	77110518B	SCREW TCEI M6X25	1	16/05/2011		MOD:MS1200-A;XST:AUS,CHN,EUR,FRA,JAP,THAI	
8	71319191A	SPACER	1	28/09/2011		MOD:MS1200-A;XST:AUS,CHN,EUR,FRA,JAP,THAI	
9	82113471A	STARTER REDUCTION SHAFT	1	28/09/2011		MOD:MS1200-A;XST:AUS,CHN,EUR,FRA,JAP,THAI	
10	176Z0021A	IDLE GEAR T74/13	1	28/09/2011		MOD:MS1200-A;XST:AUS,CHN,EUR,FRA,JAP,THAI	
11	70140351A	CLUTCH, ONE WAY	1	28/09/2011		MOD:MS1200-A;XST:AUS,CHN,EUR,FRA,JAP,THAI	
12	70010361A	DAMPER	1	12/03/2012		MOD:MS1200-A;XST:AUS,CHN,EUR,FRA,JAP,THAI	
13	160Z0011A	FLANGE STARTING CLUTCH	1	16/05/2011		MOD:MS1200-A;XST:AUS,CHN,EUR,FRA,JAP,THAI	
14	173Z0021A	ELECTRIC STARTER DRIVEN GEAR	1	28/09/2011		MOD:MS1200-A;XST:AUS,CHN,EUR,FRA,JAP,THAI	
15	70240181A	BEARING, NEEDLE	1	28/09/2011		MOD:MS1200-A;XST:AUS,CHN,EUR,FRA,JAP,THAI	
16	27610541A	IGNITION FLYWHEEL	1	24/09/2012		MOD:MS1200-A;XST:AUS,CHN,EUR,FRA,JAP,THAI	

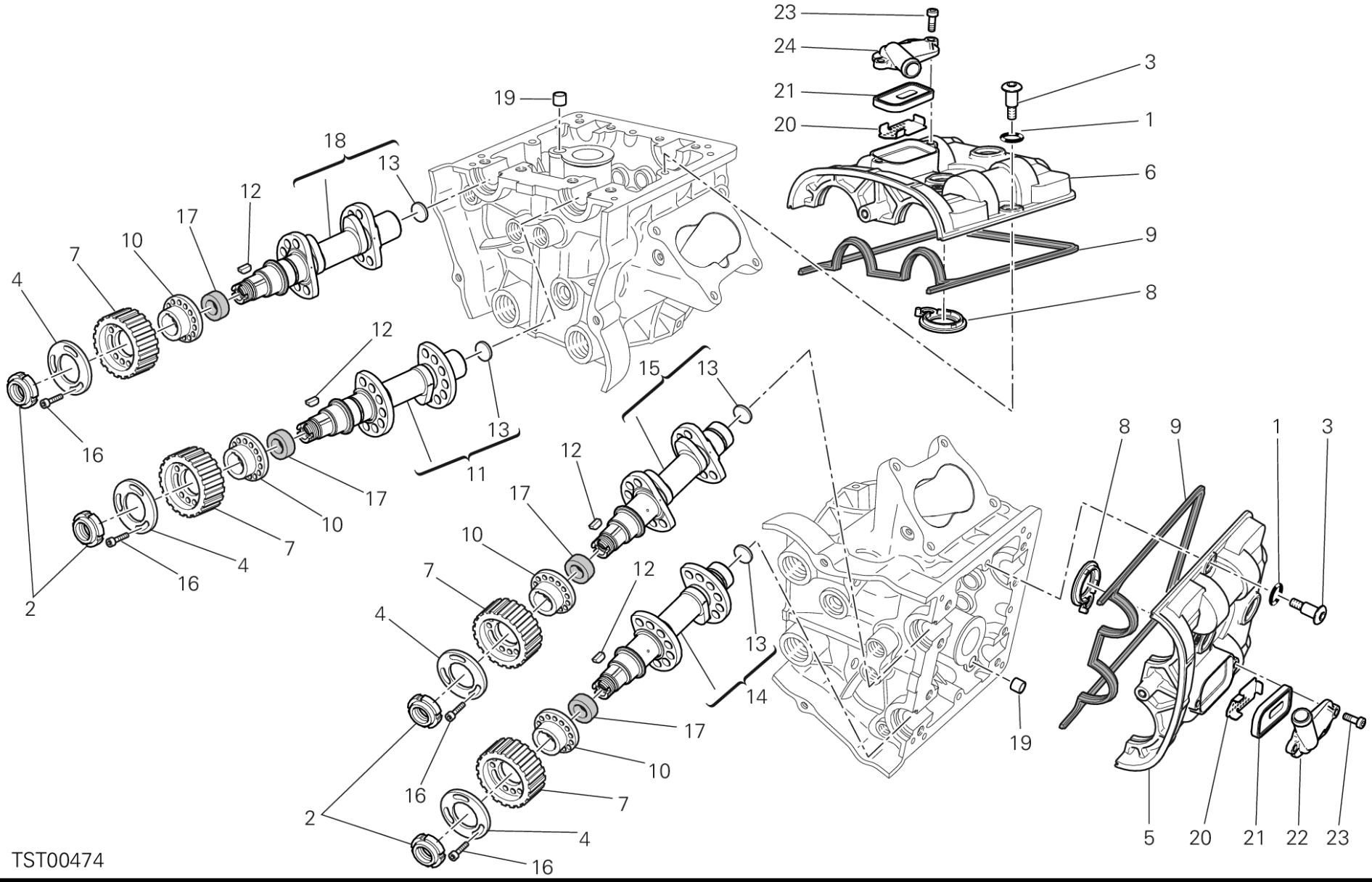
TST00474

POS.	CODE	DESCRIPTION	QTY	START DATE	END DATE	VALIDITY	NOTES
1	88650511A	O-RING 12.39X3.53	8	29/06/2012		MOD:MS1200-A;XST:AUS,CHN,EUR,FRA,JAP,THAI	
2	70350022A	RING NUT M17X1	4	29/06/2012		MOD:MS1200-A;XST:AUS,CHN,EUR,FRA,JAP,THAI	
3	77915093A	SCREW, SPECIAL	8	29/06/2012		MOD:MS1200-A;XST:AUS,CHN,EUR,FRA,JAP,THAI	
4	85610743A	WASHER, SPECIAL	4	29/06/2012		MOD:MS1200-A;XST:AUS,CHN,EUR,FRA,JAP,THAI	
5	24714141A	COVER CYLINDER HEAD, HORIZONTAL	1	29/06/2012		MOD:MS1200-A;XST:AUS,CHN,EUR,FRA,JAP,THAI	
6	24714151A	COVER CYLINDER HEAD, VERTICAL	1	29/06/2012		MOD:MS1200-A;XST:AUS,CHN,EUR,FRA,JAP,THAI	
7	25510193A	TIMING BELT PULLEY, DRIVEN T20	4	29/06/2012		MOD:MS1200-A;XST:AUS,CHN,EUR,FRA,JAP,THAI	
8	78811211A	GASKET	2	29/06/2012		MOD:MS1200-A;XST:AUS,CHN,EUR,FRA,JAP,THAI	
9	78810931A	GASKET CYLINDER HEAD COVER	2	29/06/2012		MOD:MS1200-A;XST:AUS,CHN,EUR,FRA,JAP,THAI	
10	16010941A	SPACER	4	29/06/2012		MOD:MS1200-A;XST:AUS,CHN,EUR,FRA,JAP,THAI	
11	14823431B	VERTICAL INTAKE CAMSHAFT	1	29/06/2012		MOD:MS1200-A;XST:AUS,CHN,EUR,FRA,JAP,THAI	
12	68050061A	WOODRUFF KEY 3X5	4	29/06/2012		MOD:MS1200-A;XST:AUS,CHN,EUR,FRA,JAP,THAI	
13	87310051A	PLUG 18 MM	4	03/04/2012		MOD:MS1200-A;XST:AUS,CHN,EUR,FRA,JAP,THAI	
14	14823441B	HORIZONTAL EXHAUST CAMSHAFT	1	29/06/2012		MOD:MS1200-A;XST:AUS,CHN,EUR,FRA,JAP,THAI	
15	14823421B	HORIZONTAL INTAKE CAMSHAFT	1	29/06/2012		MOD:MS1200-A;XST:AUS,CHN,EUR,FRA,JAP,THAI	
16	77950302A	SCREW TC M6X12	12	29/06/2012		MOD:MS1200-A;XST:AUS,CHN,EUR,FRA,JAP,THAI	
17	93050071A	SEAL, OIL BAVISLRSX7 24-35-7	4	29/06/2012		MOD:MS1200-A;XST:AUS,CHN,EUR,FRA,JAP,THAI	

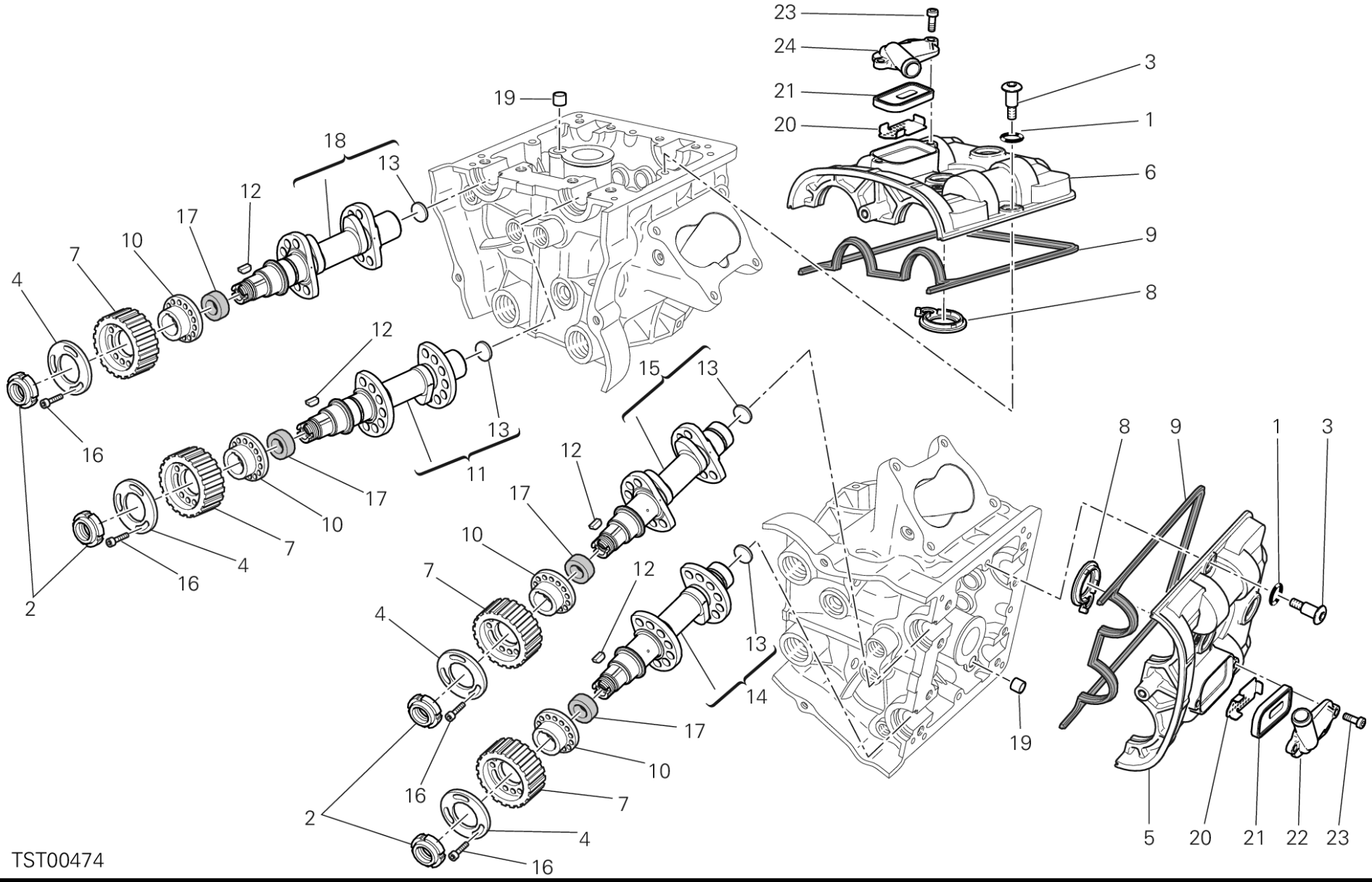

TST00474

POS.	CODE	DESCRIPTION	QTY	START DATE	END DATE	VALIDITY	NOTES
18	14823451B	VERTICAL EXHAUST CAMSHAFT	1	29/06/2012		MOD:MS1200-A;XST:AUS,CHN,EUR,FRA,JAP,THAI	
19	71113741A	BUSH	2	29/06/2012		MOD:MS1200-A;XST:AUS,CHN,EUR,FRA,JAP,THAI	
20	82716351A	PLATE	2	29/06/2012		MOD:MS1200-A;XST:AUS,CHN,EUR,FRA,JAP,THAI	
21	81140012B	VALVE	2	29/06/2012		MOD:MS1200-A;XST:AUS,CHN,EUR,FRA,JAP,THAI	
22	24714161A	COVER	1	29/06/2012		MOD:MS1200-A;XST:AUS,CHN,EUR,FRA,JAP,THAI	
23	77350403B	SCREW	4	29/06/2012		MOD:MS1200-A;XST:AUS,CHN,EUR,FRA,JAP,THAI	
24	24714171A	COVER	1	29/06/2012		MOD:MS1200-A;XST:AUS,CHN,EUR,FRA,JAP,THAI	

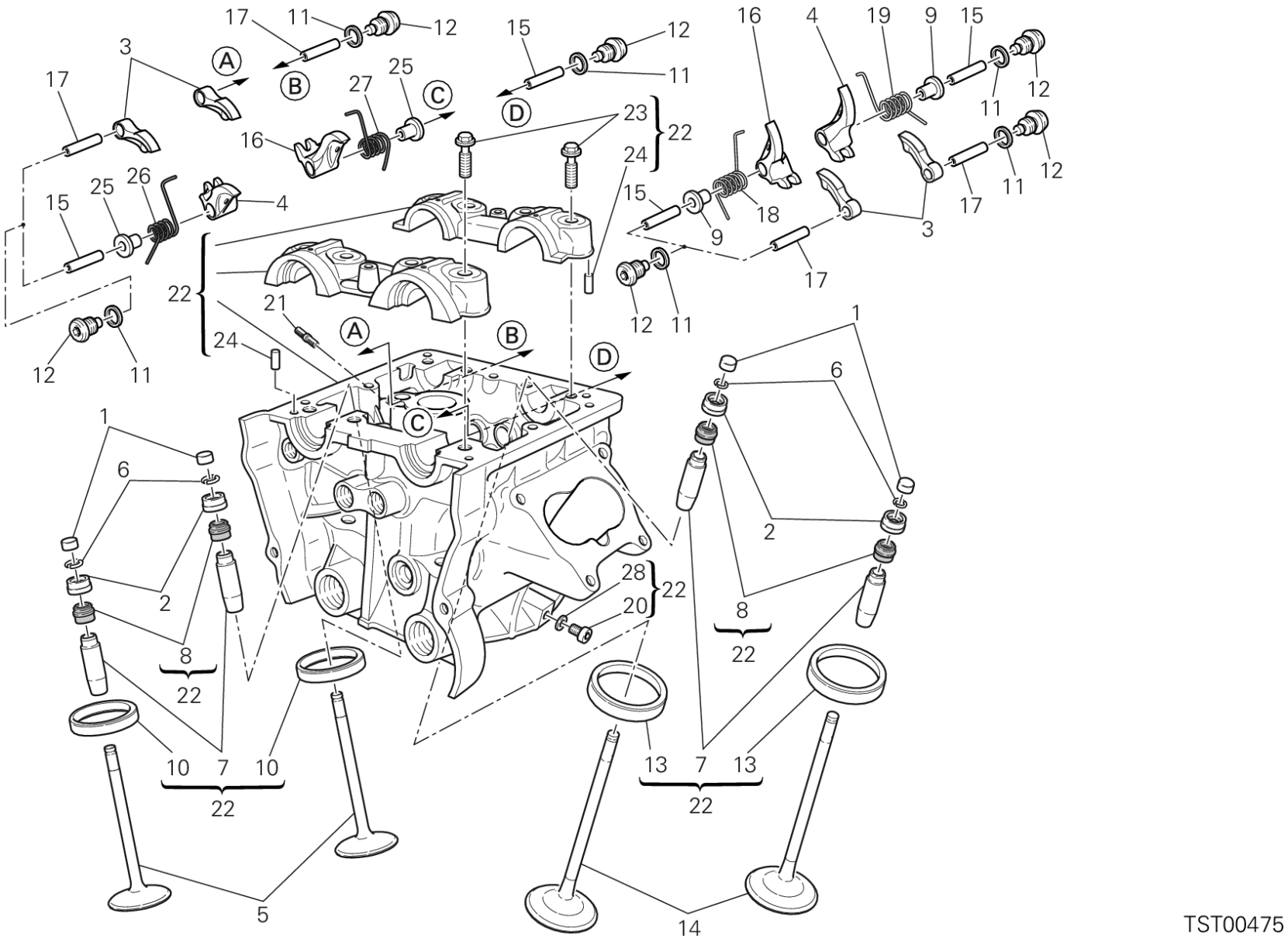
17
11
12
15
12
11
16
4
19
9
15
3
A
B
27
25
C
D
23
22
24
16
11
12
17
11
12
17
25
26
15
4
15
18
9
3
17
22
21
24
12
11
12
11
A
B
D
1
6
C
1
6
2
2
28
22
20
8
22
8
22
10
7
10
22
13
7
13
22
5
14
TST00475

POS.	CODE	DESCRIPTION	QTY	START DATE	END DATE	VALIDITY	NOTES
1	84010011A	ADJUSTER, OPENING ROCKER ARM 2.00 MM	4	24/12/2009		MOD:MS1200-A;XST:AUS,CHN,EUR,FRA,JAP,THAI	
	84010021A	ADJUSTER, OPENING ROCKER ARM 2.05 MM	4	24/12/2009		MOD:MS1200-A;XST:AUS,CHN,EUR,FRA,JAP,THAI	
	84010031A	ADJUSTER, OPENING ROCKER ARM 2.10 MM	4	24/12/2009		MOD:MS1200-A;XST:AUS,CHN,EUR,FRA,JAP,THAI	
	84010041A	ADJUSTER, OPENING ROCKER ARM 2.15 MM	4	24/12/2009		MOD:MS1200-A;XST:AUS,CHN,EUR,FRA,JAP,THAI	
	84010051A	ADJUSTER, OPENING ROCKER ARM 2.20 MM	4	24/12/2009		MOD:MS1200-A;XST:AUS,CHN,EUR,FRA,JAP,THAI	
	84010061A	ADJUSTER, OPENING ROCKER ARM 2.25 MM	4	24/12/2009		MOD:MS1200-A;XST:AUS,CHN,EUR,FRA,JAP,THAI	
	84010071A	ADJUSTER, OPENING ROCKER ARM 2.30 MM	4	24/12/2009		MOD:MS1200-A;XST:AUS,CHN,EUR,FRA,JAP,THAI	
	84010081A	ADJUSTER, OPENING ROCKER ARM 2.35 MM	4	24/12/2009		MOD:MS1200-A;XST:AUS,CHN,EUR,FRA,JAP,THAI	
	84010091A	ADJUSTER, OPENING ROCKER ARM 2.40 MM	4	24/12/2009		MOD:MS1200-A;XST:AUS,CHN,EUR,FRA,JAP,THAI	
	84010101A	ADJUSTER, OPENING ROCKER ARM 2.45 MM	4	24/12/2009		MOD:MS1200-A;XST:AUS,CHN,EUR,FRA,JAP,THAI	
	84010111A	ADJUSTER, OPENING ROCKER ARM 2.50 MM	4	24/12/2009		MOD:MS1200-A;XST:AUS,CHN,EUR,FRA,JAP,THAI	
	84010121A	ADJUSTER, OPENING ROCKER ARM 2.55 MM	4	24/12/2009		MOD:MS1200-A;XST:AUS,CHN,EUR,FRA,JAP,THAI	
	84010131A	ADJUSTER, OPENING ROCKER ARM 2.60 MM	4	24/12/2009		MOD:MS1200-A;XST:AUS,CHN,EUR,FRA,JAP,THAI	
	84010141A	ADJUSTER, OPENING ROCKER ARM 2.65 MM	4	24/12/2009		MOD:MS1200-A;XST:AUS,CHN,EUR,FRA,JAP,THAI	
	84010151A	ADJUSTER, OPENING ROCKER ARM 2.70 MM	4	24/12/2009		MOD:MS1200-A;XST:AUS,CHN,EUR,FRA,JAP,THAI	
	84010161A	ADJUSTER, OPENING ROCKER ARM 2.75 MM	4	24/12/2009		MOD:MS1200-A;XST:AUS,CHN,EUR,FRA,JAP,THAI	
	84010171A	ADJUSTER, OPENING ROCKER ARM 2.80 MM	4	24/12/2009		MOD:MS1200-A;XST:AUS,CHN,EUR,FRA,JAP,THAI	

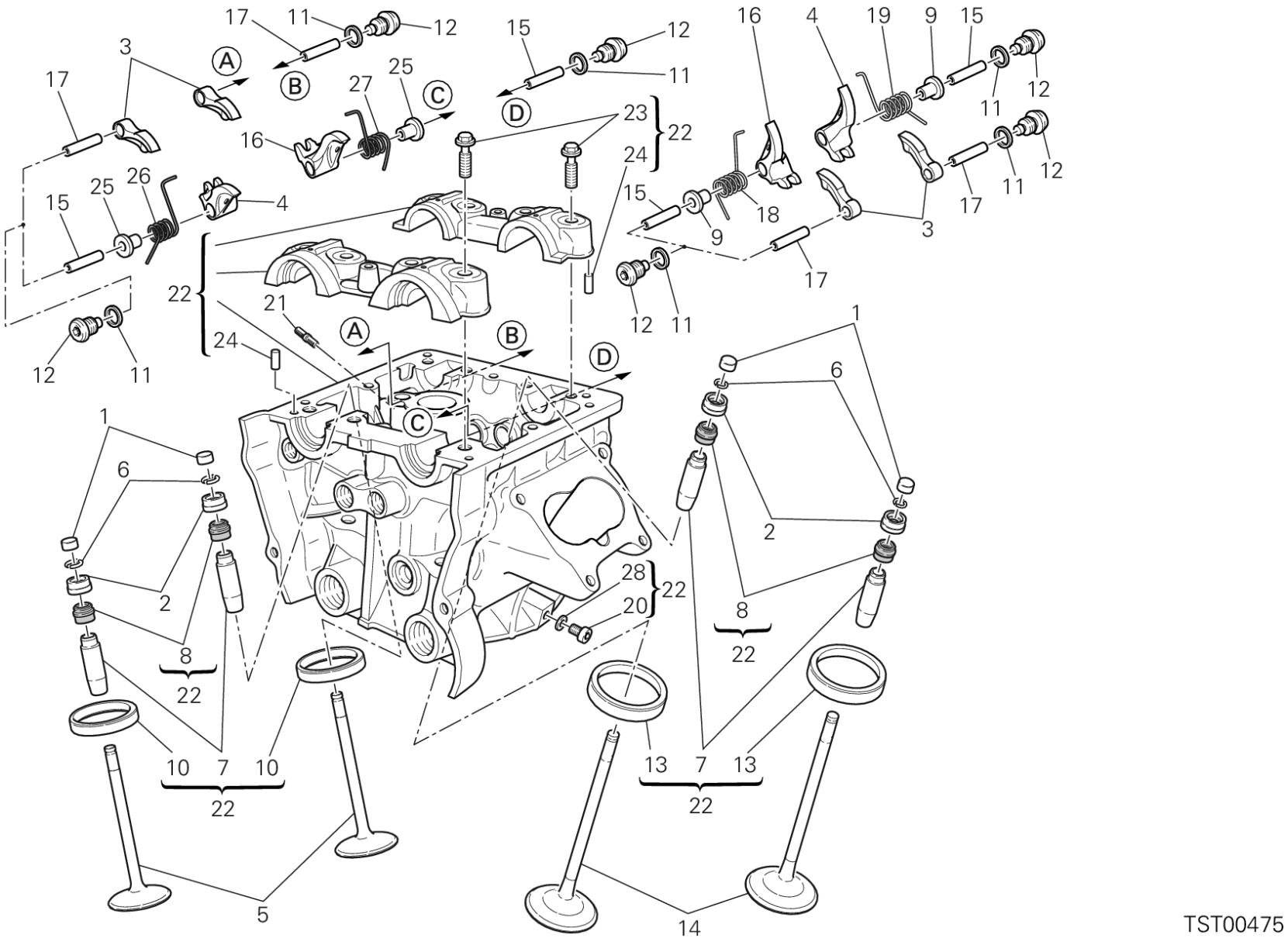
17
11
12
15
12
11
16
4
19
9
15
3
A
B
27
25
C
D
23
22
24
16
17
25
26
4
15
18
9
3
17
11
12
22
21
24
12
11
12
11
1
6
C
1
6
2
2
28
22
20
8
22
8
22
10
7
10
22
13
7
13
22
5
14
TST00475

POS.	CODE	DESCRIPTION	QTY	START DATE	END DATE	VALIDITY	NOTES
	84010181A	ADJUSTER, OPENING ROCKER ARM 2.85 MM	4	24/12/2009		MOD:MS1200-A;XST:AUS,CHN,EUR,FRA,JAP,THAI	
	84010191A	ADJUSTER, OPENING ROCKER ARM 2.90 MM	4	24/12/2009		MOD:MS1200-A;XST:AUS,CHN,EUR,FRA,JAP,THAI	
	84010201A	ADJUSTER, OPENING ROCKER ARM 2.95 MM	4	24/12/2009		MOD:MS1200-A;XST:AUS,CHN,EUR,FRA,JAP,THAI	
	84010211A	ADJUSTER, OPENING ROCKER ARM 3.00 MM	4	24/12/2009		MOD:MS1200-A;XST:AUS,CHN,EUR,FRA,JAP,THAI	
	84010221A	ADJUSTER, OPENING ROCKER ARM 3.05 MM	4	24/12/2009		MOD:MS1200-A;XST:AUS,CHN,EUR,FRA,JAP,THAI	
	84010231A	ADJUSTER, OPENING ROCKER ARM 3.10 MM	4	24/12/2009		MOD:MS1200-A;XST:AUS,CHN,EUR,FRA,JAP,THAI	
	84010241A	ADJUSTER, OPENING ROCKER ARM 3.15 MM	4	24/12/2009		MOD:MS1200-A;XST:AUS,CHN,EUR,FRA,JAP,THAI	
	84010251A	ADJUSTER, OPENING ROCKER ARM 3.20 MM	4	24/12/2009		MOD:MS1200-A;XST:AUS,CHN,EUR,FRA,JAP,THAI	
	84010261A	ADJUSTER, OPENING ROCKER ARM 3.25 MM	4	24/12/2009		MOD:MS1200-A;XST:AUS,CHN,EUR,FRA,JAP,THAI	
	84010271A	ADJUSTER, OPENING ROCKER ARM 3.30 MM	4	24/12/2009		MOD:MS1200-A;XST:AUS,CHN,EUR,FRA,JAP,THAI	
	84010281A	ADJUSTER, OPENING ROCKER ARM 3.35 MM	4	24/12/2009		MOD:MS1200-A;XST:AUS,CHN,EUR,FRA,JAP,THAI	
	84010291A	ADJUSTER, OPENING ROCKER ARM 3.40 MM	4	24/12/2009		MOD:MS1200-A;XST:AUS,CHN,EUR,FRA,JAP,THAI	
	84010301A	ADJUSTER, OPENING ROCKER ARM 3.45 MM	4	24/12/2009		MOD:MS1200-A;XST:AUS,CHN,EUR,FRA,JAP,THAI	
	84010311A	ADJUSTER, OPENING ROCKER ARM 1.80 MM	4	24/12/2009		MOD:MS1200-A;XST:AUS,CHN,EUR,FRA,JAP,THAI	
	84010321A	ADJUSTER, OPENING ROCKER ARM 1.85 MM	4	24/12/2009		MOD:MS1200-A;XST:AUS,CHN,EUR,FRA,JAP,THAI	
	84010331A	ADJUSTER, OPENING ROCKER ARM 1.90 MM	4	24/12/2009		MOD:MS1200-A;XST:AUS,CHN,EUR,FRA,JAP,THAI	
	84010341A	ADJUSTER, OPENING ROCKER ARM 1.95 MM	4	24/12/2009		MOD:MS1200-A;XST:AUS,CHN,EUR,FRA,JAP,THAI	

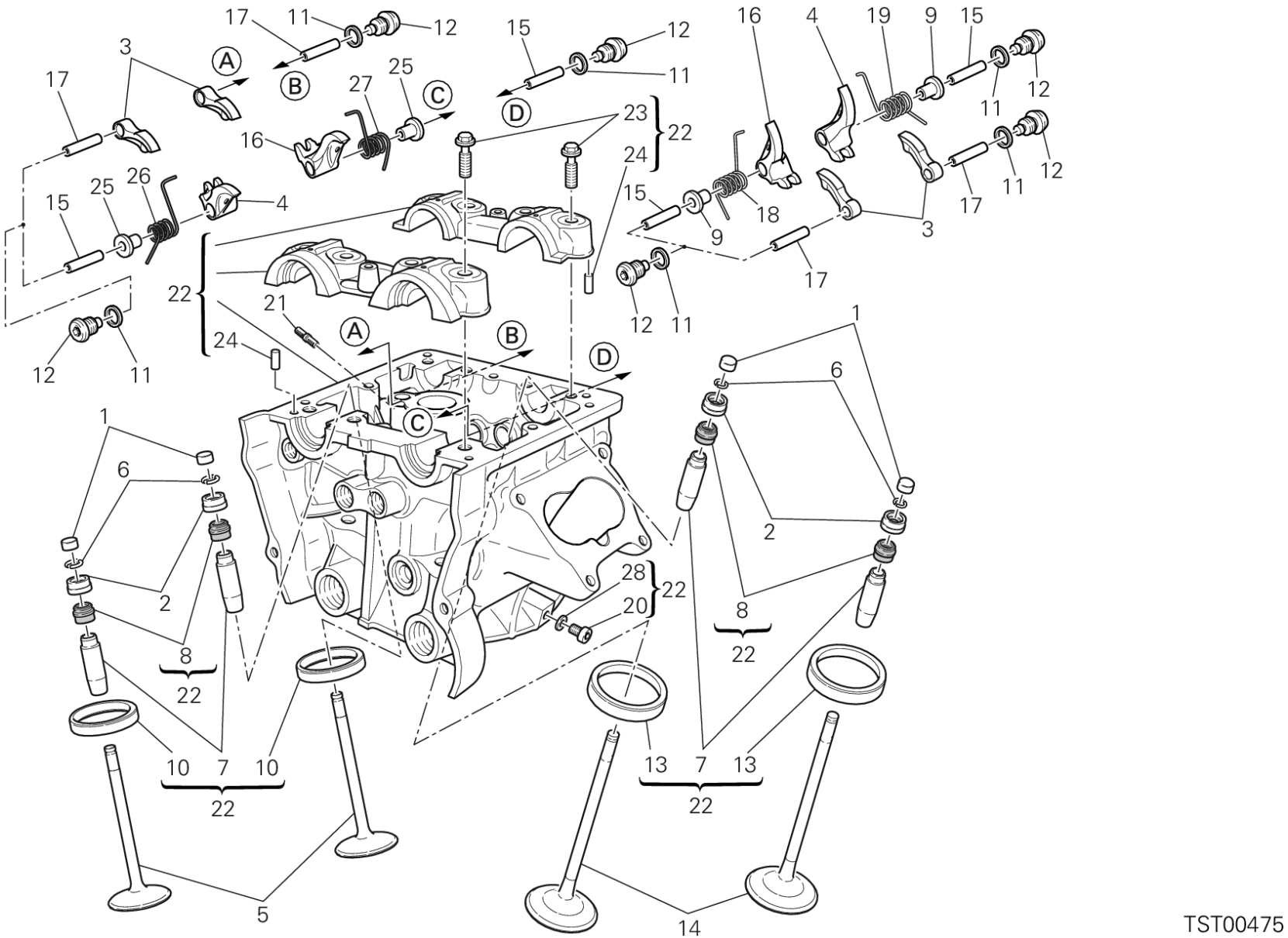
17
11
12
15
12
11
16
4
19
9
15
3
A
B
27
25
C
D
23
22
24
16
11
12
17
11
12
17
25
26
15
4
15
18
9
3
17
22
21
24
12
11
12
11
A
B
D
1
6
C
1
6
2
2
28
22
20
8
22
8
22
10
7
10
22
13
7
13
22
5
14
TST00475

POS.	CODE	DESCRIPTION	QTY	START DATE	END DATE	VALIDITY	NOTES
2	84010412B	ADJUSTER, CLOSING ROCKER ARM 2.20 MM	4	24/12/2009		MOD:MS1200-A;XST:AUS,CHN,EUR,FRA,JAP,THAI	
	84010422B	ADJUSTER, CLOSING ROCKER ARM 2.25 MM	4	24/12/2009		MOD:MS1200-A;XST:AUS,CHN,EUR,FRA,JAP,THAI	
	84010432B	ADJUSTER, CLOSING ROCKER ARM 2.30 MM	4	24/12/2009		MOD:MS1200-A;XST:AUS,CHN,EUR,FRA,JAP,THAI	
	84010442B	ADJUSTER, CLOSING ROCKER ARM 2.35 MM	4	24/12/2009		MOD:MS1200-A;XST:AUS,CHN,EUR,FRA,JAP,THAI	
	84010452B	ADJUSTER, CLOSING ROCKER ARM 2.40 MM	4	24/12/2009		MOD:MS1200-A;XST:AUS,CHN,EUR,FRA,JAP,THAI	
	84010462B	ADJUSTER, CLOSING ROCKER ARM 2.45 MM	4	24/12/2009		MOD:MS1200-A;XST:AUS,CHN,EUR,FRA,JAP,THAI	
	84010472B	ADJUSTER, CLOSING ROCKER ARM 2.50 MM	4	24/12/2009		MOD:MS1200-A;XST:AUS,CHN,EUR,FRA,JAP,THAI	
	84010482B	ADJUSTER, CLOSING ROCKER ARM 2.55 MM	4	24/12/2009		MOD:MS1200-A;XST:AUS,CHN,EUR,FRA,JAP,THAI	
	84010492B	ADJUSTER, CLOSING ROCKER ARM 2.60 MM	4	24/12/2009		MOD:MS1200-A;XST:AUS,CHN,EUR,FRA,JAP,THAI	
	84010502B	ADJUSTER, CLOSING ROCKER ARM 2.65 MM	4	24/12/2009		MOD:MS1200-A;XST:AUS,CHN,EUR,FRA,JAP,THAI	
	84010512B	ADJUSTER, CLOSING ROCKER ARM 2.70 MM	4	24/12/2009		MOD:MS1200-A;XST:AUS,CHN,EUR,FRA,JAP,THAI	
	84010522B	ADJUSTER, CLOSING ROCKER ARM 2.75 MM	4	24/12/2009		MOD:MS1200-A;XST:AUS,CHN,EUR,FRA,JAP,THAI	
	84010532B	ADJUSTER, CLOSING ROCKER ARM 2.80 MM	4	24/12/2009		MOD:MS1200-A;XST:AUS,CHN,EUR,FRA,JAP,THAI	
	84010542B	ADJUSTER, CLOSING ROCKER ARM 2.85 MM	4	24/12/2009		MOD:MS1200-A;XST:AUS,CHN,EUR,FRA,JAP,THAI	
	84010552B	ADJUSTER, CLOSING ROCKER ARM 2.90 MM	4	24/12/2009		MOD:MS1200-A;XST:AUS,CHN,EUR,FRA,JAP,THAI	
	84010562B	ADJUSTER, CLOSING ROCKER ARM 2.95 MM	4	24/12/2009		MOD:MS1200-A;XST:AUS,CHN,EUR,FRA,JAP,THAI	
	84010572B	ADJUSTER, CLOSING ROCKER ARM 3.00 MM	4	24/12/2009		MOD:MS1200-A;XST:AUS,CHN,EUR,FRA,JAP,THAI	

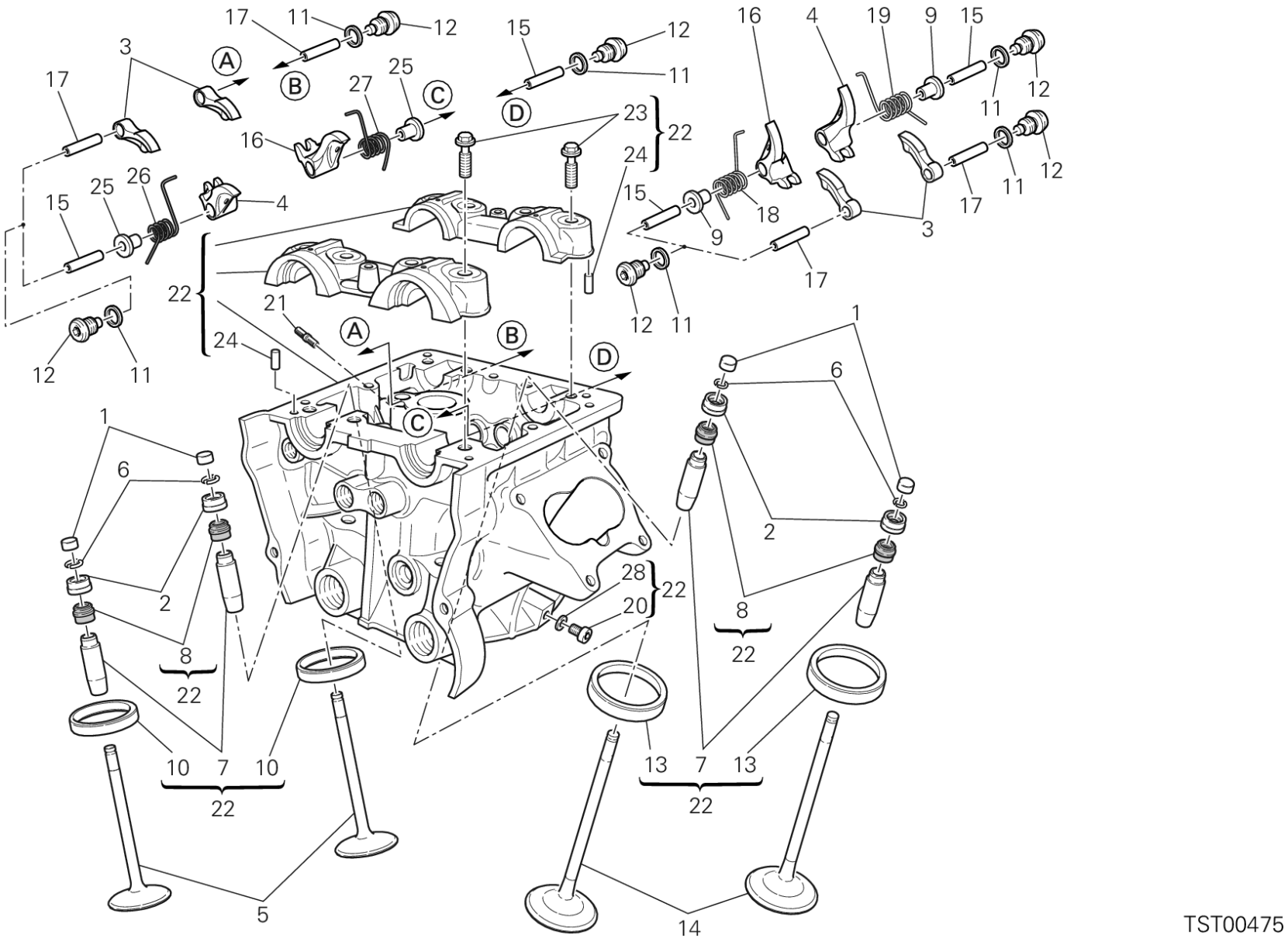
17
11
12
15
12
11
16
4
19
9
15
3
A
B
27
25
C
D
23
22
24
16
17
25
26
4
15
18
9
3
17
11
12
22
21
24
12
11
12
11
1
6
C
1
6
2
2
28
22
20
8
22
8
22
10
7
10
22
13
7
13
22
5
14
TST00475

POS.	CODE	DESCRIPTION	QTY	START DATE	END DATE	VALIDITY	NOTES
	84010582B	ADJUSTER, CLOSING ROCKER ARM 3.05 MM	4	24/12/2009		MOD:MS1200-A;XST:AUS,CHN,EUR,FRA,JAP,THAI	
	84010592B	ADJUSTER, CLOSING ROCKER ARM 3.10 MM	4	24/12/2009		MOD:MS1200-A;XST:AUS,CHN,EUR,FRA,JAP,THAI	
	84010602B	ADJUSTER, CLOSING ROCKER ARM 3.15 MM	4	24/12/2009		MOD:MS1200-A;XST:AUS,CHN,EUR,FRA,JAP,THAI	
	84010612B	ADJUSTER, CLOSING ROCKER ARM 3.20 MM	4	24/12/2009		MOD:MS1200-A;XST:AUS,CHN,EUR,FRA,JAP,THAI	
	84010622B	ADJUSTER, CLOSING ROCKER ARM 3.25 MM	4	24/12/2009		MOD:MS1200-A;XST:AUS,CHN,EUR,FRA,JAP,THAI	
	84010632B	ADJUSTER, CLOSING ROCKER ARM 3.30 MM	4	24/12/2009		MOD:MS1200-A;XST:AUS,CHN,EUR,FRA,JAP,THAI	
	84010642B	ADJUSTER, CLOSING ROCKER ARM 3.35 MM	4	24/12/2009		MOD:MS1200-A;XST:AUS,CHN,EUR,FRA,JAP,THAI	
	84010652B	ADJUSTER, CLOSING ROCKER ARM 3.40 MM	4	24/12/2009		MOD:MS1200-A;XST:AUS,CHN,EUR,FRA,JAP,THAI	
	84010662B	ADJUSTER, CLOSING ROCKER ARM 3.45 MM	4	24/12/2009		MOD:MS1200-A;XST:AUS,CHN,EUR,FRA,JAP,THAI	
	84010672B	ADJUSTER, CLOSING ROCKER ARM 3.50 MM	4	24/12/2009		MOD:MS1200-A;XST:AUS,CHN,EUR,FRA,JAP,THAI	
	84010682B	ADJUSTER, CLOSING ROCKER ARM 3.55 MM	4	24/12/2009		MOD:MS1200-A;XST:AUS,CHN,EUR,FRA,JAP,THAI	
	84010692B	ADJUSTER, CLOSING ROCKER ARM 3.60 MM	4	24/12/2009		MOD:MS1200-A;XST:AUS,CHN,EUR,FRA,JAP,THAI	
	84010702B	ADJUSTER, CLOSING ROCKER ARM 3.65 MM	4	24/12/2009		MOD:MS1200-A;XST:AUS,CHN,EUR,FRA,JAP,THAI	
	84010712B	ADJUSTER, CLOSING ROCKER ARM 3.70 MM	4	24/12/2009		MOD:MS1200-A;XST:AUS,CHN,EUR,FRA,JAP,THAI	
	84010722B	ADJUSTER, CLOSING ROCKER ARM 3.75 MM	4	24/12/2009		MOD:MS1200-A;XST:AUS,CHN,EUR,FRA,JAP,THAI	
	84010732B	ADJUSTER, CLOSING ROCKER ARM 3.80 MM	4	24/12/2009		MOD:MS1200-A;XST:AUS,CHN,EUR,FRA,JAP,THAI	
	84010742B	ADJUSTER, CLOSING ROCKER ARM 3.85 MM	4	24/12/2009		MOD:MS1200-A;XST:AUS,CHN,EUR,FRA,JAP,THAI	

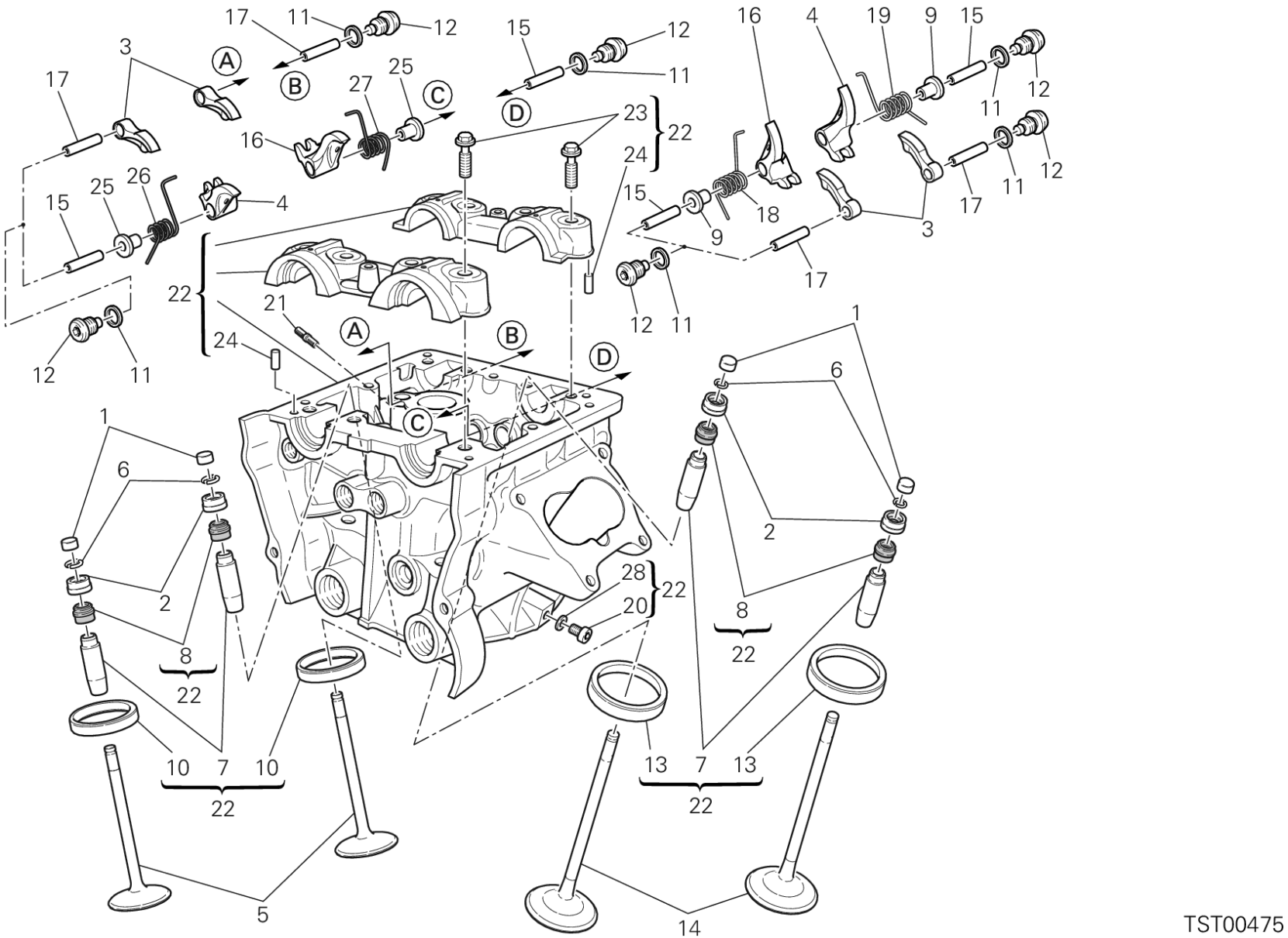
17
11
12
15
12
11
16
4
19
9
15
3
A
B
27
25
C
D
23
22
24
16
17
25
26
15
4
15
18
9
3
17
11
12
22
21
24
12
11
12
11
A
B
D
C
1
6
2
8
22
28
20
22
10
7
10
22
13
7
13
22
5
14
TST00475

POS.	CODE	DESCRIPTION	QTY	START DATE	END DATE	VALIDITY	NOTES
	84010752B	ADJUSTER, CLOSING ROCKER ARM 3.90 MM	4	24/12/2009		MOD:MS1200-A;XST:AUS,CHN,EUR,FRA,JAP,THAI	
	84010762B	ADJUSTER, CLOSING ROCKER ARM 3.95 MM	4	24/12/2009		MOD:MS1200-A;XST:AUS,CHN,EUR,FRA,JAP,THAI	
	84010772B	ADJUSTER, CLOSING ROCKER ARM 4.00 MM	4	24/12/2009		MOD:MS1200-A;XST:AUS,CHN,EUR,FRA,JAP,THAI	
	84010782B	ADJUSTER, CLOSING ROCKER ARM 4.05 MM	4	24/12/2009		MOD:MS1200-A;XST:AUS,CHN,EUR,FRA,JAP,THAI	
	84010792B	ADJUSTER, CLOSING ROCKER ARM 4.10 MM	4	24/12/2009		MOD:MS1200-A;XST:AUS,CHN,EUR,FRA,JAP,THAI	
	84010802B	ADJUSTER, CLOSING ROCKER ARM 4.15 MM	4	24/12/2009		MOD:MS1200-A;XST:AUS,CHN,EUR,FRA,JAP,THAI	
	84010812B	ADJUSTER, CLOSING ROCKER ARM 4.20 MM	4	24/12/2009		MOD:MS1200-A;XST:AUS,CHN,EUR,FRA,JAP,THAI	
	84010822B	ADJUSTER, CLOSING ROCKER ARM 4.25 MM	4	24/12/2009		MOD:MS1200-A;XST:AUS,CHN,EUR,FRA,JAP,THAI	
	84010832B	ADJUSTER, CLOSING ROCKER ARM 4.30 MM	4	24/12/2009		MOD:MS1200-A;XST:AUS,CHN,EUR,FRA,JAP,THAI	
	84010842B	ADJUSTER, CLOSING ROCKER ARM 4.35 MM	4	24/12/2009		MOD:MS1200-A;XST:AUS,CHN,EUR,FRA,JAP,THAI	
	84010852B	ADJUSTER, CLOSING ROCKER ARM 4.40 MM	4	24/12/2009		MOD:MS1200-A;XST:AUS,CHN,EUR,FRA,JAP,THAI	
	84010862B	ADJUSTER, CLOSING ROCKER ARM 4.45 MM	4	24/12/2009		MOD:MS1200-A;XST:AUS,CHN,EUR,FRA,JAP,THAI	
	84010872B	ADJUSTER, CLOSING ROCKER ARM 4.50 MM	4	24/12/2009		MOD:MS1200-A;XST:AUS,CHN,EUR,FRA,JAP,THAI	
3	20810321A	OPEN. ROCKER ARM	4	29/06/2012		MOD:MS1200-A;XST:AUS,CHN,EUR,FRA,JAP,THAI	
4	20910501A	CLOSING ROCKER ARM LEFT	2	29/06/2012		MOD:MS1200-A;XST:AUS,CHN,EUR,FRA,JAP,THAI	
5	21110771B	EXHAUST VALVE	2	29/06/2012		MOD:MS1200-A;XST:AUS,CHN,EUR,FRA,JAP,THAI	
6	66910011E	C RING	8	29/06/2012		MOD:MS1200-A;XST:AUS,CHN,EUR,FRA,JAP,THAI	

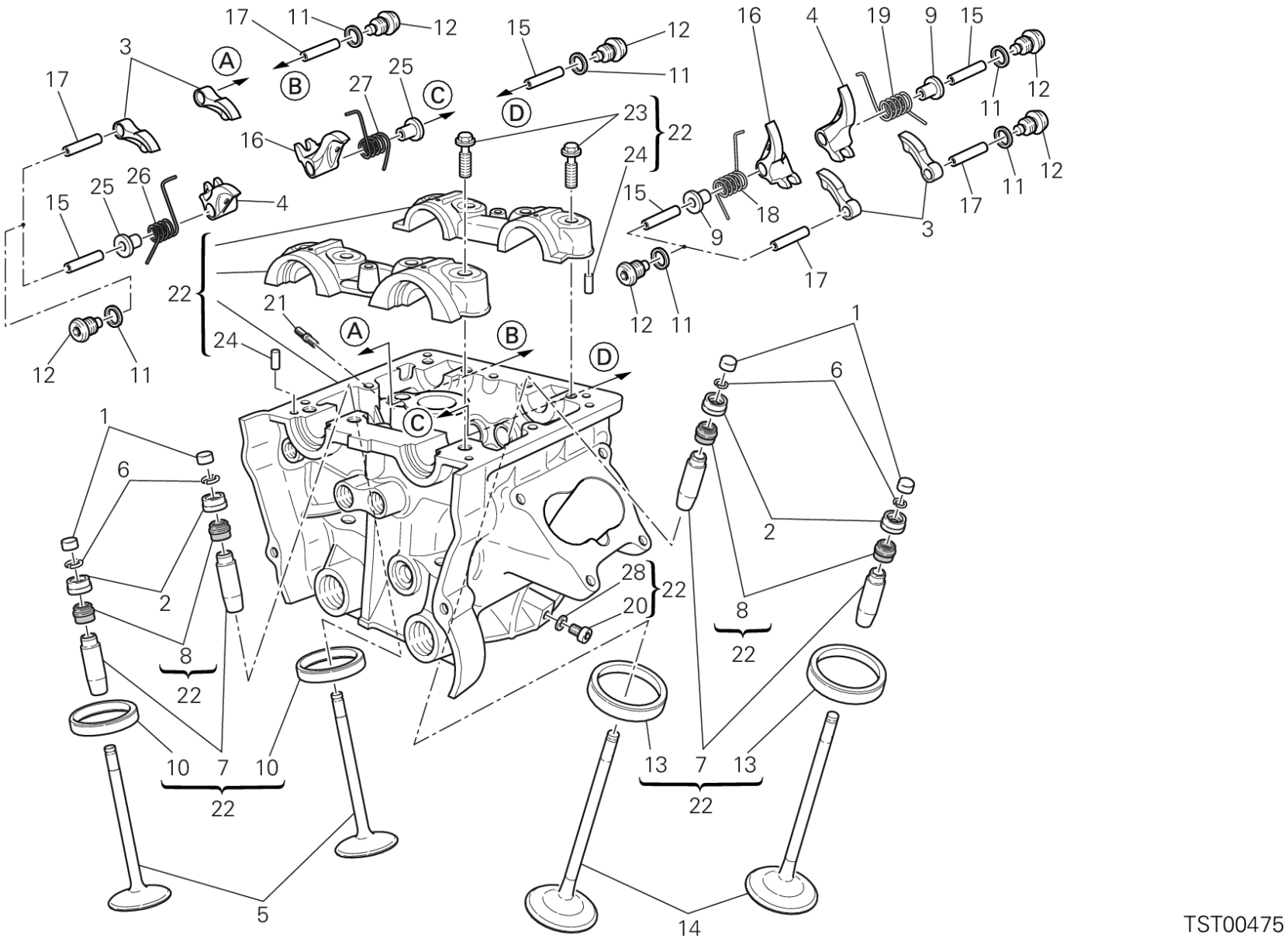
17
11
12
15
12
11
16
4
19
9
15
3
A
B
27
25
C
D
23
22
24
16
11
12
17
11
12
17
25
26
15
4
15
18
9
3
17
22
21
24
12
11
12
11
A
B
D
1
6
C
1
6
2
2
28
22
20
8
22
8
22
10
7
10
22
13
7
13
22
5
14
TST00475

POS.	CODE	DESCRIPTION	QTY	START DATE	END DATE	VALIDITY	NOTES
7	30310631BB	GUIDE, VALVE OVERSIZED 0.03 MM	4	16/05/2011		MOD:MS1200-A;XST:AUS,CHN,EUR,FRA,JAP,THAI	
	30310631BC	GUIDE, VALVE OVERSIZED 0.06 MM	4	16/05/2011		MOD:MS1200-A;XST:AUS,CHN,EUR,FRA,JAP,THAI	
	30310631BD	GUIDE, VALVE OVERSIZED 0.09 MM	4	16/05/2011		MOD:MS1200-A;XST:AUS,CHN,EUR,FRA,JAP,THAI	
8	76410871A	SEAL VALVE STEM	4	03/04/2012		MOD:MS1200-A;XST:AUS,CHN,EUR,FRA,JAP,THAI	
9	71312921A	SPACER	2	29/06/2012		MOD:MS1200-A;XST:AUS,CHN,EUR,FRA,JAP,THAI	
10	30410891A	SEAT, EXHAUST VALVE	2	03/04/2012		MOD:MS1200-A;XST:AUS,CHN,EUR,FRA,JAP,THAI	
	30410891AB	SEAT, EXHAUST VALVE +0.03 MM	2	16/05/2011		MOD:MS1200-A;XST:AUS,CHN,EUR,FRA,JAP,THAI	
	30410891AC	SEAT, EXHAUST VALVE +0.06 MM	2	16/05/2011		MOD:MS1200-A;XST:AUS,CHN,EUR,FRA,JAP,THAI	
11	85250261B	GASKET, ALUMINIUM 12X16X1.5	8	29/06/2012		MOD:MS1200-A;XST:AUS,CHN,EUR,FRA,JAP,THAI	
12	78010511E	PLUG	8	29/06/2012		MOD:MS1200-A;XST:AUS,CHN,EUR,FRA,JAP,THAI	
13	30410881A	SEAT, INTAKE VALVE	2	03/04/2012		MOD:MS1200-A;XST:AUS,CHN,EUR,FRA,JAP,THAI	
	30410881AB	SEAT, INLET VALVE +0.03 MM	2	16/05/2011		MOD:MS1200-A;XST:AUS,CHN,EUR,FRA,JAP,THAI	
	30410881AC	SEAT, INLET VALVE +0.06 MM	2	16/05/2011		MOD:MS1200-A;XST:AUS,CHN,EUR,FRA,JAP,THAI	
14	21010781A	INTAKE VALVE	2	29/06/2012		MOD:MS1200-A;XST:AUS,CHN,EUR,FRA,JAP,THAI	
15	82112231B	AXLE, ROCKER ARM CLOSING	4	29/06/2012		MOD:MS1200-A;XST:AUS,CHN,EUR,FRA,JAP,THAI	
16	20910491A	CLOSING ROCKER ARM RIGHT	2	29/06/2012		MOD:MS1200-A;XST:AUS,CHN,EUR,FRA,JAP,THAI	
17	82112221B	AXLE, ROCKER ARM OPENING	4	29/06/2012		MOD:MS1200-A;XST:AUS,CHN,EUR,FRA,JAP,THAI	

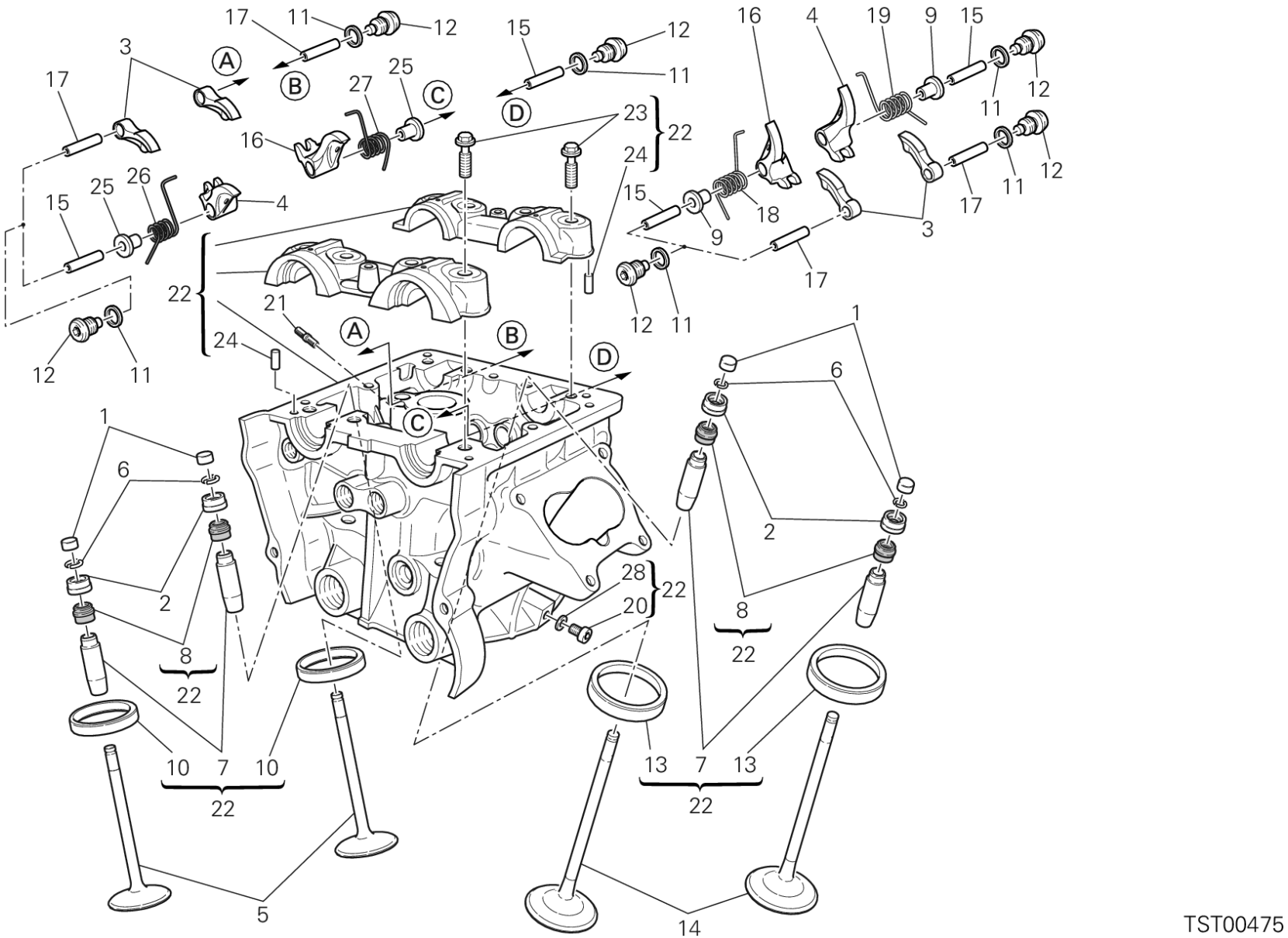
17
11
12
15
12
11
16
4
19
9
15
3
A
B
27
25
C
D
23
22
24
16
17
25
26
4
15
18
9
3
17
11
12
22
21
24
12
11
12
11
1
6
C
1
6
2
2
28
22
20
8
22
8
22
10
7
10
22
13
7
13
22
5
14
TST00475

DRAWING 014 - VERTICAL CYLINDER HEAD [MOD:MS1200-A;XST:AUS,CHN,EUR,FRA,JAP,THAI]

GROUP ENGINE

POS.	CODE	DESCRIPTION	QTY	START DATE	END DATE	VALIDITY	NOTES
18	79914861A	VALVE RETURN SPRING RH.	1	29/06/2012		MOD:MS1200-A;XST:AUS,CHN,EUR,FRA,JAP,THAI	
19	79914851A	VALVE RETURN SPRING LH.	1	29/06/2012		MOD:MS1200-A;XST:AUS,CHN,EUR,FRA,JAP,THAI	
20	77350618B	SCREW TCEIR M6X8	1	03/04/2012		MOD:MS1200-A;XST:AUS,CHN,EUR,FRA,JAP,THAI	
21	76610891A	STUD BOLT	3	29/06/2012		MOD:MS1200-A;XST:AUS,CHN,EUR,FRA,JAP,THAI	
22	30124621A	COMPLETE VERTICAL HEAD	1	29/06/2012		MOD:MS1200-A;XST:AUS,CHN,EUR,FRA,JAP,THAI	
23	77914211A	SCREW TEF M8X32	8	03/04/2012		MOD:MS1200-A;XST:AUS,CHN,EUR,FRA,JAP,THAI	
24	86050061A	PIN M5X10	4	03/04/2012		MOD:MS1200-A;XST:AUS,CHN,EUR,FRA,JAP,THAI	
25	71312921B	SPACER	2	29/06/2012		MOD:MS1200-A;XST:AUS,CHN,EUR,FRA,JAP,THAI	
26	79915181A	LEFT VALVE RETURN SPRING	1	29/06/2012		MOD:MS1200-A;XST:AUS,CHN,EUR,FRA,JAP,THAI	
27	79915191A	RIGHT VALVE RETURN SPRING	1	29/06/2012		MOD:MS1200-A;XST:AUS,CHN,EUR,FRA,JAP,THAI	
28	85250231A	GASKET	1	29/06/2012		MOD:MS1200-A;XST:AUS,CHN,EUR,FRA,JAP,THAI	

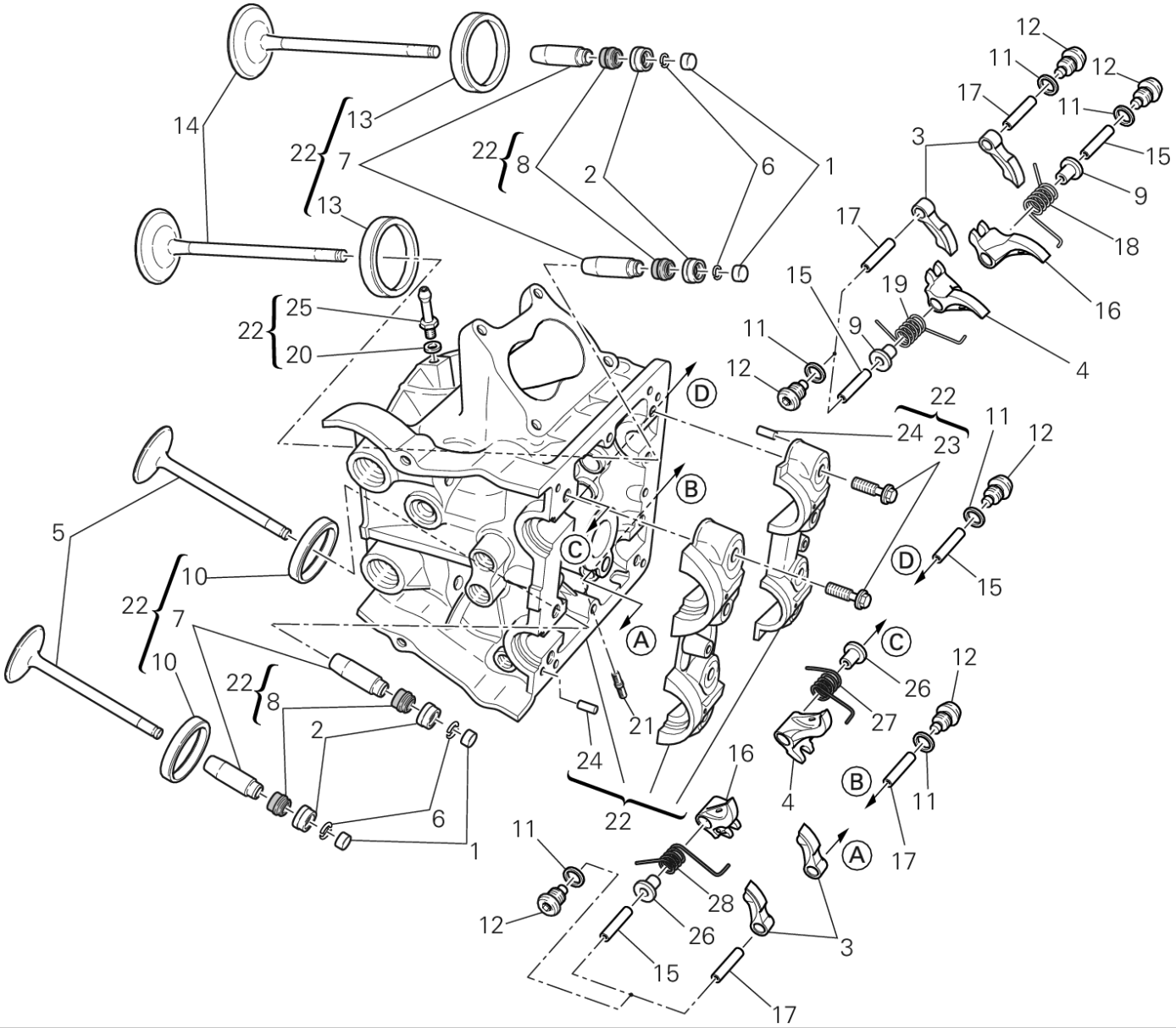
TST00476

POS.	CODE	DESCRIPTION	QTY	START DATE	END DATE	VALIDITY	NOTES
1	84010011A	ADJUSTER, OPENING ROCKER ARM 2.00 MM	4	24/12/2009		MOD:MS1200-A;XST:AUS,CHN,EUR,FRA,JAP,THAI	
	84010021A	ADJUSTER, OPENING ROCKER ARM 2.05 MM	4	24/12/2009		MOD:MS1200-A;XST:AUS,CHN,EUR,FRA,JAP,THAI	
	84010031A	ADJUSTER, OPENING ROCKER ARM 2.10 MM	4	24/12/2009		MOD:MS1200-A;XST:AUS,CHN,EUR,FRA,JAP,THAI	
	84010041A	ADJUSTER, OPENING ROCKER ARM 2.15 MM	4	24/12/2009		MOD:MS1200-A;XST:AUS,CHN,EUR,FRA,JAP,THAI	
	84010051A	ADJUSTER, OPENING ROCKER ARM 2.20 MM	4	24/12/2009		MOD:MS1200-A;XST:AUS,CHN,EUR,FRA,JAP,THAI	
	84010061A	ADJUSTER, OPENING ROCKER ARM 2.25 MM	4	24/12/2009		MOD:MS1200-A;XST:AUS,CHN,EUR,FRA,JAP,THAI	
	84010071A	ADJUSTER, OPENING ROCKER ARM 2.30 MM	4	24/12/2009		MOD:MS1200-A;XST:AUS,CHN,EUR,FRA,JAP,THAI	
	84010081A	ADJUSTER, OPENING ROCKER ARM 2.35 MM	4	24/12/2009		MOD:MS1200-A;XST:AUS,CHN,EUR,FRA,JAP,THAI	
	84010091A	ADJUSTER, OPENING ROCKER ARM 2.40 MM	4	24/12/2009		MOD:MS1200-A;XST:AUS,CHN,EUR,FRA,JAP,THAI	
	84010101A	ADJUSTER, OPENING ROCKER ARM 2.45 MM	4	24/12/2009		MOD:MS1200-A;XST:AUS,CHN,EUR,FRA,JAP,THAI	
	84010111A	ADJUSTER, OPENING ROCKER ARM 2.50 MM	4	24/12/2009		MOD:MS1200-A;XST:AUS,CHN,EUR,FRA,JAP,THAI	
	84010121A	ADJUSTER, OPENING ROCKER ARM 2.55 MM	4	24/12/2009		MOD:MS1200-A;XST:AUS,CHN,EUR,FRA,JAP,THAI	
	84010131A	ADJUSTER, OPENING ROCKER ARM 2.60 MM	4	24/12/2009		MOD:MS1200-A;XST:AUS,CHN,EUR,FRA,JAP,THAI	
	84010141A	ADJUSTER, OPENING ROCKER ARM 2.65 MM	4	24/12/2009		MOD:MS1200-A;XST:AUS,CHN,EUR,FRA,JAP,THAI	
	84010151A	ADJUSTER, OPENING ROCKER ARM 2.70 MM	4	24/12/2009		MOD:MS1200-A;XST:AUS,CHN,EUR,FRA,JAP,THAI	
	84010161A	ADJUSTER, OPENING ROCKER ARM 2.75 MM	4	24/12/2009		MOD:MS1200-A;XST:AUS,CHN,EUR,FRA,JAP,THAI	
	84010171A	ADJUSTER, OPENING ROCKER ARM 2.80 MM	4	24/12/2009		MOD:MS1200-A;XST:AUS,CHN,EUR,FRA,JAP,THAI	

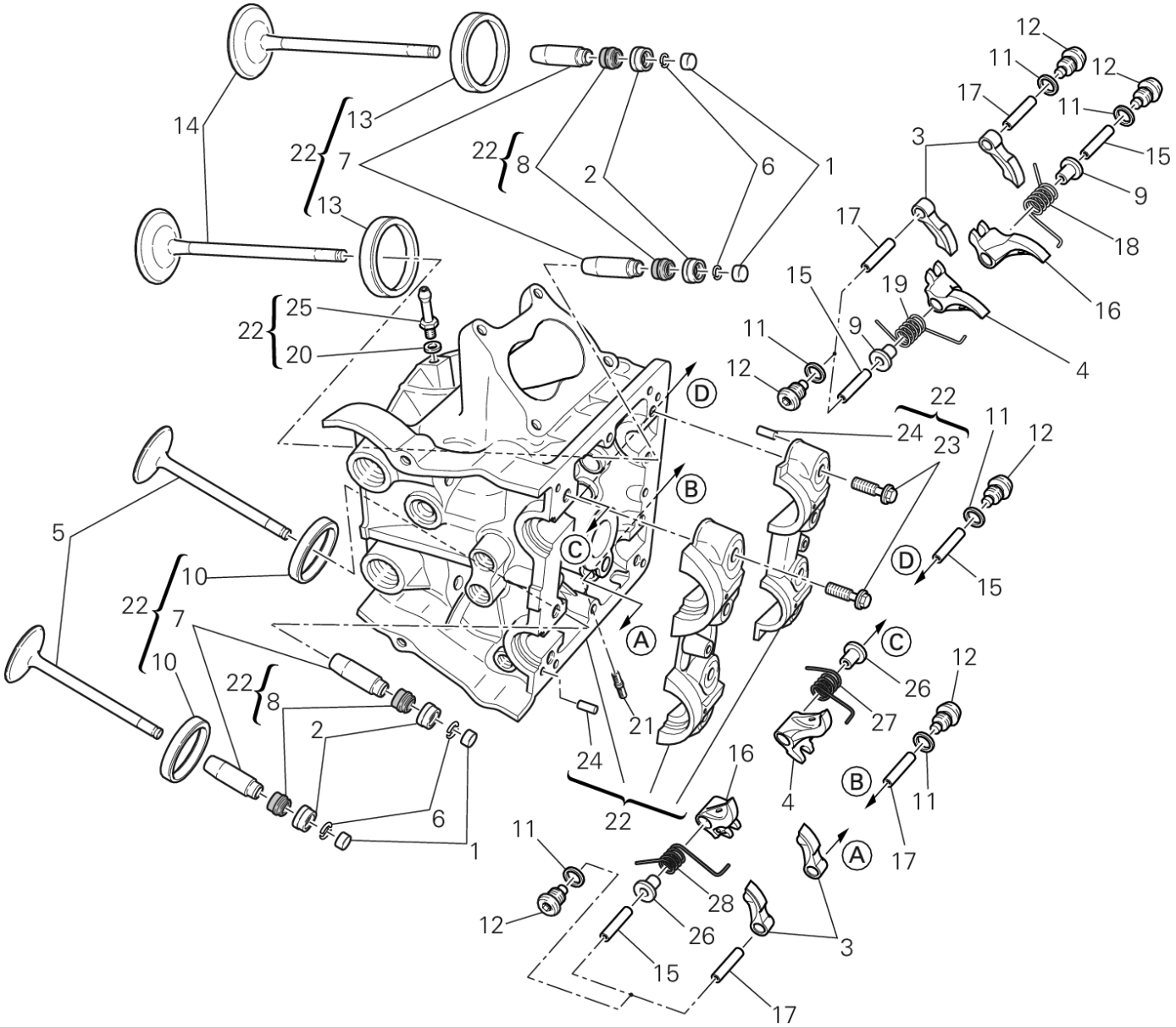
TST00476

POS.	CODE	DESCRIPTION	QTY	START DATE	END DATE	VALIDITY	NOTES
	84010181A	ADJUSTER, OPENING ROCKER ARM 2.85 MM	4	24/12/2009		MOD:MS1200-A;XST:AUS,CHN,EUR,FRA,JAP,THAI	
	84010191A	ADJUSTER, OPENING ROCKER ARM 2.90 MM	4	24/12/2009		MOD:MS1200-A;XST:AUS,CHN,EUR,FRA,JAP,THAI	
	84010201A	ADJUSTER, OPENING ROCKER ARM 2.95 MM	4	24/12/2009		MOD:MS1200-A;XST:AUS,CHN,EUR,FRA,JAP,THAI	
	84010211A	ADJUSTER, OPENING ROCKER ARM 3.00 MM	4	24/12/2009		MOD:MS1200-A;XST:AUS,CHN,EUR,FRA,JAP,THAI	
	84010221A	ADJUSTER, OPENING ROCKER ARM 3.05 MM	4	24/12/2009		MOD:MS1200-A;XST:AUS,CHN,EUR,FRA,JAP,THAI	
	84010231A	ADJUSTER, OPENING ROCKER ARM 3.10 MM	4	24/12/2009		MOD:MS1200-A;XST:AUS,CHN,EUR,FRA,JAP,THAI	
	84010241A	ADJUSTER, OPENING ROCKER ARM 3.15 MM	4	24/12/2009		MOD:MS1200-A;XST:AUS,CHN,EUR,FRA,JAP,THAI	
	84010251A	ADJUSTER, OPENING ROCKER ARM 3.20 MM	4	24/12/2009		MOD:MS1200-A;XST:AUS,CHN,EUR,FRA,JAP,THAI	
	84010261A	ADJUSTER, OPENING ROCKER ARM 3.25 MM	4	24/12/2009		MOD:MS1200-A;XST:AUS,CHN,EUR,FRA,JAP,THAI	
	84010271A	ADJUSTER, OPENING ROCKER ARM 3.30 MM	4	24/12/2009		MOD:MS1200-A;XST:AUS,CHN,EUR,FRA,JAP,THAI	
	84010281A	ADJUSTER, OPENING ROCKER ARM 3.35 MM	4	24/12/2009		MOD:MS1200-A;XST:AUS,CHN,EUR,FRA,JAP,THAI	
	84010291A	ADJUSTER, OPENING ROCKER ARM 3.40 MM	4	24/12/2009		MOD:MS1200-A;XST:AUS,CHN,EUR,FRA,JAP,THAI	
	84010301A	ADJUSTER, OPENING ROCKER ARM 3.45 MM	4	24/12/2009		MOD:MS1200-A;XST:AUS,CHN,EUR,FRA,JAP,THAI	
	84010311A	ADJUSTER, OPENING ROCKER ARM 1.80 MM	4	24/12/2009		MOD:MS1200-A;XST:AUS,CHN,EUR,FRA,JAP,THAI	
	84010321A	ADJUSTER, OPENING ROCKER ARM 1.85 MM	4	24/12/2009		MOD:MS1200-A;XST:AUS,CHN,EUR,FRA,JAP,THAI	
	84010331A	ADJUSTER, OPENING ROCKER ARM 1.90 MM	4	24/12/2009		MOD:MS1200-A;XST:AUS,CHN,EUR,FRA,JAP,THAI	
	84010341A	ADJUSTER, OPENING ROCKER ARM 1.95 MM	4	24/12/2009		MOD:MS1200-A;XST:AUS,CHN,EUR,FRA,JAP,THAI	

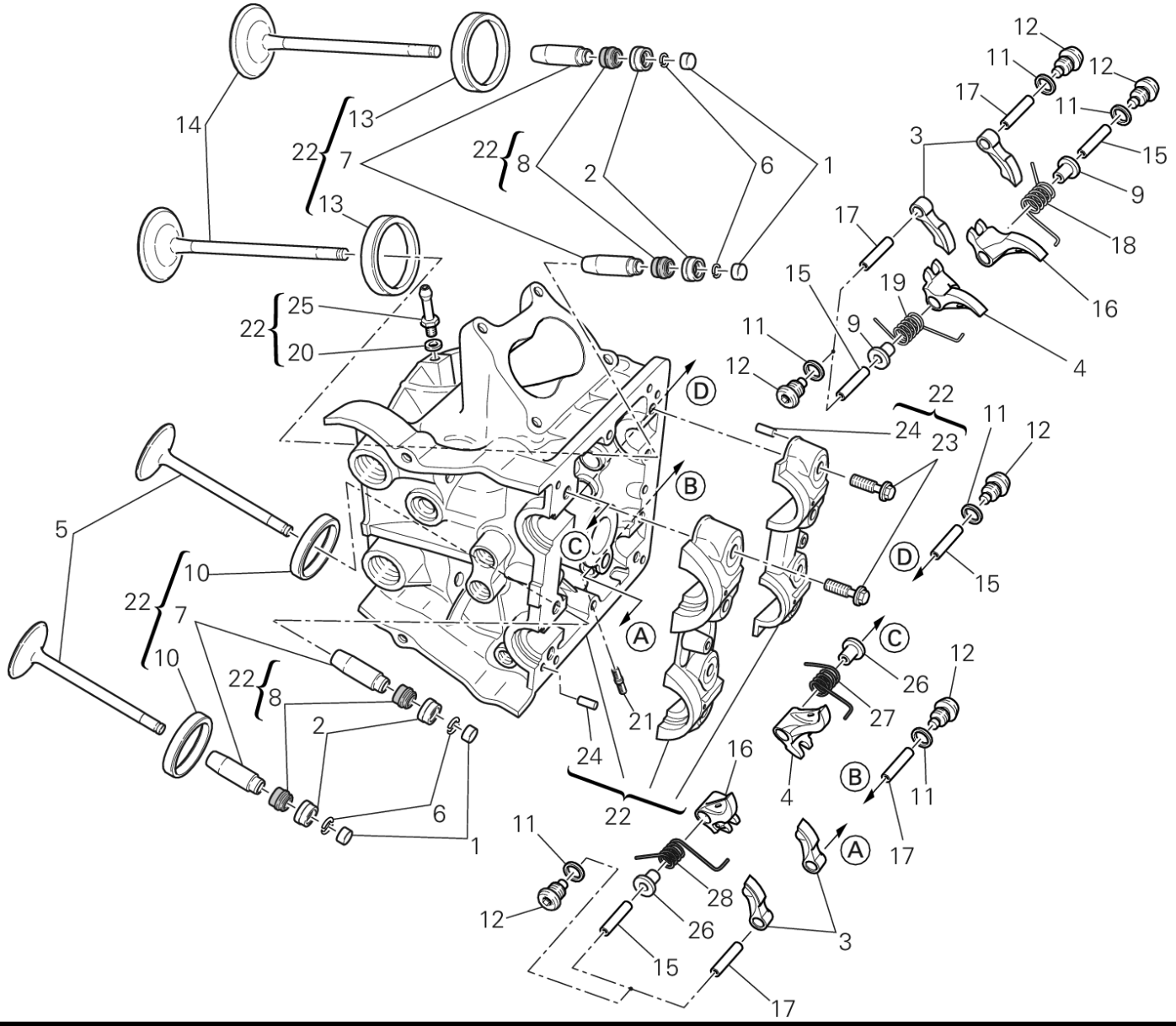
TST00476

POS.	CODE	DESCRIPTION	QTY	START DATE	END DATE	VALIDITY	NOTES
2	84010412B	ADJUSTER, CLOSING ROCKER ARM 2.20 MM	4	24/12/2009		MOD:MS1200-A;XST:AUS,CHN,EUR,FRA,JAP,THAI	
	84010422B	ADJUSTER, CLOSING ROCKER ARM 2.25 MM	4	24/12/2009		MOD:MS1200-A;XST:AUS,CHN,EUR,FRA,JAP,THAI	
	84010432B	ADJUSTER, CLOSING ROCKER ARM 2.30 MM	4	24/12/2009		MOD:MS1200-A;XST:AUS,CHN,EUR,FRA,JAP,THAI	
	84010442B	ADJUSTER, CLOSING ROCKER ARM 2.35 MM	4	24/12/2009		MOD:MS1200-A;XST:AUS,CHN,EUR,FRA,JAP,THAI	
	84010452B	ADJUSTER, CLOSING ROCKER ARM 2.40 MM	4	24/12/2009		MOD:MS1200-A;XST:AUS,CHN,EUR,FRA,JAP,THAI	
	84010462B	ADJUSTER, CLOSING ROCKER ARM 2.45 MM	4	24/12/2009		MOD:MS1200-A;XST:AUS,CHN,EUR,FRA,JAP,THAI	
	84010472B	ADJUSTER, CLOSING ROCKER ARM 2.50 MM	4	24/12/2009		MOD:MS1200-A;XST:AUS,CHN,EUR,FRA,JAP,THAI	
	84010482B	ADJUSTER, CLOSING ROCKER ARM 2.55 MM	4	24/12/2009		MOD:MS1200-A;XST:AUS,CHN,EUR,FRA,JAP,THAI	
	84010492B	ADJUSTER, CLOSING ROCKER ARM 2.60 MM	4	24/12/2009		MOD:MS1200-A;XST:AUS,CHN,EUR,FRA,JAP,THAI	
	84010502B	ADJUSTER, CLOSING ROCKER ARM 2.65 MM	4	24/12/2009		MOD:MS1200-A;XST:AUS,CHN,EUR,FRA,JAP,THAI	
	84010512B	ADJUSTER, CLOSING ROCKER ARM 2.70 MM	4	24/12/2009		MOD:MS1200-A;XST:AUS,CHN,EUR,FRA,JAP,THAI	
	84010522B	ADJUSTER, CLOSING ROCKER ARM 2.75 MM	4	24/12/2009		MOD:MS1200-A;XST:AUS,CHN,EUR,FRA,JAP,THAI	
	84010532B	ADJUSTER, CLOSING ROCKER ARM 2.80 MM	4	24/12/2009		MOD:MS1200-A;XST:AUS,CHN,EUR,FRA,JAP,THAI	
	84010542B	ADJUSTER, CLOSING ROCKER ARM 2.85 MM	4	24/12/2009		MOD:MS1200-A;XST:AUS,CHN,EUR,FRA,JAP,THAI	
	84010552B	ADJUSTER, CLOSING ROCKER ARM 2.90 MM	4	24/12/2009		MOD:MS1200-A;XST:AUS,CHN,EUR,FRA,JAP,THAI	
	84010562B	ADJUSTER, CLOSING ROCKER ARM 2.95 MM	4	24/12/2009		MOD:MS1200-A;XST:AUS,CHN,EUR,FRA,JAP,THAI	
	84010572B	ADJUSTER, CLOSING ROCKER ARM 3.00 MM	4	24/12/2009		MOD:MS1200-A;XST:AUS,CHN,EUR,FRA,JAP,THAI	

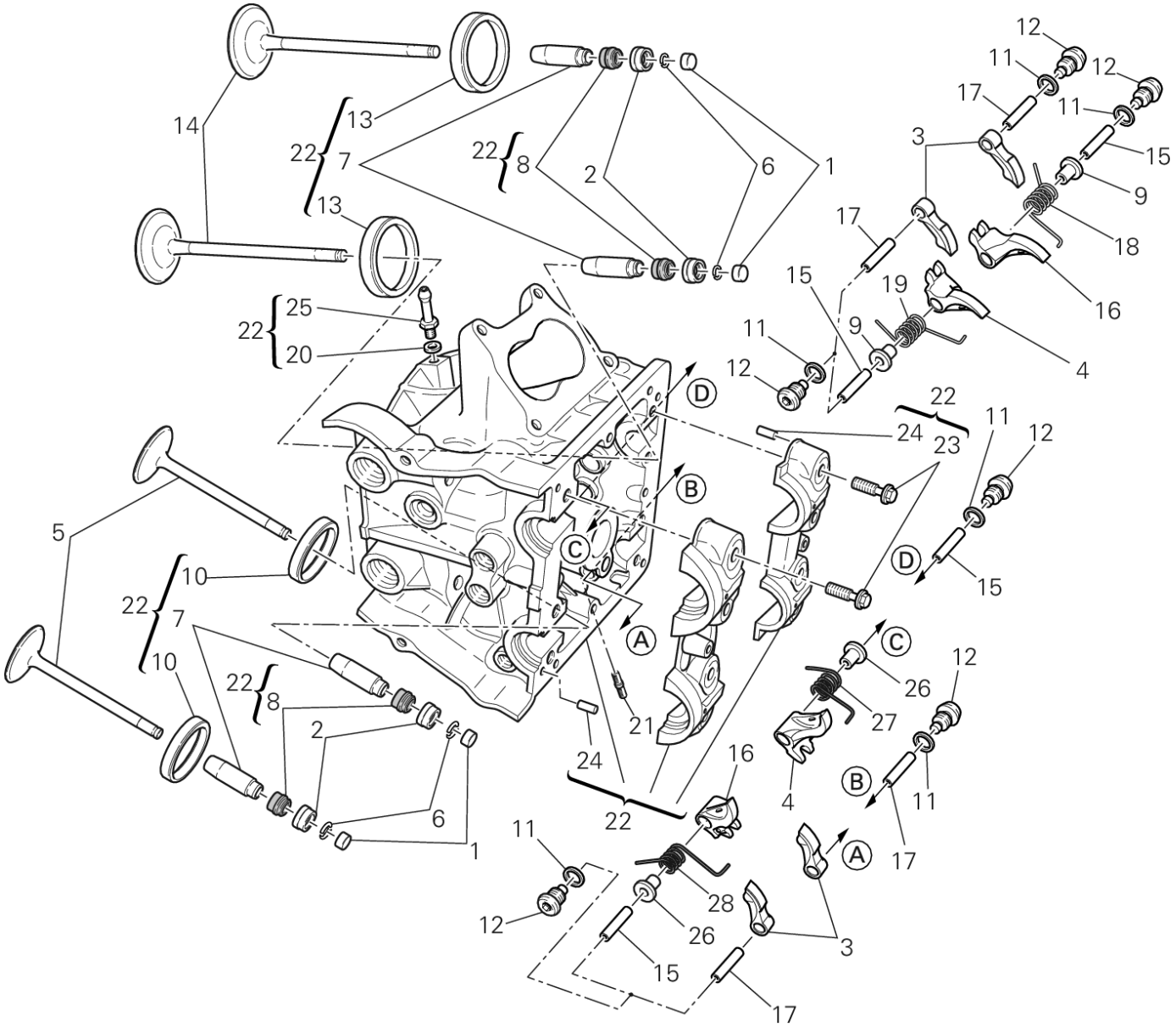
TST00476

POS.	CODE	DESCRIPTION	QTY	START DATE	END DATE	VALIDITY	NOTES
	84010582B	ADJUSTER, CLOSING ROCKER ARM 3.05 MM	4	24/12/2009		MOD:MS1200-A;XST:AUS,CHN,EUR,FRA,JAP,THAI	
	84010592B	ADJUSTER, CLOSING ROCKER ARM 3.10 MM	4	24/12/2009		MOD:MS1200-A;XST:AUS,CHN,EUR,FRA,JAP,THAI	
	84010602B	ADJUSTER, CLOSING ROCKER ARM 3.15 MM	4	24/12/2009		MOD:MS1200-A;XST:AUS,CHN,EUR,FRA,JAP,THAI	
	84010612B	ADJUSTER, CLOSING ROCKER ARM 3.20 MM	4	24/12/2009		MOD:MS1200-A;XST:AUS,CHN,EUR,FRA,JAP,THAI	
	84010622B	ADJUSTER, CLOSING ROCKER ARM 3.25 MM	4	24/12/2009		MOD:MS1200-A;XST:AUS,CHN,EUR,FRA,JAP,THAI	
	84010632B	ADJUSTER, CLOSING ROCKER ARM 3.30 MM	4	24/12/2009		MOD:MS1200-A;XST:AUS,CHN,EUR,FRA,JAP,THAI	
	84010642B	ADJUSTER, CLOSING ROCKER ARM 3.35 MM	4	24/12/2009		MOD:MS1200-A;XST:AUS,CHN,EUR,FRA,JAP,THAI	
	84010652B	ADJUSTER, CLOSING ROCKER ARM 3.40 MM	4	24/12/2009		MOD:MS1200-A;XST:AUS,CHN,EUR,FRA,JAP,THAI	
	84010662B	ADJUSTER, CLOSING ROCKER ARM 3.45 MM	4	24/12/2009		MOD:MS1200-A;XST:AUS,CHN,EUR,FRA,JAP,THAI	
	84010672B	ADJUSTER, CLOSING ROCKER ARM 3.50 MM	4	24/12/2009		MOD:MS1200-A;XST:AUS,CHN,EUR,FRA,JAP,THAI	
	84010682B	ADJUSTER, CLOSING ROCKER ARM 3.55 MM	4	24/12/2009		MOD:MS1200-A;XST:AUS,CHN,EUR,FRA,JAP,THAI	
	84010692B	ADJUSTER, CLOSING ROCKER ARM 3.60 MM	4	24/12/2009		MOD:MS1200-A;XST:AUS,CHN,EUR,FRA,JAP,THAI	
	84010702B	ADJUSTER, CLOSING ROCKER ARM 3.65 MM	4	24/12/2009		MOD:MS1200-A;XST:AUS,CHN,EUR,FRA,JAP,THAI	
	84010712B	ADJUSTER, CLOSING ROCKER ARM 3.70 MM	4	24/12/2009		MOD:MS1200-A;XST:AUS,CHN,EUR,FRA,JAP,THAI	
	84010722B	ADJUSTER, CLOSING ROCKER ARM 3.75 MM	4	24/12/2009		MOD:MS1200-A;XST:AUS,CHN,EUR,FRA,JAP,THAI	
	84010732B	ADJUSTER, CLOSING ROCKER ARM 3.80 MM	4	24/12/2009		MOD:MS1200-A;XST:AUS,CHN,EUR,FRA,JAP,THAI	
	84010742B	ADJUSTER, CLOSING ROCKER ARM 3.85 MM	4	24/12/2009		MOD:MS1200-A;XST:AUS,CHN,EUR,FRA,JAP,THAI	

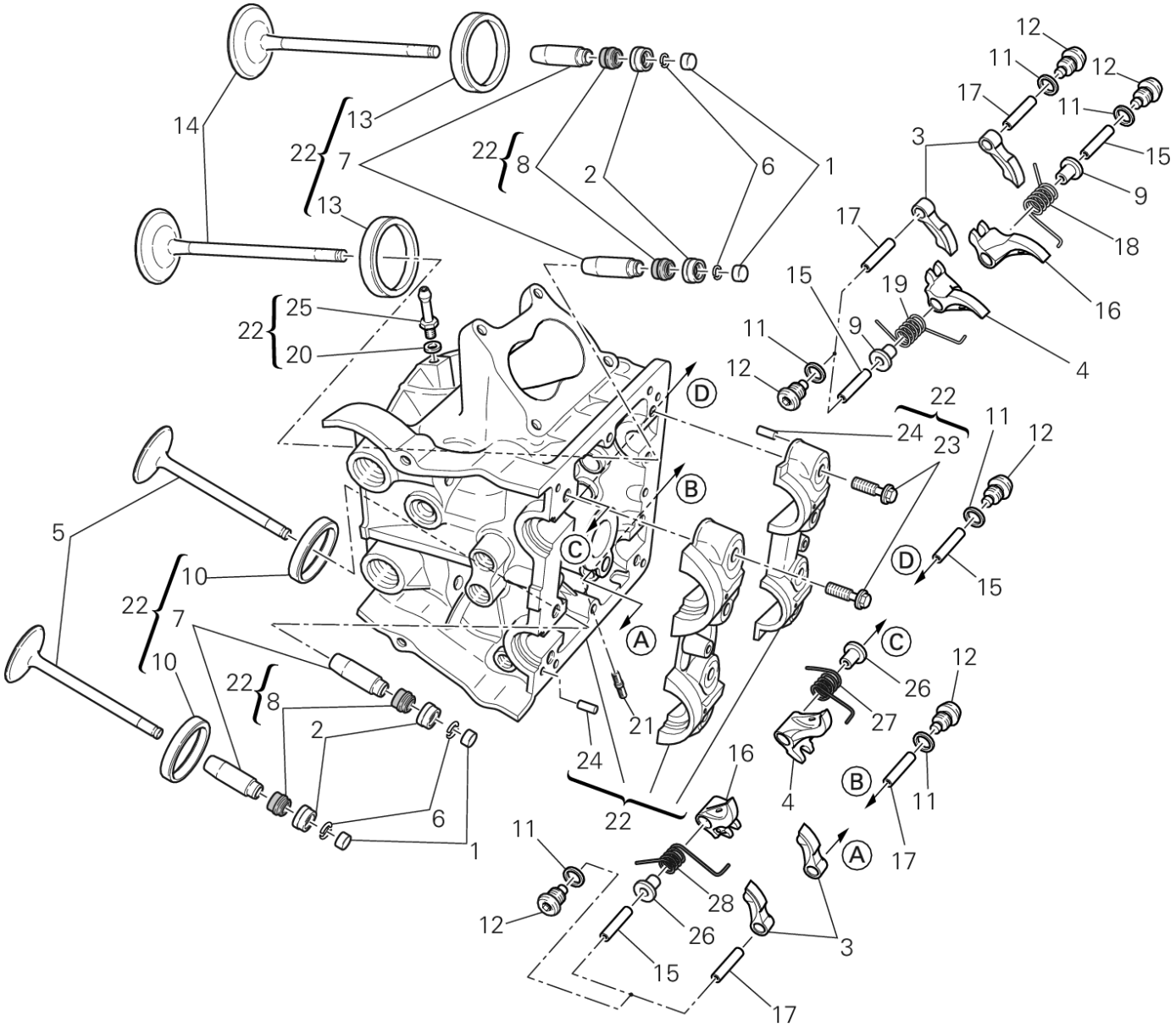
TST00476

POS.	CODE	DESCRIPTION	QTY	START DATE	END DATE	VALIDITY	NOTES
	84010752B	ADJUSTER, CLOSING ROCKER ARM 3.90 MM	4	24/12/2009		MOD:MS1200-A;XST:AUS,CHN,EUR,FRA,JAP,THAI	
	84010762B	ADJUSTER, CLOSING ROCKER ARM 3.95 MM	4	24/12/2009		MOD:MS1200-A;XST:AUS,CHN,EUR,FRA,JAP,THAI	
	84010772B	ADJUSTER, CLOSING ROCKER ARM 4.00 MM	4	24/12/2009		MOD:MS1200-A;XST:AUS,CHN,EUR,FRA,JAP,THAI	
	84010782B	ADJUSTER, CLOSING ROCKER ARM 4.05 MM	4	24/12/2009		MOD:MS1200-A;XST:AUS,CHN,EUR,FRA,JAP,THAI	
	84010792B	ADJUSTER, CLOSING ROCKER ARM 4.10 MM	4	24/12/2009		MOD:MS1200-A;XST:AUS,CHN,EUR,FRA,JAP,THAI	
	84010802B	ADJUSTER, CLOSING ROCKER ARM 4.15 MM	4	24/12/2009		MOD:MS1200-A;XST:AUS,CHN,EUR,FRA,JAP,THAI	
	84010812B	ADJUSTER, CLOSING ROCKER ARM 4.20 MM	4	24/12/2009		MOD:MS1200-A;XST:AUS,CHN,EUR,FRA,JAP,THAI	
	84010822B	ADJUSTER, CLOSING ROCKER ARM 4.25 MM	4	24/12/2009		MOD:MS1200-A;XST:AUS,CHN,EUR,FRA,JAP,THAI	
	84010832B	ADJUSTER, CLOSING ROCKER ARM 4.30 MM	4	24/12/2009		MOD:MS1200-A;XST:AUS,CHN,EUR,FRA,JAP,THAI	
	84010842B	ADJUSTER, CLOSING ROCKER ARM 4.35 MM	4	24/12/2009		MOD:MS1200-A;XST:AUS,CHN,EUR,FRA,JAP,THAI	
	84010852B	ADJUSTER, CLOSING ROCKER ARM 4.40 MM	4	24/12/2009		MOD:MS1200-A;XST:AUS,CHN,EUR,FRA,JAP,THAI	
	84010862B	ADJUSTER, CLOSING ROCKER ARM 4.45 MM	4	24/12/2009		MOD:MS1200-A;XST:AUS,CHN,EUR,FRA,JAP,THAI	
	84010872B	ADJUSTER, CLOSING ROCKER ARM 4.50 MM	4	24/12/2009		MOD:MS1200-A;XST:AUS,CHN,EUR,FRA,JAP,THAI	
3	20810321A	OPEN. ROCKER ARM	4	29/06/2012		MOD:MS1200-A;XST:AUS,CHN,EUR,FRA,JAP,THAI	
4	20910501A	CLOSING ROCKER ARM LEFT	2	29/06/2012		MOD:MS1200-A;XST:AUS,CHN,EUR,FRA,JAP,THAI	
5	21110771B	EXHAUST VALVE	2	29/06/2012		MOD:MS1200-A;XST:AUS,CHN,EUR,FRA,JAP,THAI	
6	66910011E	C RING	8	29/06/2012		MOD:MS1200-A;XST:AUS,CHN,EUR,FRA,JAP,THAI	

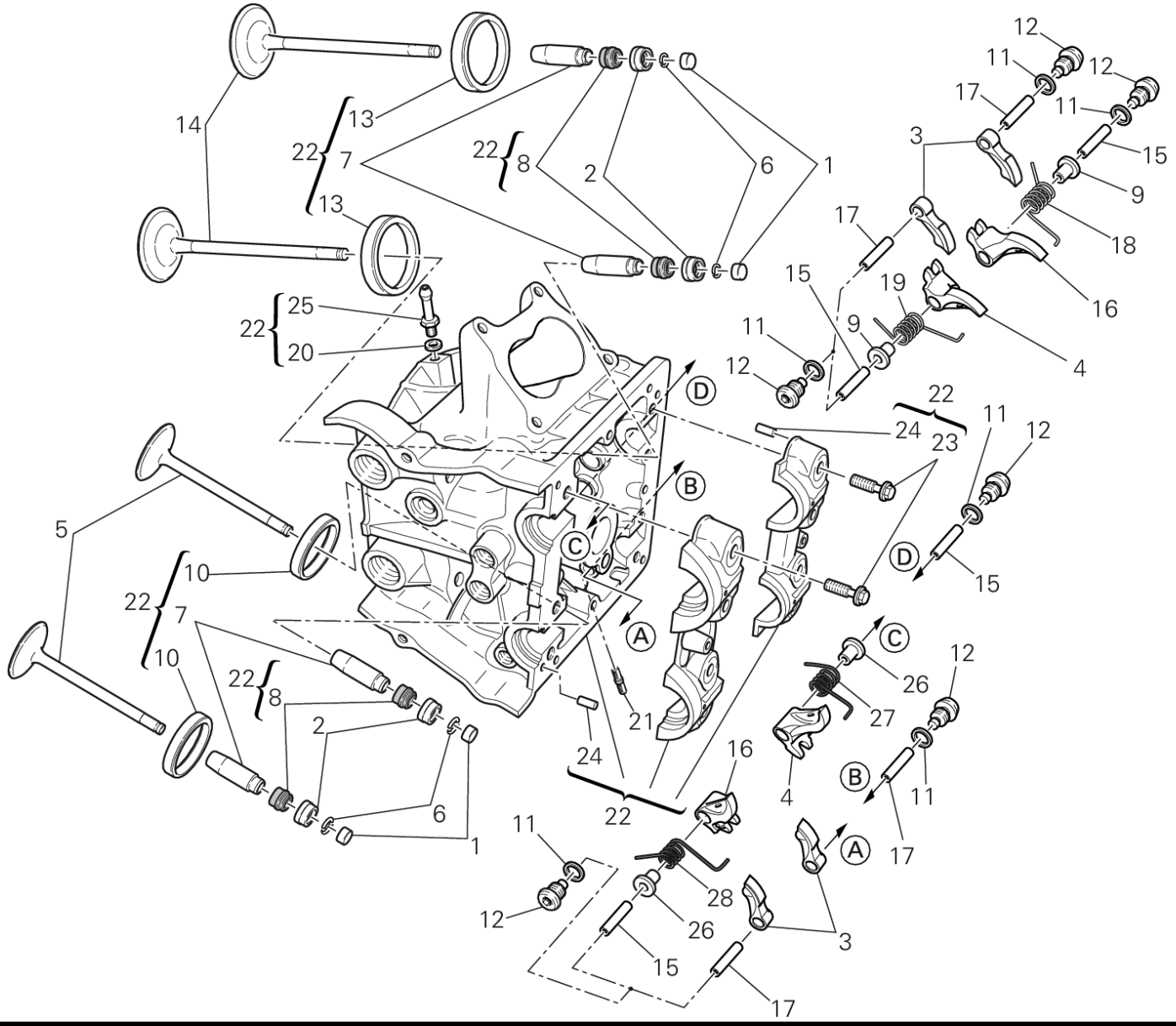
TST00476

POS.	CODE	DESCRIPTION	QTY	START DATE	END DATE	VALIDITY	NOTES
7	30310631BB	GUIDE, VALVE OVERSIZED 0.03 MM	4	28/09/2011		MOD:MS1200-A;XST:AUS,CHN,EUR,FRA,JAP,THAI	
	30310631BC	GUIDE, VALVE OVERSIZED 0.06 MM	4	28/09/2011		MOD:MS1200-A;XST:AUS,CHN,EUR,FRA,JAP,THAI	
	30310631BD	GUIDE, VALVE OVERSIZED 0.09 MM	4	28/09/2011		MOD:MS1200-A;XST:AUS,CHN,EUR,FRA,JAP,THAI	
8	76410871A	SEAL VALVE STEM	4	03/04/2012		MOD:MS1200-A;XST:AUS,CHN,EUR,FRA,JAP,THAI	
9	71312921A	SPACER	2	29/06/2012		MOD:MS1200-A;XST:AUS,CHN,EUR,FRA,JAP,THAI	
10	30410891A	SEAT, EXHAUST VALVE	2	03/04/2012		MOD:MS1200-A;XST:AUS,CHN,EUR,FRA,JAP,THAI	
	30410891AB	SEAT, EXHAUST VALVE +0.03 MM	2	28/09/2011		MOD:MS1200-A;XST:AUS,CHN,EUR,FRA,JAP,THAI	
	30410891AC	SEAT, EXHAUST VALVE +0.06 MM	2	28/09/2011		MOD:MS1200-A;XST:AUS,CHN,EUR,FRA,JAP,THAI	
11	85250261B	GASKET, ALUMINIUM 12X16X1.5	8	29/06/2012		MOD:MS1200-A;XST:AUS,CHN,EUR,FRA,JAP,THAI	
12	78010511E	PLUG	8	29/06/2012		MOD:MS1200-A;XST:AUS,CHN,EUR,FRA,JAP,THAI	
13	30410881A	SEAT, INTAKE VALVE	2	03/04/2012		MOD:MS1200-A;XST:AUS,CHN,EUR,FRA,JAP,THAI	
	30410881AB	SEAT, INLET VALVE +0.03 MM	2	28/09/2011		MOD:MS1200-A;XST:AUS,CHN,EUR,FRA,JAP,THAI	
	30410881AC	SEAT, INLET VALVE +0.06 MM	2	28/09/2011		MOD:MS1200-A;XST:AUS,CHN,EUR,FRA,JAP,THAI	
14	21010781A	INTAKE VALVE	2	29/06/2012		MOD:MS1200-A;XST:AUS,CHN,EUR,FRA,JAP,THAI	
15	82112231B	AXLE, ROCKER ARM CLOSING	4	29/06/2012		MOD:MS1200-A;XST:AUS,CHN,EUR,FRA,JAP,THAI	
16	20910491A	CLOSING ROCKER ARM RIGHT	2	29/06/2012		MOD:MS1200-A;XST:AUS,CHN,EUR,FRA,JAP,THAI	
17	82112221B	AXLE, ROCKER ARM OPENING	4	29/06/2012		MOD:MS1200-A;XST:AUS,CHN,EUR,FRA,JAP,THAI	

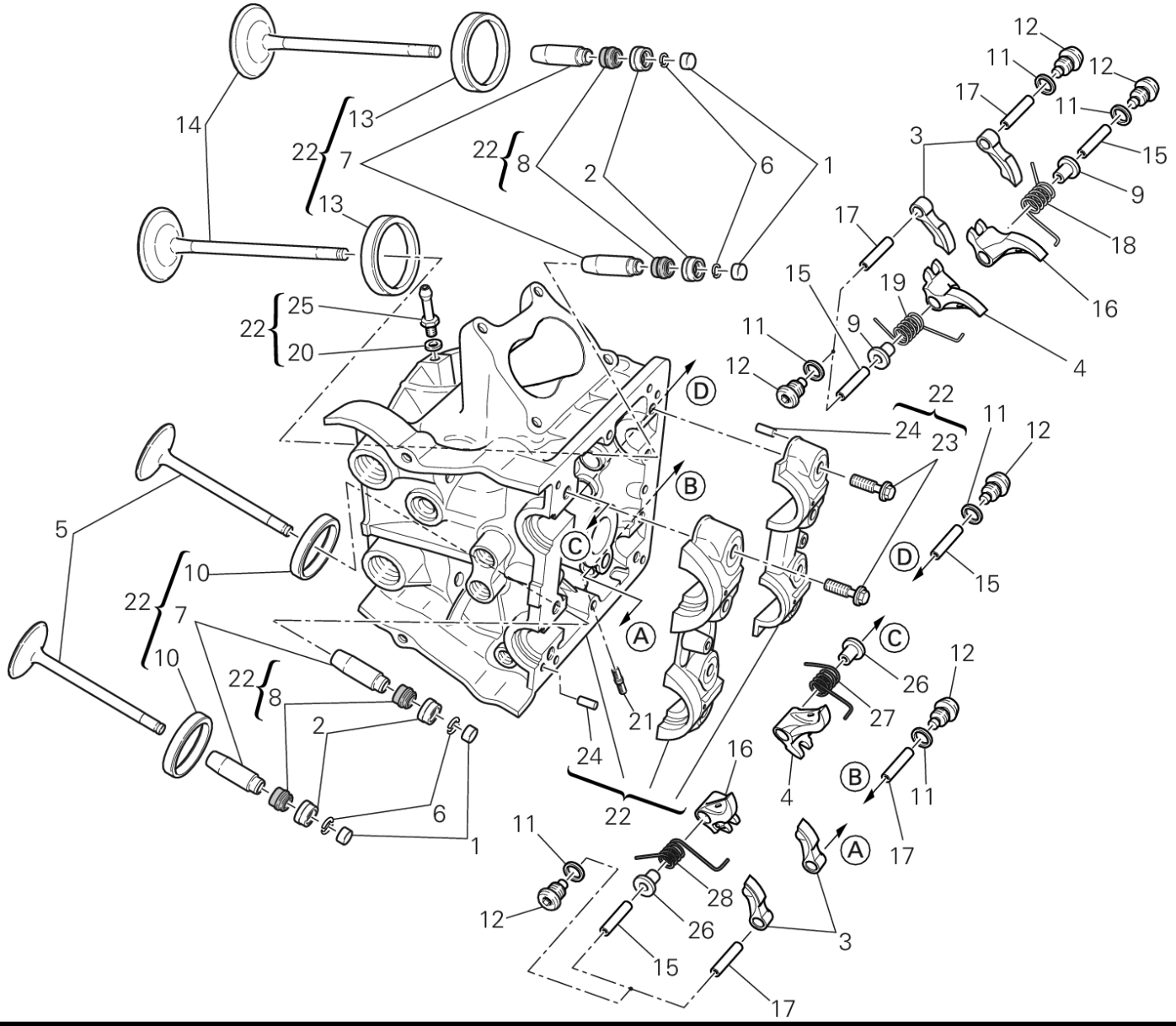
TST00476

POS.	CODE	DESCRIPTION	QTY	START DATE	END DATE	VALIDITY	NOTES
18	79914861A	VALVE RETURN SPRING RH.	1	29/06/2012		MOD:MS1200-A;XST:AUS,CHN,EUR,FRA,JAP,THAI	
19	79914851A	VALVE RETURN SPRING LH.	1	29/06/2012		MOD:MS1200-A;XST:AUS,CHN,EUR,FRA,JAP,THAI	
20	85250231A	GASKET	1	03/04/2012		MOD:MS1200-A;XST:AUS,CHN,EUR,FRA,JAP,THAI	
21	76610891A	STUD BOLT	3	29/06/2012		MOD:MS1200-A;XST:AUS,CHN,EUR,FRA,JAP,THAI	
22	30124611A	COMPLETE HORIZONTAL HEAD	1	29/06/2012		MOD:MS1200-A;XST:AUS,CHN,EUR,FRA,JAP,THAI	
23	77914211A	SCREW TEF M8X32	8	03/04/2012		MOD:MS1200-A;XST:AUS,CHN,EUR,FRA,JAP,THAI	
24	86050061A	PIN M5X10	4	03/04/2012		MOD:MS1200-A;XST:AUS,CHN,EUR,FRA,JAP,THAI	
25	81411881A	NIPPLE, HOSE	1	03/04/2012		MOD:MS1200-A;XST:AUS,CHN,EUR,FRA,JAP,THAI	
26	71312921B	SPACER	2	29/06/2012		MOD:MS1200-A;XST:AUS,CHN,EUR,FRA,JAP,THAI	
27	79915181A	LEFT VALVE RETURN SPRING	1	29/06/2012		MOD:MS1200-A;XST:AUS,CHN,EUR,FRA,JAP,THAI	
28	79915191A	RIGHT VALVE RETURN SPRING	1	29/06/2012		MOD:MS1200-A;XST:AUS,CHN,EUR,FRA,JAP,THAI	

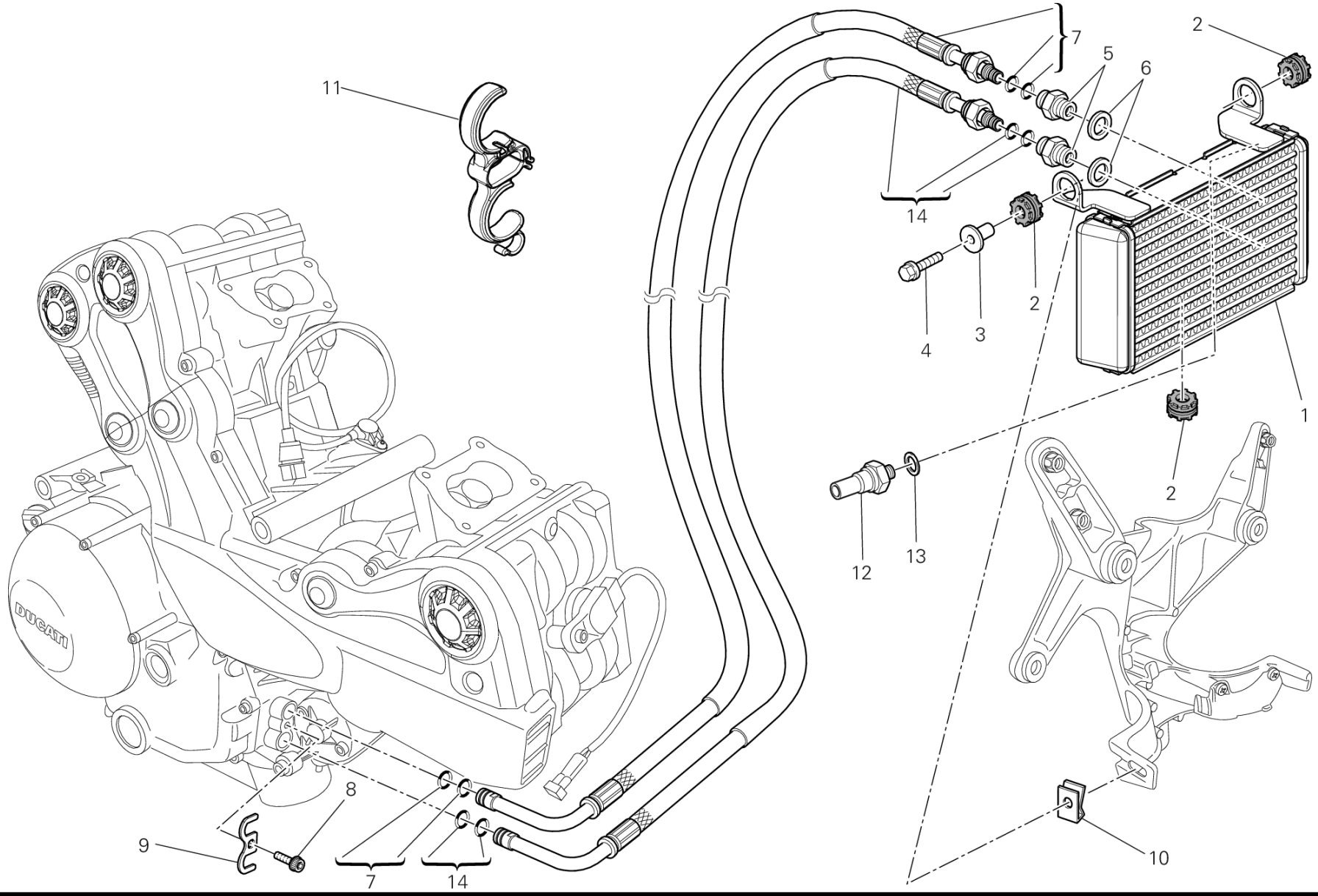
11
7
5
6
2
14
4
3
2
1
2
12
13
10
9
8
7
14

POS.	CODE	DESCRIPTION	QTY	START DATE	END DATE	VALIDITY	NOTES
1	54840871B	OIL COOLER	1	09/03/2012		MOD:MS1200-A;XST:AUS,CHN,EUR,FRA,JAP,THAI	
2	76410241A	VIBRATION DAMPER PAD	3	09/03/2012		MOD:MS1200-A;XST:AUS,CHN,EUR,FRA,JAP,THAI	
3	71610031A	SPACER	1	09/03/2012		MOD:MS1200-A;XST:AUS,CHN,EUR,FRA,JAP,THAI	
4	77251038B	SCREW TEF M6X25	1	09/03/2012		MOD:MS1200-A;XST:AUS,CHN,EUR,FRA,JAP,THAI	
5	81510221A	NIPPLE, HOSEM14X1.5	2	09/03/2012		MOD:MS1200-A;XST:AUS,CHN,EUR,FRA,JAP,THAI	
6	42020064A	ALUMINIUM GASKET	2	09/03/2012		MOD:MS1200-A;XST:AUS,CHN,EUR,FRA,JAP,THAI	
7	54910952A	OIL DELIVERY PIPE	1	09/03/2012		MOD:MS1200-A;XST:AUS,CHN,EUR,FRA,JAP,THAI	
8	77116648B	SCREW	1			MOD:MS1200-A;XST:AUS,CHN,EUR,FRA,JAP,THAI	
9	82715481A	PLATE	1	09/03/2012		MOD:MS1200-A;XST:AUS,CHN,EUR,FRA,JAP,THAI	
10	85040381A	QUICK FASTENING	1	09/03/2012		MOD:MS1200-A;XST:AUS,CHN,EUR,FRA,JAP,THAI	
11	85012162A	HOSE GUIDE	1	09/03/2012		MOD:MS1200-A;XST:AUS,CHN,EUR,FRA,JAP,THAI	
12	53940302A	SWITCH ASSY, OIL PRESSURE	1	09/03/2012		MOD:MS1200-A;XST:AUS,CHN,EUR,FRA,JAP,THAI	
13	85211951A	GASKET 10.5X17X2	1	09/03/2012		MOD:MS1200-A;XST:AUS,CHN,EUR,FRA,JAP,THAI	
14	54911012A	PIPE	1	09/03/2012		MOD:MS1200-A;XST:AUS,CHN,EUR,FRA,JAP,THAI	

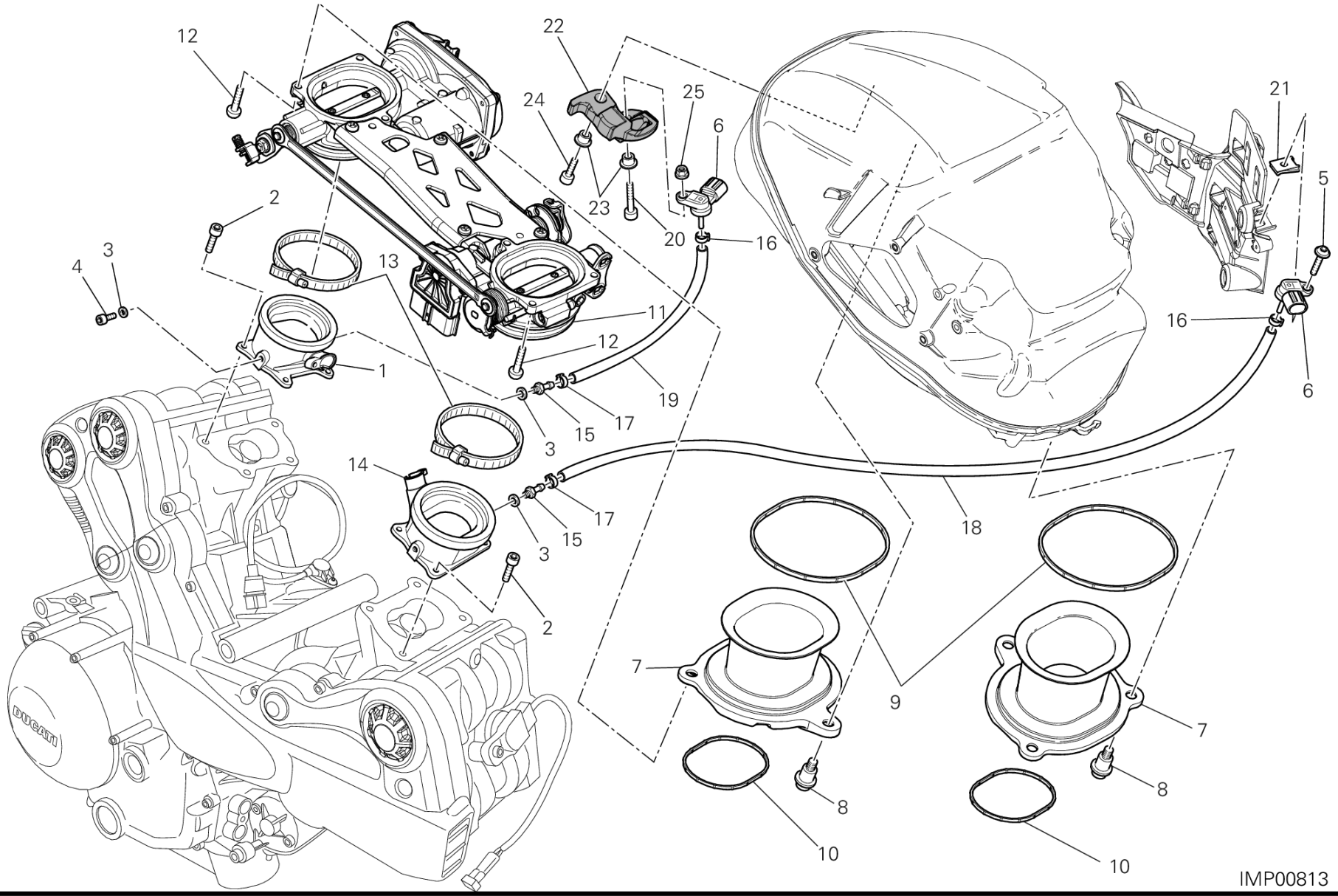
12
22
24
25
6
21
5
2
23
20
16
4
3
13
11
12
1
19
17
15
3
14
17
15
3
2
18
7
9
7
8
8
10
10
16
6
IMP00813

DRAWING 017 - THROTTLE BODY [MOD:MS1200-A;XST:AUS,EUR,FRA,JAP]

GROUP ENGINE

POS.	CODE	DESCRIPTION	QTY	START DATE	END DATE	VALIDITY	NOTES
1	14010731A	INTAKE MANIFOLD	1	29/06/2012		MOD:MS1200-A;XST:AUS,EUR,FRA,JAP	
2	77112331A	SCREW TCEI M6X16	8	29/06/2012		MOD:MS1200-A;XST:AUS,EUR,FRA,JAP	
3	85250231A	GASKET	4	03/04/2012		MOD:MS1200-A;XST:AUS,EUR,FRA,JAP	
4	77350618B	SCREW TCEIR M6X8	2	03/04/2012		MOD:MS1200-A;XST:AUS,EUR,FRA,JAP	
5	77240438C	SCREW TBEIF M6X18	1	09/03/2012		MOD:MS1200-A;XST:AUS,EUR,FRA,JAP	
6	55241571A	SENSOR, PRESSURE	2	09/03/2012		MOD:MS1200-A;XST:AUS,EUR,FRA,JAP	
7	13510352B	AIR FUNNEL	2	09/03/2012		MOD:MS1200-A;XST:AUS,EUR,FRA,JAP	
8	77210853B	SCREW TCEI M5X9	6	09/03/2012		MOD:MS1200-A;XST:AUS,EUR,FRA,JAP	
9	78810962A	GASKET AIR FUNNEL	2	09/03/2012		MOD:MS1200-A;XST:AUS,EUR,FRA,JAP	
10	78810971A	GASKET	2	09/03/2012		MOD:MS1200-A;XST:AUS,EUR,FRA,JAP	
11	28240911A	COMPLETE THROTTLE BODY	1	09/03/2012		MOD:MS1200-A;XST:AUS,EUR,FRA,JAP	
12	77510171C	SCREW TBEI M5X16	6	09/03/2012		MOD:MS1200-A;XST:AUS,EUR,FRA,JAP	
13	74141871A	CLAMP 60-80 MM	2	09/03/2012		MOD:MS1200-A;XST:AUS,EUR,FRA,JAP	
14	14010751A	INTAKE MANIFOLD	1	29/06/2012		MOD:MS1200-A;XST:AUS,EUR,FRA,JAP	
15	81413341A	UNION	2	29/06/2012		MOD:MS1200-A;XST:AUS,EUR,FRA,JAP	
16	74141711A	CLAMP 10-7 MM	2	09/03/2012		MOD:MS1200-A;XST:AUS,EUR,FRA,JAP	
17	74140581A	CLAMP	2	09/03/2012		MOD:MS1200-A;XST:AUS,EUR,FRA,JAP	

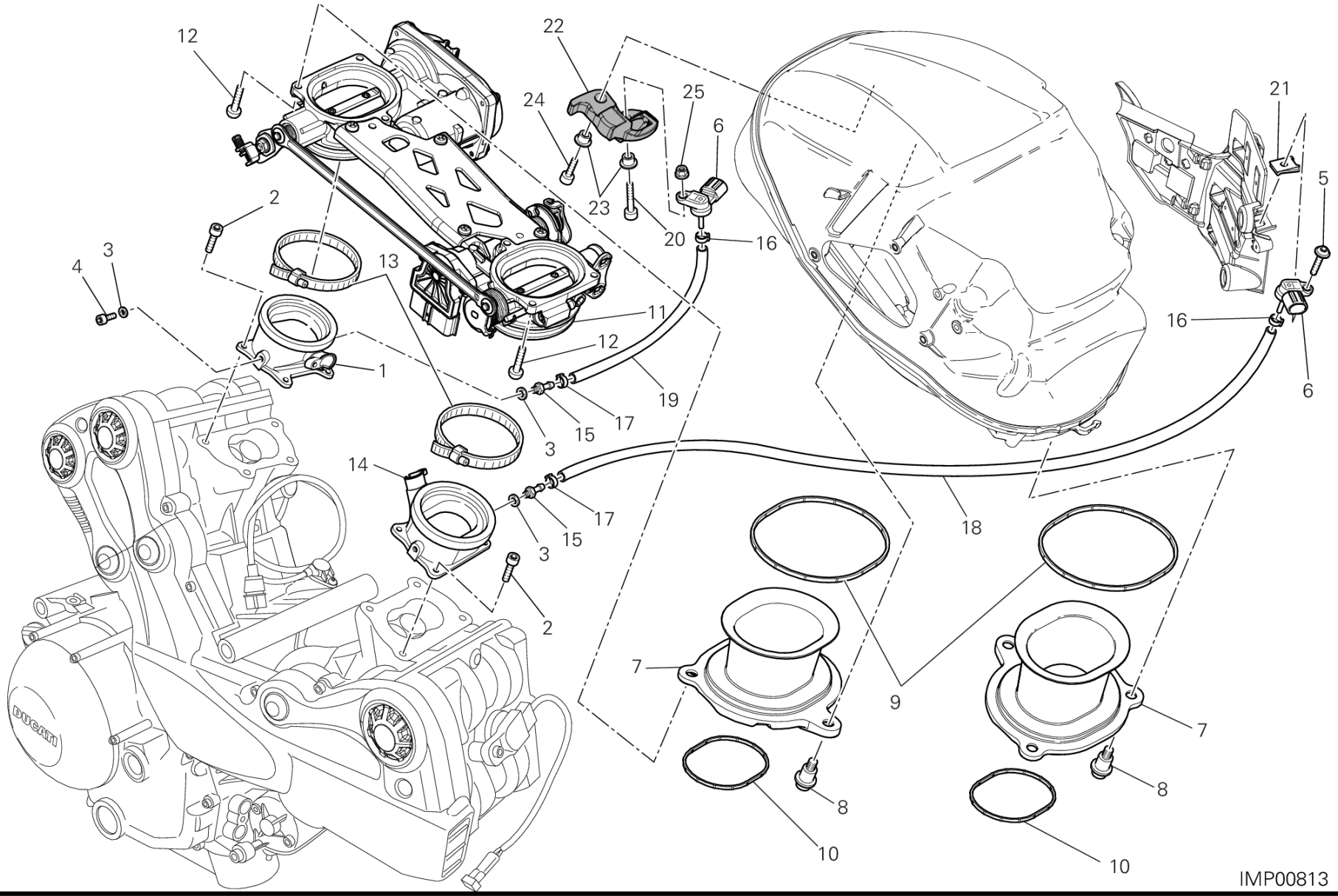
12
22
24
25
6
21
5
2
23
20
16
4
3
13
11
12
1
19
17
15
3
14
17
15
3
2
18
7
9
7
8
8
10
10
16
6
IMP00813

POS.	CODE	DESCRIPTION	QTY	START DATE	END DATE	VALIDITY	NOTES
18	59013101B	PIPE	1	09/03/2012		MOD:MS1200-A;XST:AUS,EUR,FRA,JAP	
19	59013661A	PIPE	1	09/03/2012		MOD:MS1200-A;XST:AUS,EUR,FRA,JAP	
20	77156718B	SCREW TCEIF M6X30	1	09/03/2012		MOD:MS1200-A;XST:AUS,EUR,FRA,JAP	
21	85040381A	QUICK FASTENING	1	09/03/2012		MOD:MS1200-A;XST:AUS,EUR,FRA,JAP	
22	86611292A	RUBBER PAD	1	09/03/2012		MOD:MS1200-A;XST:AUS,EUR,FRA,JAP	
23	71614261A	SPACER	2	09/03/2012		MOD:MS1200-A;XST:AUS,EUR,FRA,JAP	
24	77156678B	SCREW TCEIF M6X20	1	09/03/2012		MOD:MS1200-A;XST:AUS,EUR,FRA,JAP	
25	74810361A	NUT 6MM	1	09/03/2012		MOD:MS1200-A;XST:AUS,EUR,FRA,JAP	

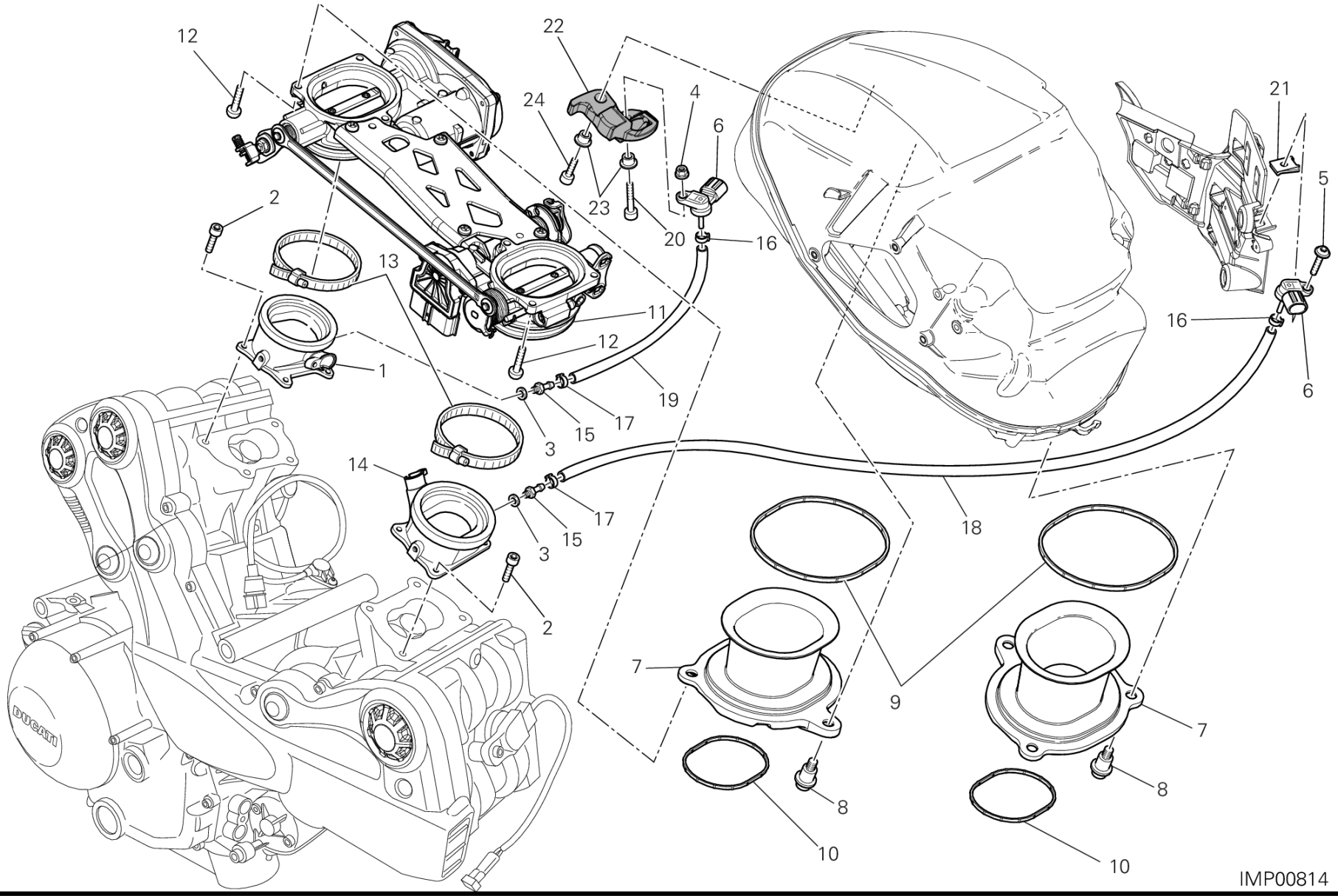
12
22
24
4
6
21
5
2
23
20
16
13
11
12
1
19
17
15
3
14
17
15
3
2
18
7
9
7
8
8
10
10
16
6
IMP00814

DRAWING 017 - THROTTLE BODY [MOD:MS1200-A;XST:CHN,THAI]

GROUP ENGINE

POS.	CODE	DESCRIPTION	QTY	START DATE	END DATE	VALIDITY	NOTES
1	14010731A	INTAKE MANIFOLD	1	29/06/2012		MOD:MS1200-A;XST:CHN,THAI	
2	77112331A	SCREW TCEI M6X16	8	29/06/2012		MOD:MS1200-A;XST:CHN,THAI	
3	85250231A	GASKET	2	03/04/2012		MOD:MS1200-A;XST:CHN,THAI	
4	74810361A	NUT 6MM	1	09/03/2012		MOD:MS1200-A;XST:CHN,THAI	
5	77240438C	SCREW TBEIF M6X18	1	09/03/2012		MOD:MS1200-A;XST:CHN,THAI	
6	55241571A	SENSOR, PRESSURE	2	09/03/2012		MOD:MS1200-A;XST:CHN,THAI	
7	13510352B	AIR FUNNEL	2	09/03/2012		MOD:MS1200-A;XST:CHN,THAI	
8	77210853B	SCREW TCEI M5X9	6	09/03/2012		MOD:MS1200-A;XST:CHN,THAI	
9	78810962A	GASKET AIR FUNNEL	2	09/03/2012		MOD:MS1200-A;XST:CHN,THAI	
10	78810971A	GASKET	2	09/03/2012		MOD:MS1200-A;XST:CHN,THAI	
11	28240911A	COMPLETE THROTTLE BODY	1	09/03/2012		MOD:MS1200-A;XST:CHN,THAI	
12	77510171C	SCREW TBEI M5X16	6	09/03/2012		MOD:MS1200-A;XST:CHN,THAI	
13	74141871A	CLAMP 60-80 MM	2	09/03/2012		MOD:MS1200-A;XST:CHN,THAI	
14	14010751A	INTAKE MANIFOLD	1	29/06/2012		MOD:MS1200-A;XST:CHN,THAI	
15	81413341A	UNION	2	29/06/2012		MOD:MS1200-A;XST:CHN,THAI	
16	74141711A	CLAMP 10-7 MM	2	09/03/2012		MOD:MS1200-A;XST:CHN,THAI	
17	74140581A	CLAMP	2	09/03/2012		MOD:MS1200-A;XST:CHN,THAI	
18	59013101B	PIPE	1	09/03/2012		MOD:MS1200-A;XST:CHN,THAI	
19	59013661A	PIPE	1	09/03/2012		MOD:MS1200-A;XST:CHN,THAI	
20	77156718B	SCREW TCEIF M6X30	1	09/03/2012		MOD:MS1200-A;XST:CHN,THAI	
21	85040381A	QUICK FASTENING	1	09/03/2012		MOD:MS1200-A;XST:CHN,THAI	
22	86611292A	RUBBER PAD	1	09/03/2012		MOD:MS1200-A;XST:CHN,THAI	
23	71614261A	SPACER	2	09/03/2012		MOD:MS1200-A;XST:CHN,THAI	
24	77156678B	SCREW TCEIF M6X20	1	09/03/2012		MOD:MS1200-A;XST:CHN,THAI	

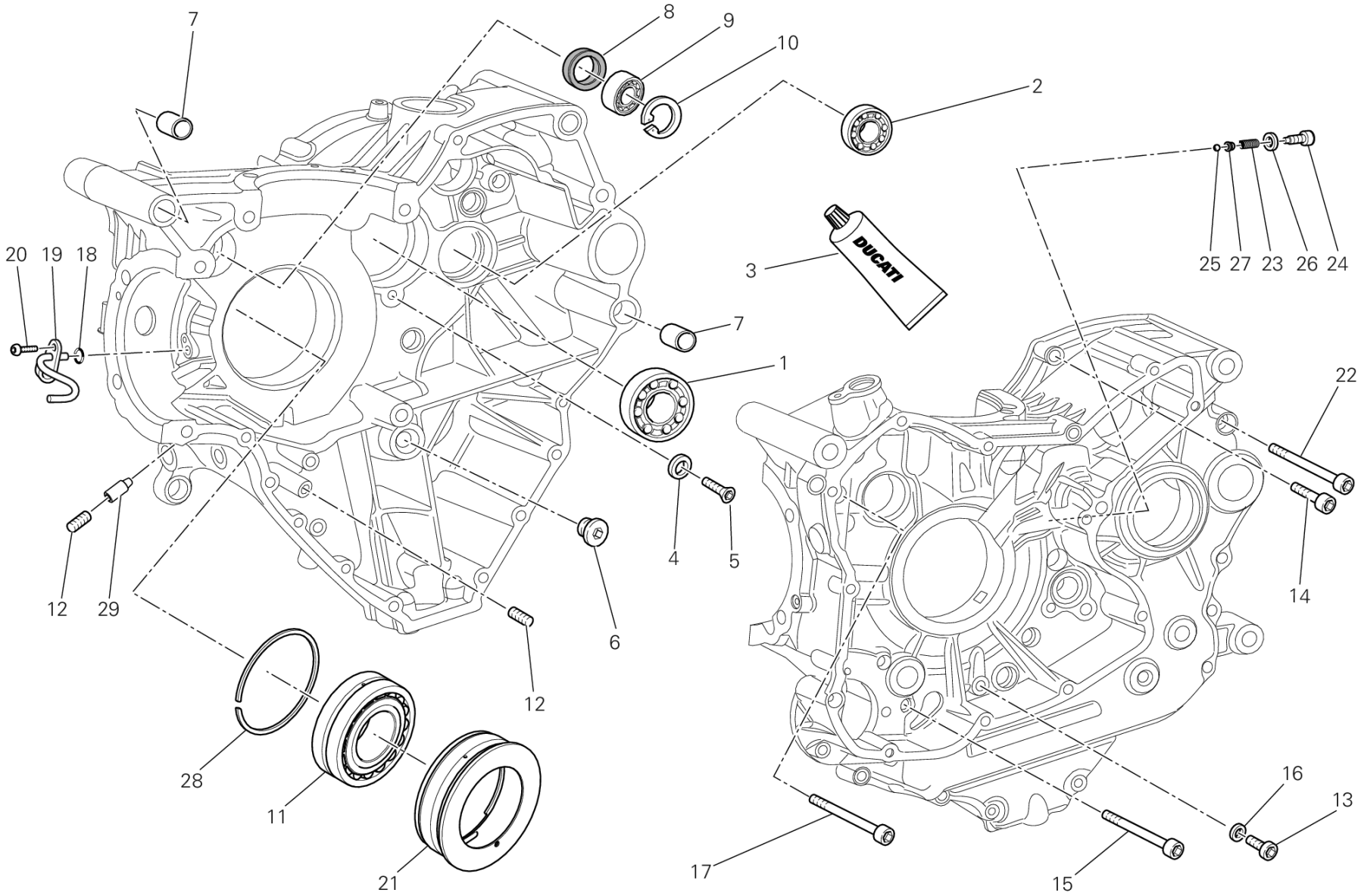
7
8
9
10
2
3
DUCATI
25 27 23 26 24
20 19 18
7
1
22
12 29
4 5
6
14
12
28
11
21
16
13
17
15
CRT00593

DRAWING 10A - CRANKCASE BEARINGS [MOD:MS1200-A;XST:AUS,CHN,EUR,FRA,JAP,THAI]

GROUP ENGINE

POS.	CODE	DESCRIPTION	QTY	START DATE	END DATE	VALIDITY	NOTES
1	70250193A	BEARING	1	12/03/2012		MOD:MS1200-A;XST:AUS,CHN,EUR,FRA,JAP,THAI	
2	70240331A	BEARING 17X40X12	2	12/03/2012		MOD:MS1200-A;XST:AUS,CHN,EUR,FRA,JAP,THAI	
3	942470014	LIQUID GASKET	1	28/09/2011		MOD:MS1200-A;XST:AUS,CHN,EUR,FRA,JAP,THAI	
4	85611481A	WASHER	2	12/03/2012		MOD:MS1200-A;XST:AUS,CHN,EUR,FRA,JAP,THAI	
5	720941616	SCREW TSPEI M6X12	2	12/03/2012		MOD:MS1200-A;XST:AUS,CHN,EUR,FRA,JAP,THAI	
6	78010721A	PLUG BY-PASS M16X1.5	1	12/03/2012		MOD:MS1200-A;XST:AUS,CHN,EUR,FRA,JAP,THAI	
7	71110951A	PIN DOWEL	2	01/01/2011		MOD:MS1200-A;XST:AUS,CHN,EUR,FRA,JAP,THAI	
8	93041231A	SEAL, OIL 18X30X6	1	12/03/2012		MOD:MS1200-A;XST:AUS,CHN,EUR,FRA,JAP,THAI	
9	757941542	BEARING	1	12/03/2012		MOD:MS1200-A;XST:AUS,CHN,EUR,FRA,JAP,THAI	
10	735033380	CIRCLIP	1	12/03/2012		MOD:MS1200-A;XST:AUS,CHN,EUR,FRA,JAP,THAI	
11	70241151A	BEARING	1	12/03/2012		MOD:MS1200-A;XST:AUS,CHN,EUR,FRA,JAP,THAI	
12	77950621A	THREADED DOWEL M10X1	2	12/03/2012		MOD:MS1200-A;XST:AUS,CHN,EUR,FRA,JAP,THAI	
13	77350618B	SCREW TCEIR M6X8	1	12/03/2012		MOD:MS1200-A;XST:AUS,CHN,EUR,FRA,JAP,THAI	
14	77150723B	SCREW TCEI M6X35 UNI 5931	8	28/09/2011		MOD:MS1200-A;XST:AUS,CHN,EUR,FRA,JAP,THAI	
15	77150808B	SCREW TCEI M6X75	2	28/09/2011		MOD:MS1200-A;XST:AUS,CHN,EUR,FRA,JAP,THAI	
16	85250231A	GASKET	1	12/03/2012		MOD:MS1200-A;XST:AUS,CHN,EUR,FRA,JAP,THAI	
17	77151398B	SCREW TCEI M8X90	2	28/09/2011		MOD:MS1200-A;XST:AUS,CHN,EUR,FRA,JAP,THAI	

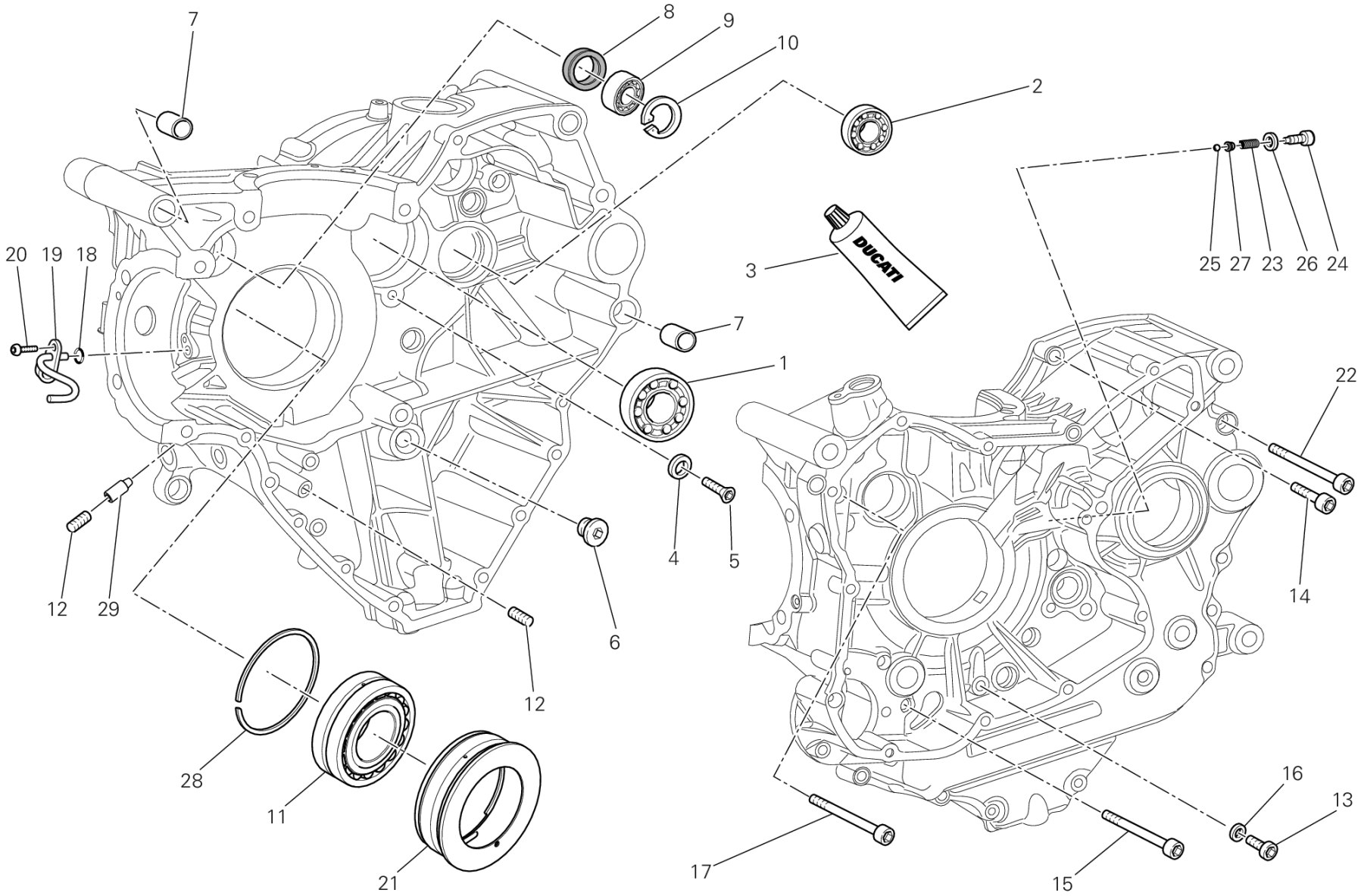
7
8
9
10
2
3
DUCATI
25 27 23 26 24
20 19 18
7
1
22
12 29
4 5
6
14
12
28
11
21
16
13
17
15
CRT00593

POS.	CODE	DESCRIPTION	QTY	START DATE	END DATE	VALIDITY	NOTES
18	88650131A	O-RING 3.68X1.78	1	12/03/2012		MOD:MS1200-A;XST:AUS,CHN,EUR,FRA,JAP,THAI	
19	87511461B	JET	1	12/03/2012		MOD:MS1200-A;XST:AUS,CHN,EUR,FRA,JAP,THAI	
20	77510311B	SCREW TBEI M5X10	1	12/03/2012		MOD:MS1200-A;XST:AUS,CHN,EUR,FRA,JAP,THAI	
21	710Z0041A	BUSHING	1	12/03/2012		MOD:MS1200-A;XST:AUS,CHN,EUR,FRA,JAP,THAI	
22	77151363B	SCREW TCEI M8X75 UNI 5931	3	28/09/2011		MOD:MS1200-A;XST:AUS,CHN,EUR,FRA,JAP,THAI	
23	79940121A	SPRING	1	12/03/2012		MOD:MS1200-A;XST:AUS,CHN,EUR,FRA,JAP,THAI	
24	77916501AD	SCREW, SPECIAL	1	12/03/2012		MOD:MS1200-A;XST:AUS,CHN,EUR,FRA,JAP,THAI	
25	84740061A	BALL	1	12/03/2012		MOD:MS1200-A;XST:AUS,CHN,EUR,FRA,JAP,THAI	
26	85212461A	WASHER, BRASS 6X13X2 MM	1	12/03/2012		MOD:MS1200-A;XST:AUS,CHN,EUR,FRA,JAP,THAI	
27	83110151A	PLATE	1	12/03/2012		MOD:MS1200-A;XST:AUS,CHN,EUR,FRA,JAP,THAI	
28	88450581A	SPRING RING	1	12/03/2012		MOD:MS1200-A;XST:AUS,CHN,EUR,FRA,JAP,THAI	
29	77917101A	SCREW, SPECIAL	1	12/03/2012		MOD:MS1200-A;XST:AUS,CHN,EUR,FRA,JAP,THAI	

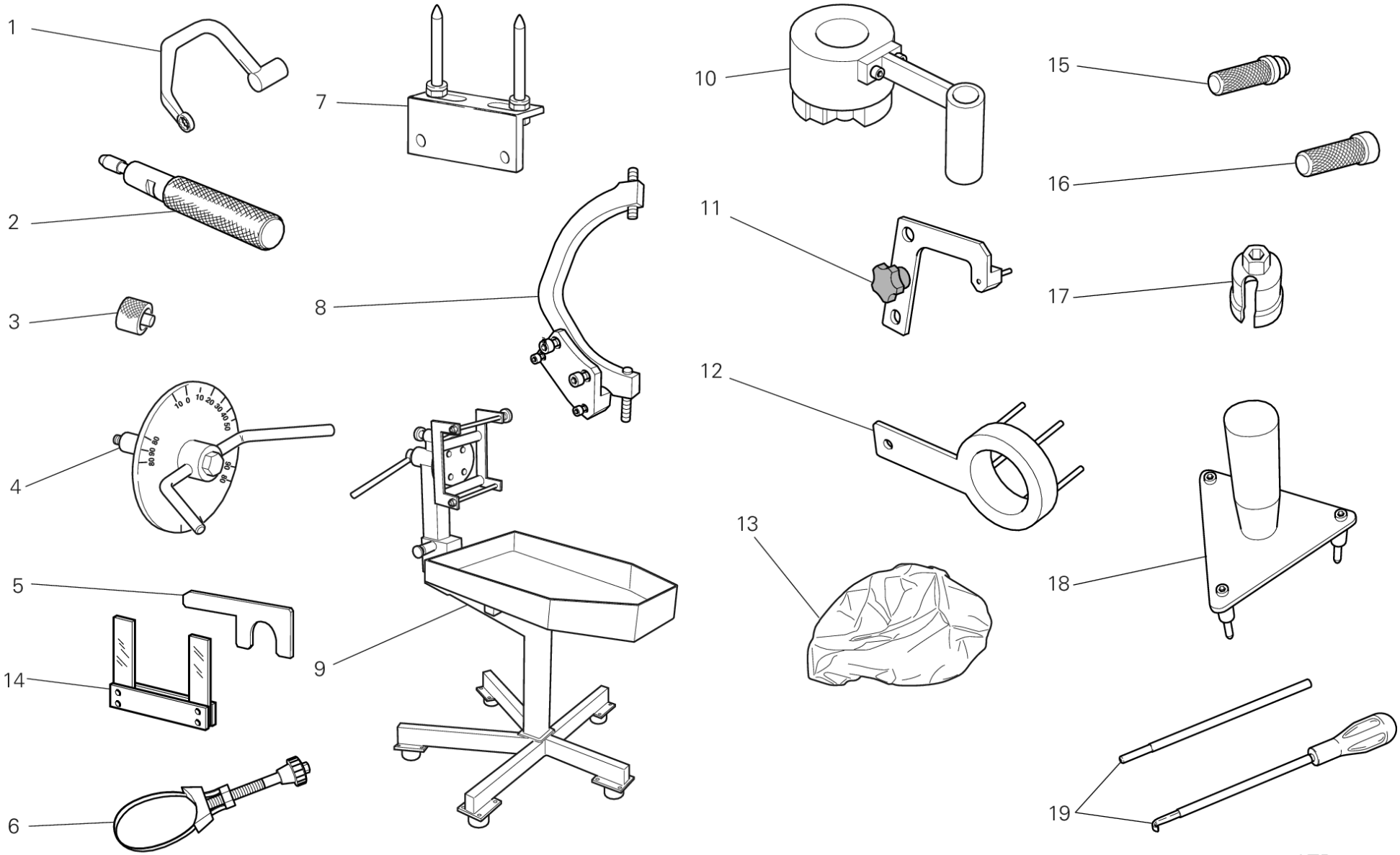
1
2
3
4
5
14
6
7
8
9
10
11
12
13
15
16
17
18
19
ATR00287

POS.	CODE	DESCRIPTION	QTY	START DATE	END DATE	VALIDITY	NOTES
1	887132676	HEAD NUTS HOLDER WRENCH (M10)	1			MOD:MS1200-A;XST:AUS,CHN,EUR,FRA,JAP,THAI	
2	887132442	TOOL, OIL SEAL MOUNTING (Ø7)	1			MOD:MS1200-A;XST:AUS,CHN,EUR,FRA,JAP,THAI	
3	887651298	SPACER FOR CHECKING LOWER VALVE SHIM	1			MOD:MS1200-A;XST:AUS,CHN,EUR,FRA,JAP,THAI	
4	887651657	DEGREE WHEEL HOLDER TOOL	1			MOD:MS1200-A;XST:AUS,CHN,EUR,FRA,JAP,THAI	
5	887132878	SPACER AND FORK FEELER GAUGE 0.2/0.3 MM	1			MOD:MS1200-A;XST:AUS,CHN,EUR,FRA,JAP,THAI	
6	887132906	WRENCH, OIL FILTER CARTRIDGE	1			MOD:MS1200-A;XST:AUS,CHN,EUR,FRA,JAP,THAI	
7	887132103	HEAD MOUNTING BASE	1			MOD:MS1200-A;XST:AUS,CHN,EUR,FRA,JAP,THAI	
8	887133367	FLYWHEEL WRENCH	1			MOD:MS1200-A;XST:AUS,CHN,EUR,FRA,JAP,THAI	
9	887131832	BENCH FOR ENGINE REPAIR	1			MOD:MS1200-A;XST:AUS,CHN,EUR,FRA,JAP,THAI	
10	887133408	REACTION TOOL FOR WET "FCC" CLUTCH	1			MOD:MS1200-A;XST:AUS,CHN,EUR,FRA,JAP,THAI	
11	887133334	PLATE POSITIONING GEAR ENGAGEMENT FORK	1			MOD:MS1200-A;XST:AUS,CHN,EUR,FRA,JAP,THAI	
12	887133417	TORQUE WRENCH	1			MOD:MS1200-A;XST:AUS,CHN,EUR,FRA,JAP,THAI	
13	887131886	ENGINE CANVAS	1			MOD:MS1200-A;XST:AUS,CHN,EUR,FRA,JAP,THAI	
14	887651000	FORK FEELER GAUGE 0.1 MM	1			MOD:MS1200-A;XST:AUS,CHN,EUR,FRA,JAP,THAI	
	887651005	FORK FEELER GAUGE 0.2 MM	1			MOD:MS1200-A;XST:AUS,CHN,EUR,FRA,JAP,THAI	
	887651006	FORK FEELER GAUGE 0.3 MM	1			MOD:MS1200-A;XST:AUS,CHN,EUR,FRA,JAP,THAI	
15	887130869	TOOL, WATER PUMP FRONT SEAL ASSEMBLING	1			MOD:MS1200-A;XST:AUS,CHN,EUR,FRA,JAP,THAI	

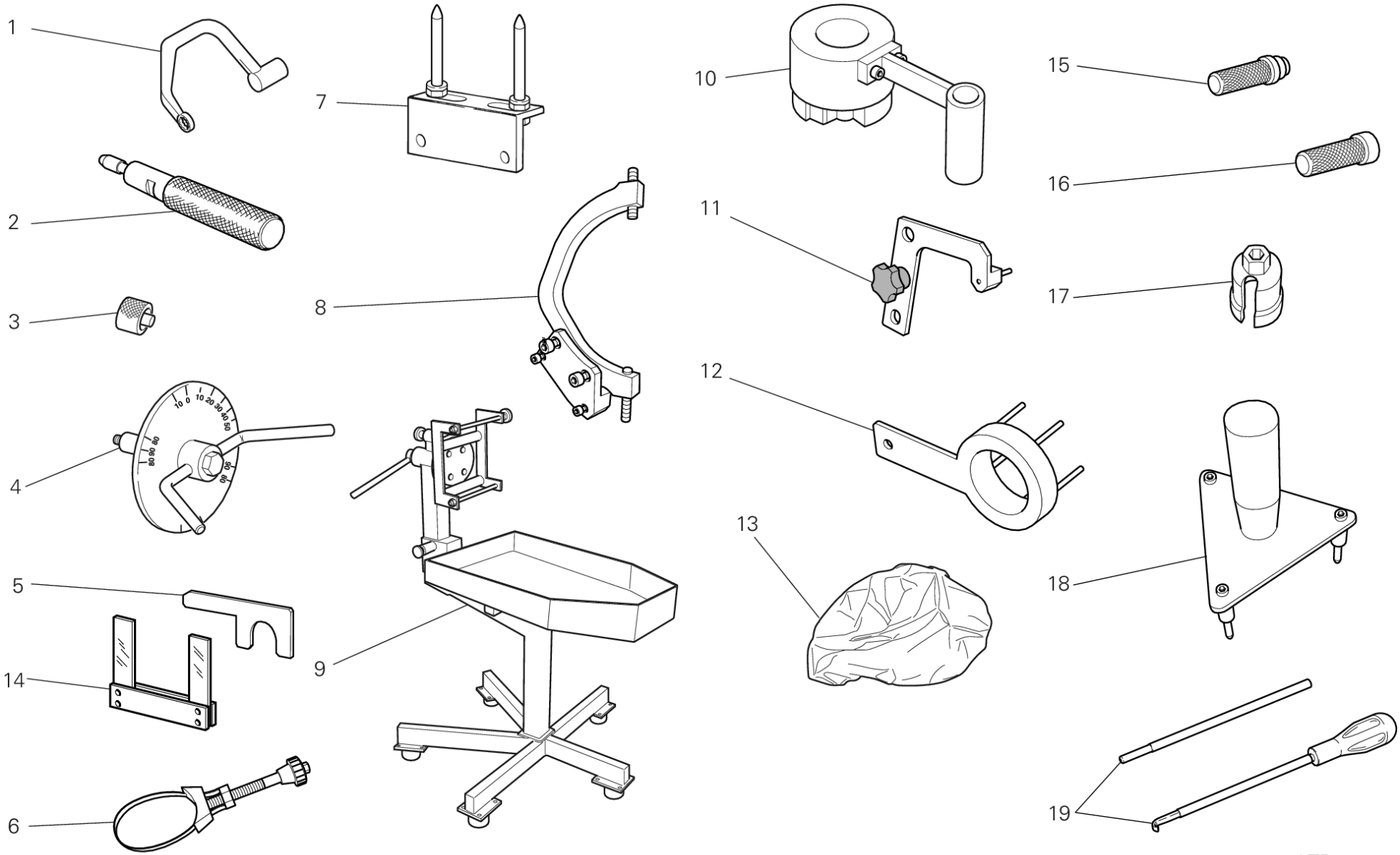
1
2
3
4
5
14
6
7
8
9
10
11
12
13
15
16
17
18
19
ATR00287

POS.	CODE	DESCRIPTION	QTY	START DATE	END DATE	VALIDITY	NOTES
16	887130870	TOOL ASSEMBLING WATER PUMP FRONT SEAL	1			MOD:MS1200-A;XST:AUS,CHN,EUR,FRA,JAP,THAI	
17	887133407	SPINDLE, TAPER (Gearbox position sensor)	1			MOD:MS1200-A;XST:AUS,CHN,EUR,FRA,JAP,THAI	
18	887133352	TOOL FOR TIMING CLUTCH PLATES SET	1			MOD:MS1200-A;XST:AUS,CHN,EUR,FRA,JAP,THAI	
19	887132069	ROCKER SPRING PRE-LOAD COMPOUND KIT	1			MOD:MS1200-A;XST:AUS,CHN,EUR,FRA,JAP,THAI	

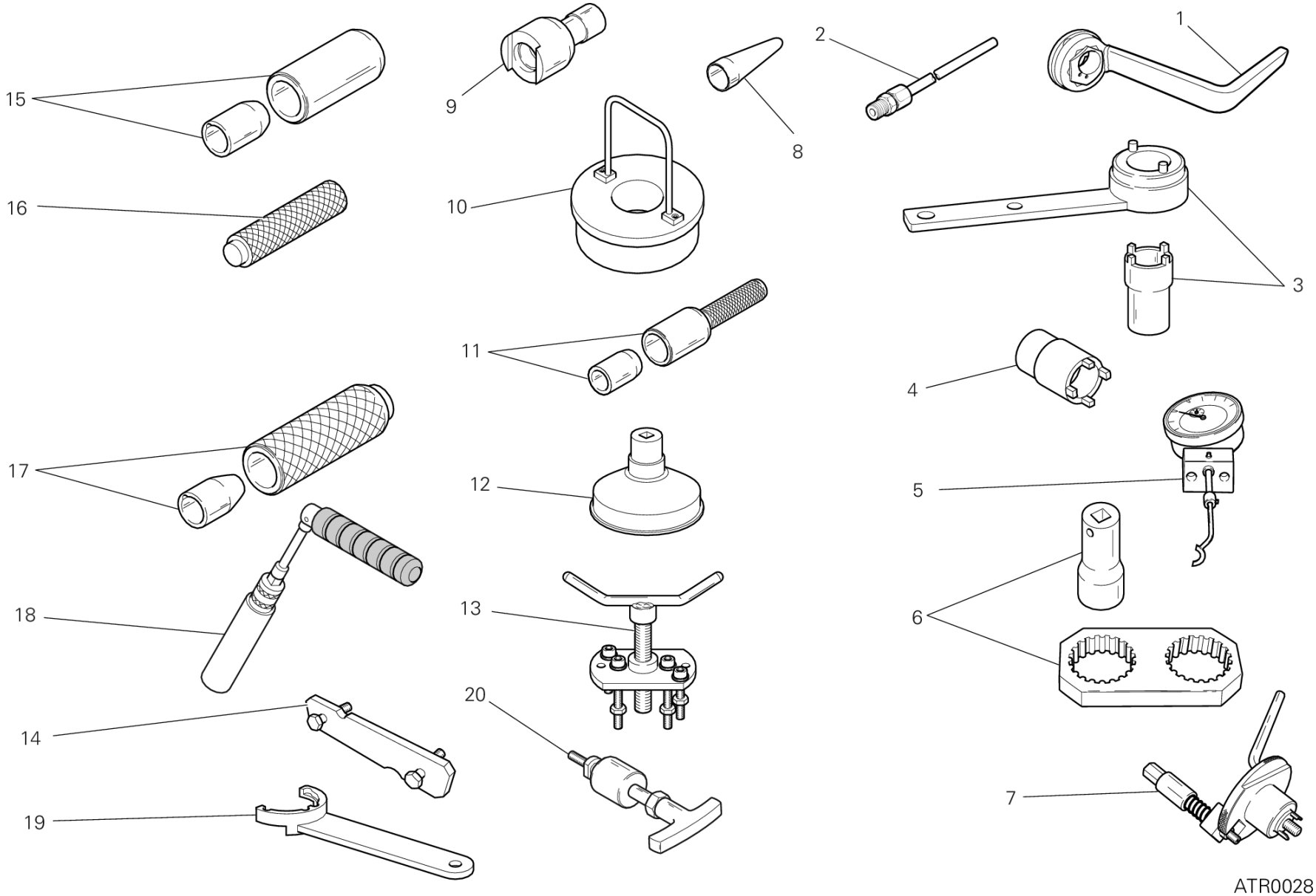
1
2
3
4
5
6
7
8
9
10
11
12
13
14
15
16
17
18
19
20
ATR00281

DRAWING 01A - WORKSHOP SERVICE TOOLS [MOD:MS1200-A;XST:AUS,CHN,EUR,FRA,JAP,THAI]

GROUP TOOLS

POS.	CODE	DESCRIPTION	QTY	START DATE	END DATE	VALIDITY	NOTES
1	887133497	WRENCH FOR TENSIONING MOBILE BELT TENSIO	1			MOD:MS1200-A;XST:AUS,CHN,EUR,FRA,JAP,THAI	
2	887131010	CONNECTOR FOR EXHAUST GAS TAKE-UP POINT	1			MOD:MS1200-A;XST:AUS,CHN,EUR,FRA,JAP,THAI	
3	887131805	DRIVING ROLLER TIGHTENING TOOL	1			MOD:MS1200-A;XST:AUS,CHN,EUR,FRA,JAP,THAI	
4	887133406	WRENCH TIGHTENING PRIMARY TRANSMISSI	1			MOD:MS1200-A;XST:AUS,CHN,EUR,FRA,JAP,THAI	
5	887651518	VALVE LIFT GAUGE	1			MOD:MS1200-A;XST:AUS,CHN,EUR,FRA,JAP,THAI	
6	887131806	REACTION TOOL BELT ROLLER TIGHTENING	1			MOD:MS1200-A;XST:AUS,CHN,EUR,FRA,JAP,THAI	
7	887132011	CRANKSHAFT RESET TOOL	1			MOD:MS1200-A;XST:AUS,CHN,EUR,FRA,JAP,THAI	
8	887131920	TOOL TO FIT O-RINGS ONTO STUD BOLTS	1			MOD:MS1200-A;XST:AUS,CHN,EUR,FRA,JAP,THAI	
9	887131821	WRENCH TO TIGHTEN TENSIONING BOLTS	1			MOD:MS1200-A;XST:AUS,CHN,EUR,FRA,JAP,THAI	
10	887132870	TOOL, CON-ROD GUIDING	1			MOD:MS1200-A;XST:AUS,CHN,EUR,FRA,JAP,THAI	
11	887133521	PUNCH TOOL DRIVING SEAL RING	1			MOD:MS1200-A;XST:AUS,CHN,EUR,FRA,JAP,THAI	
12	887130944	WRENCH TO TIGHTEN OIL FILTER CARTRIDGE	1			MOD:MS1200-A;XST:AUS,CHN,EUR,FRA,JAP,THAI	
13	887131749	DRIVE ROLLER PULLER	1			MOD:MS1200-A;XST:AUS,CHN,EUR,FRA,JAP,THAI	
14	887651623	BELT ROLLER TIMING TOOL	1			MOD:MS1200-A;XST:AUS,CHN,EUR,FRA,JAP,THAI	
15	887132861	TOOL TO FIT SEALS ON CAMSHAFTS	1			MOD:MS1200-A;XST:AUS,CHN,EUR,FRA,JAP,THAI	
16	887131980	DRIFT TO DRIVE RETAINERS ONTO SHAFTS	1			MOD:MS1200-A;XST:AUS,CHN,EUR,FRA,JAP,THAI	
17	887132834	TOOL SNAP RING INSTALLATION	1			MOD:MS1200-A;XST:AUS,CHN,EUR,FRA,JAP,THAI	

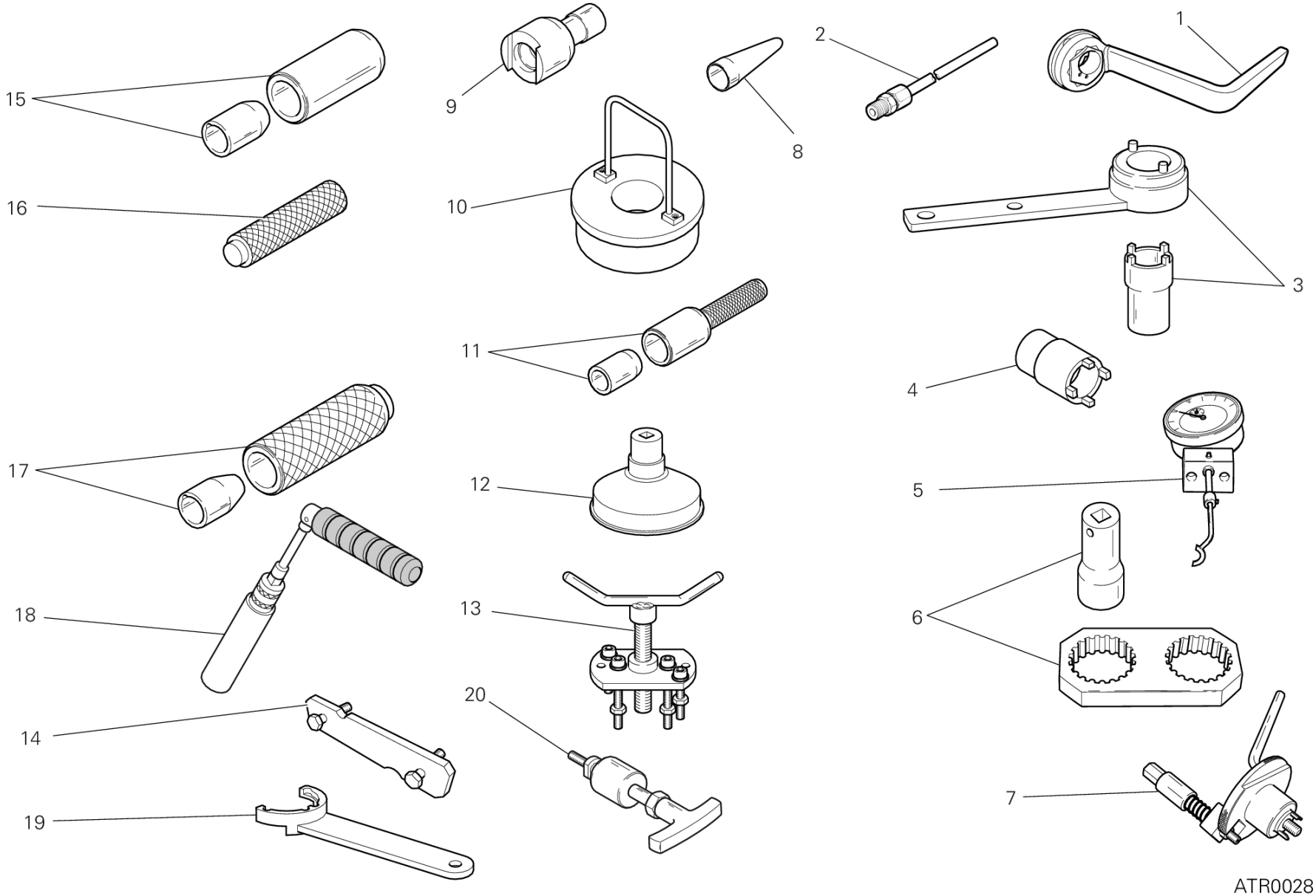
1
2
3
4
5
6
7
8
9
10
11
12
13
14
15
16
17
18
19
20
ATR00281

DRAWING 01A - WORKSHOP SERVICE TOOLS [MOD:MS1200-A;XST:AUS,CHN,EUR,FRA,JAP,THAI]

GROUP TOOLS

POS.	CODE	DESCRIPTION	QTY	START DATE	END DATE	VALIDITY	NOTES
18	887132877	SPARK PLUG WRENCH	1			MOD:MS1200-A;XST:AUS,CHN,EUR,FRA,JAP,THAI	
19	887133219	TIMING BELT ROLLER REACTION TOOL	1			MOD:MS1200-A;XST:AUS,CHN,EUR,FRA,JAP,THAI	
20	887131994	ROCKER PIN EXTRACTOR	1			MOD:MS1200-A;XST:AUS,CHN,EUR,FRA,JAP,THAI	

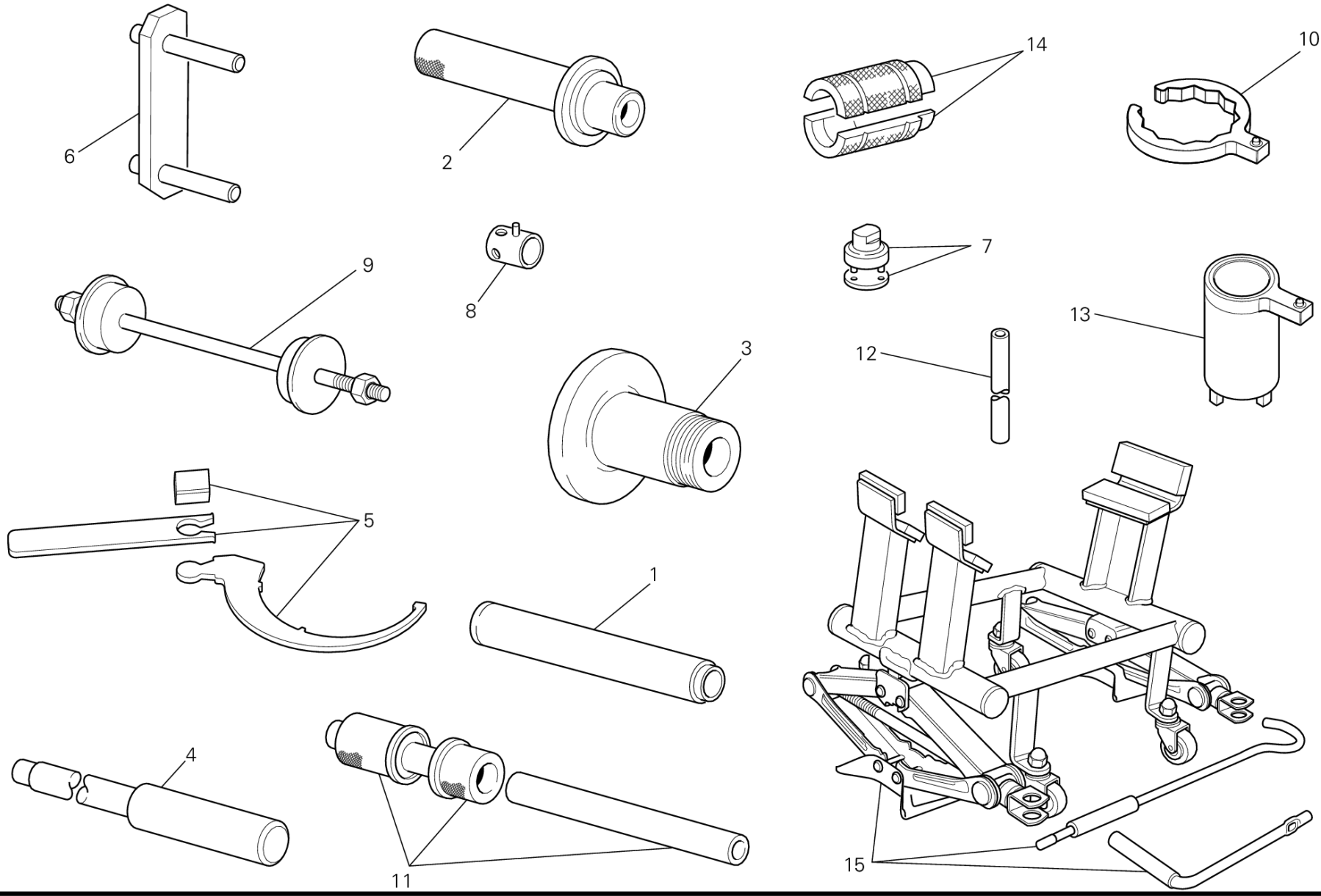
6
2
14
10
9
8
7
13
12
3
5
1
4
11
15

DRAWING 01B - WORKSHOP SERVICE TOOLS [MOD:MS1200-A;XST:AUS,CHN,EUR,FRA,JAP,THAI]

GROUP TOOLS

POS.	CODE	DESCRIPTION	QTY	START DATE	END DATE	VALIDITY	NOTES
1	887131072	DRIVING STOPPER FOR THE HALF BEARING	1			MOD:MS1200-A;XST:AUS,CHN,EUR,FRA,JAP,THAI	
2	887131068	STOPPER ASSEMBLING ROLLER BEARING	1			MOD:MS1200-A;XST:AUS,CHN,EUR,FRA,JAP,THAI	
3	887132951	TOOL BALANCING REAR WHEEL	1			MOD:MS1200-A;XST:AUS,CHN,EUR,FRA,JAP,THAI	
4	887131074	TOOL DISASSEMBLING SWINGARM PIVOT	1			MOD:MS1200-A;XST:AUS,CHN,EUR,FRA,JAP,THAI	
5	887133211	SPANNER FOR ADJUSTING THE ECCENTRIC HUB	1			MOD:MS1200-A;XST:AUS,CHN,EUR,FRA,JAP,THAI	
6	887131515	FRAME/MOTOR SUPPORT	1			MOD:MS1200-A;XST:AUS,CHN,EUR,FRA,JAP,THAI	
7	887131058	SPANNER TO ASSEMBLE THE STEERING SLEEVE	1			MOD:MS1200-A;XST:AUS,CHN,EUR,FRA,JAP,THAI	
8	800070139	WRENCH FOR FRONT WHEEL SPINDLE	1			MOD:MS1200-A;XST:AUS,CHN,EUR,FRA,JAP,THAI	
9	887131062	TOOL ASSEMBLING STEERING TUBE BEARING	1			MOD:MS1200-A;XST:AUS,CHN,EUR,FRA,JAP,THAI	
10	887133501	WRENCH TO TIGHTEN CAP TANK	1			MOD:MS1200-A;XST:AUS,CHN,EUR,FRA,JAP,THAI	
11	887132409	TOOL ASSEMBLING SWINGARM BALL BEARING	1			MOD:MS1200-A;XST:AUS,CHN,EUR,FRA,JAP,THAI	
12	887133203	DRAW BAR FOR MARZOCCHI FORKS OVERHAULING	1			MOD:MS1200-A;XST:AUS,CHN,EUR,FRA,JAP,THAI	
13	887133526	WRENCH FOR TIGHTENING FRAME RING NUT	1			MOD:MS1200-A;XST:AUS,CHN,EUR,FRA,JAP,THAI	
14	887133204	TOOL TO OVERHAUL MARZOCCHI FORKS	1			MOD:MS1200-A;XST:AUS,CHN,EUR,FRA,JAP,THAI	
15	887133396	BENCH FOR ENGINE REPAIR	1			MOD:MS1200-A;XST:AUS,CHN,EUR,FRA,JAP,THAI	

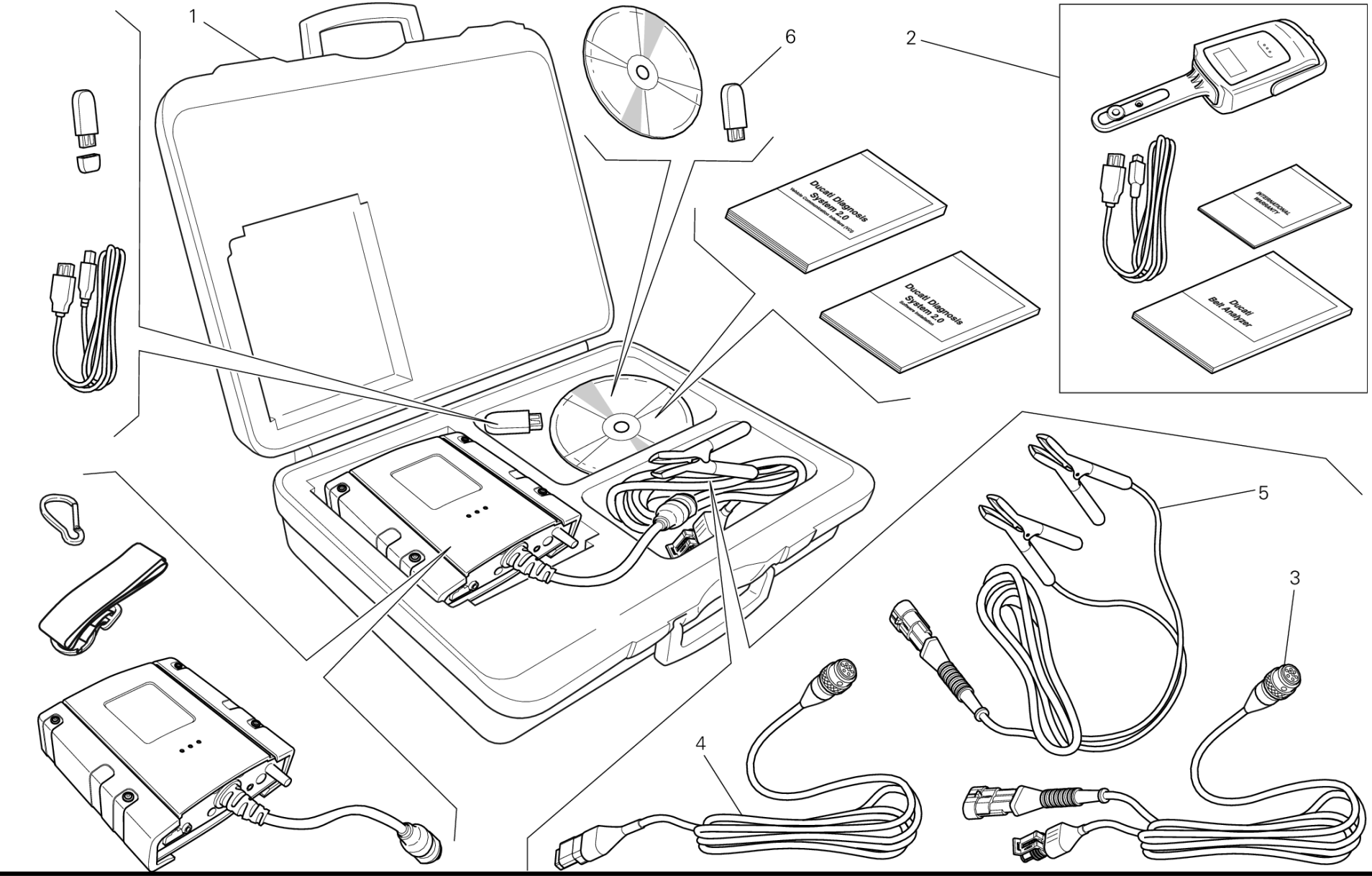
1
6
2
Ducati Diagnosis System 2.0
Ducati Diagnosis System 2.0
INTERNATIONAL WARRANTY
Ducati Belt Analyzer
5
3
4

POS.	CODE	DESCRIPTION	QTY	START DATE	END DATE	VALIDITY	NOTES
1	979000252	DDS 2 (Ducati Diagnosis System 2.0)	1			MOD:MS1200-A;XST:AUS,CHN,EUR,FRA,JAP,THAI	
2	979000253	BELT TENSIONING KIT	1			MOD:MS1200-A;XST:AUS,CHN,EUR,FRA,JAP,THAI	
3	979000254	MAIN CABLE	1			MOD:MS1200-A;XST:AUS,CHN,EUR,FRA,JAP,THAI	
4	979000255	MAIN CABLE (CAN)	1			MOD:MS1200-A;XST:AUS,CHN,EUR,FRA,JAP,THAI	
5	979000256	MAIN CABLE DDS	1			MOD:MS1200-A;XST:AUS,CHN,EUR,FRA,JAP,THAI	
6	28620441A	CHIAVE "PC HASP DDS2.0"	1			MOD:MS1200-A;XST:AUS,CHN,EUR,FRA,JAP,THAI	

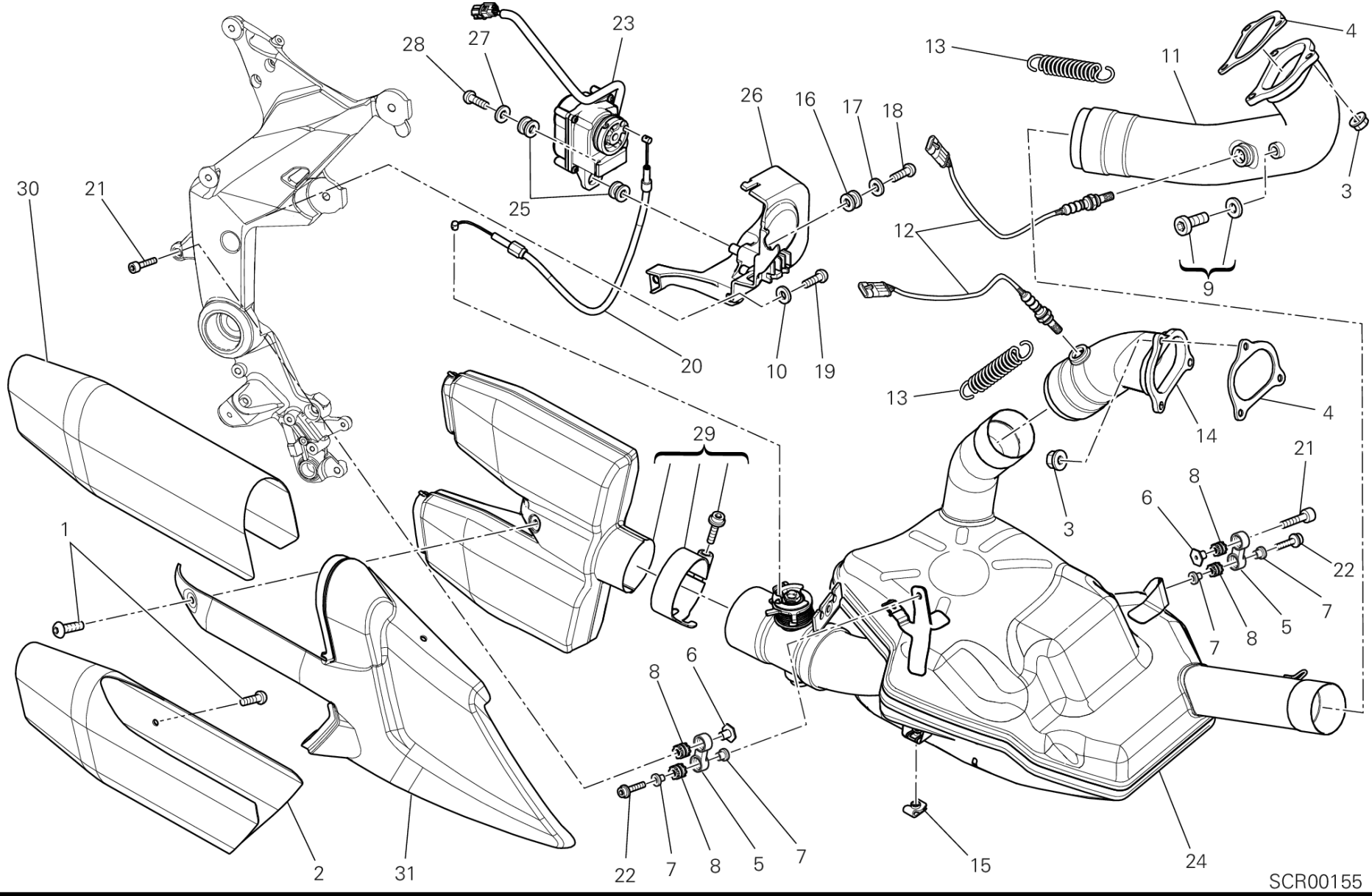
SCR00155

POS.	CODE	DESCRIPTION	QTY	START DATE	END DATE	VALIDITY	NOTES
1	77213173B	SCREW	7	09/03/2012	10/01/2013	MOD:MS1200-A;XST:AUS,CHN,EUR,FRA,JAP,THAI	
2	46013972C	GUARD, SILENCER LOWER	1	09/03/2012		MOD:MS1200-A;XST:AUS,CHN,EUR,FRA,JAP,THAI	
3	74810241A	NUT	6	09/03/2012		MOD:MS1200-A;XST:AUS,CHN,EUR,FRA,JAP,THAI	
4	79010211A	GASKET, EXHAUST PIPE	2	09/03/2012		MOD:MS1200-A;XST:AUS,CHN,EUR,FRA,JAP,THAI	
5	57610671A	BRACKET, SILENCER	2	01/04/2010		MOD:MS1200-A;XST:AUS,CHN,EUR,FRA,JAP,THAI	
6	71011491A	SPINDLE, TAPER	2	01/04/2010		MOD:MS1200-A;XST:AUS,CHN,EUR,FRA,JAP,THAI	
7	71614141A	SPACER	4			MOD:MS1200-A;XST:AUS,CHN,EUR,FRA,JAP,THAI	
8	76410241A	VIBRATION DAMPER PAD	4	01/04/2010		MOD:MS1200-A;XST:AUS,CHN,EUR,FRA,JAP,THAI	
9	78020011A	PLUG	2			MOD:MS1200-A;XST:AUS,CHN,EUR,FRA,JAP,THAI	
10	85211861A	WASHER 6.4X16X0.5	1	09/03/2012		MOD:MS1200-A;XST:AUS,CHN,EUR,FRA,JAP,THAI	
11	57012842A	HORIZONTAL EXHAUST PIPE	1	09/03/2012		MOD:MS1200-A;XST:AUS,CHN,EUR,FRA,JAP,THAI	
12	55212092A	SENSOR LAMBDA SOND	2	09/03/2012		MOD:MS1200-A;XST:AUS,CHN,EUR,FRA,JAP,THAI	
13	79910485A	SPRING EXHAUST , LONG	2	09/03/2012		MOD:MS1200-A;XST:AUS,CHN,EUR,FRA,JAP,THAI	
14	57112712C	VERTICAL EXHAUST PIPE	1	01/10/2012		MOD:MS1200-A;XST:AUS,CHN,EUR,FRA,JAP,THAI	
15	85040551A	QUICK FASTENING	5	09/03/2012		MOD:MS1200-A;XST:AUS,CHN,EUR,FRA,JAP,THAI	
16	76410901A	RUBBER PAD	1	09/03/2012		MOD:MS1200-A;XST:AUS,CHN,EUR,FRA,JAP,THAI	
17	71610221B	SPACER	1	09/03/2012		MOD:MS1200-A;XST:AUS,CHN,EUR,FRA,JAP,THAI	

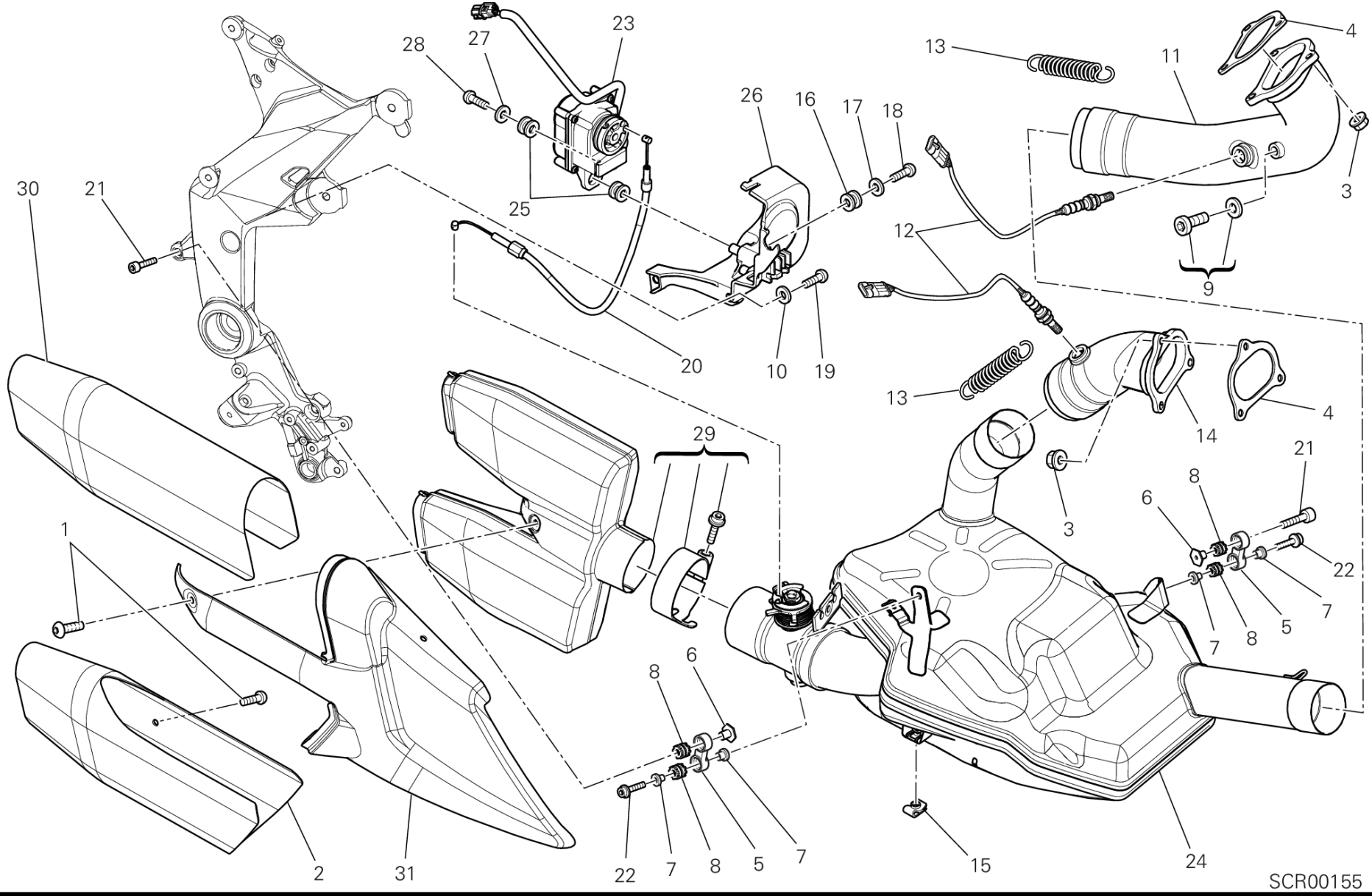
SCR00155

POS.	CODE	DESCRIPTION	QTY	START DATE	END DATE	VALIDITY	NOTES
18	77240458C	SCREW	1	09/03/2012		MOD:MS1200-A;XST:AUS,CHN,EUR,FRA,JAP,THAI	
19	77914271A	SCREW	1	09/03/2012		MOD:MS1200-A;XST:AUS,CHN,EUR,FRA,JAP,THAI	
20	73210291D	CABLE ELECTRIC MOTOR, EXHAUST VALVE	1	09/03/2012		MOD:MS1200-A;XST:AUS,CHN,EUR,FRA,JAP,THAI	
21	77156658B	SCREW TCEIF M6X16	2	09/03/2012		MOD:MS1200-A;XST:AUS,CHN,EUR,FRA,JAP,THAI	
22	77156688B	SCREW TCEIF M6X22X18	2	09/03/2012		MOD:MS1200-A;XST:AUS,CHN,EUR,FRA,JAP,THAI	
23	59340392A	ELECTRIC MOTOR, EXHAUST VALVE	1	09/03/2012		MOD:MS1200-A;XST:AUS,CHN,EUR,FRA,JAP,THAI	
24	57313301A	UNION	1	09/03/2012		MOD:MS1200-A;XST:AUS,CHN,EUR,FRA,JAP,THAI	
25	76411301A	RUBBER PAD	2	09/03/2012		MOD:MS1200-A;XST:AUS,CHN,EUR,FRA,JAP,THAI	
26	82919981A	HOLDER	1	09/03/2012		MOD:MS1200-A;XST:AUS,CHN,EUR,FRA,JAP,THAI	
27	85241731A	WASHER 5.5X20X1.5	1	09/03/2012		MOD:MS1200-A;XST:AUS,CHN,EUR,FRA,JAP,THAI	
28	77440071A	SCREW, TAPPING M4.5X12	1	09/03/2012		MOD:MS1200-A;XST:AUS,CHN,EUR,FRA,JAP,THAI	
29	57313151C	SILENCER	1	09/03/2012		MOD:MS1200-A;XST:AUS,CHN,EUR,FRA,JAP,THAI	
30	46013982B	COVER, EXHAUST UPPER	1	09/03/2012		MOD:MS1200-A;XST:AUS,CHN,EUR,FRA,JAP,THAI	
31	46023963C	COVER, EXHAUST	1	03/05/2011		MOD:MS1200-A;XST:AUS,CHN,EUR,FRA,JAP,THAI	

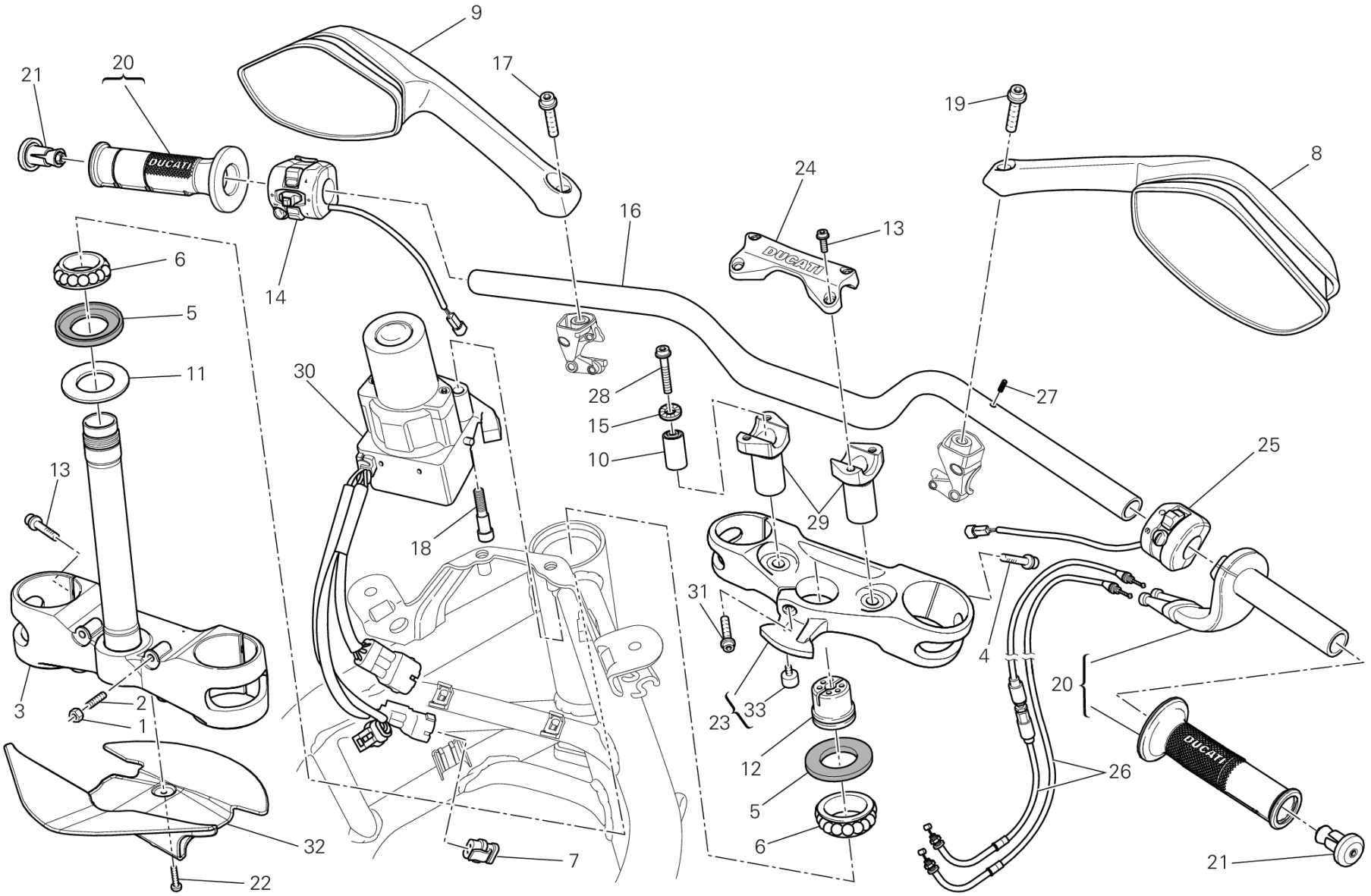
9
21
20
17
19
8
24
16
13
6
14
5
11
30
28
27
15
10
25
13
18
29
31
4
3
2
1
20
23
33
12
26
5
6
32
7
22
21

POS.	CODE	DESCRIPTION	QTY	START DATE	END DATE	VALIDITY	NOTES
1	74750071A	NUT	2	11/05/2010		MOD:MS1200-A;XST:AUS,CHN,EUR,FRA,JAP,THAI	
2	77910991B	SCREW	2	11/05/2010		MOD:MS1200-A;XST:AUS,CHN,EUR,FRA,JAP,THAI	
3	34220741AA	STEERING CROWN WITH PIN	1	01/02/2012		MOD:MS1200-A;XST:AUS,CHN,EUR,FRA,JAP,THAI	
4	77156713B	SCREW	4	11/05/2010		MOD:MS1200-A;XST:AUS,CHN,EUR,FRA,JAP,THAI	
5	93010041B	SEAL RING	2	09/03/2012		MOD:MS1200-A;XST:AUS,CHN,EUR,FRA,JAP,THAI	
6	70241231A	BEARING, STEERING NTN SF07A17P	2	09/03/2012		MOD:MS1200-A;XST:AUS,CHN,EUR,FRA,JAP,THAI	
7	87210641A	CAP, CONNECTOR DQS	1	09/03/2012		MOD:MS1200-A;XST:AUS,CHN,EUR,FRA,JAP,THAI	
8	52310351A	REAR-VIEW MIRROR R.H.	1	09/03/2012		MOD:MS1200-A;XST:AUS,CHN,EUR,FRA,JAP,THAI	
9	52310341A	REAR-VIEW MIRROR L.H.	1	09/03/2012		MOD:MS1200-A;XST:AUS,CHN,EUR,FRA,JAP,THAI	
10	70010611A	VIBRATION DAMPER	2	11/05/2010		MOD:MS1200-A;XST:AUS,CHN,EUR,FRA,JAP,THAI	
11	85211031A	WASHER	1	11/05/2010		MOD:MS1200-A;XST:AUS,CHN,EUR,FRA,JAP,THAI	
12	70310131A	THREAD, STEERING HEAD TOP	1	09/03/2012		MOD:MS1200-A;XST:AUS,CHN,EUR,FRA,JAP,THAI	
13	77157278B	SCREW TCEIF M8X30	8	11/05/2010		MOD:MS1200-A;XST:AUS,CHN,EUR,FRA,JAP,THAI	
14	65110131A	LEFT SWITCH	1	11/05/2010		MOD:MS1200-A;XST:AUS,CHN,EUR,FRA,JAP,THAI	
15	85350111A	WASHER, SPRING	2	11/05/2010		MOD:MS1200-A;XST:AUS,CHN,EUR,FRA,JAP,THAI	
16	36011231AB	HANDLEBAR	1	01/02/2012		MOD:MS1200-A;XST:AUS,CHN,EUR,FRA,JAP,THAI	
17	77159313B	SCREW	1	09/03/2012		MOD:MS1200-A;XST:AUS,CHN,EUR,FRA,JAP,THAI	

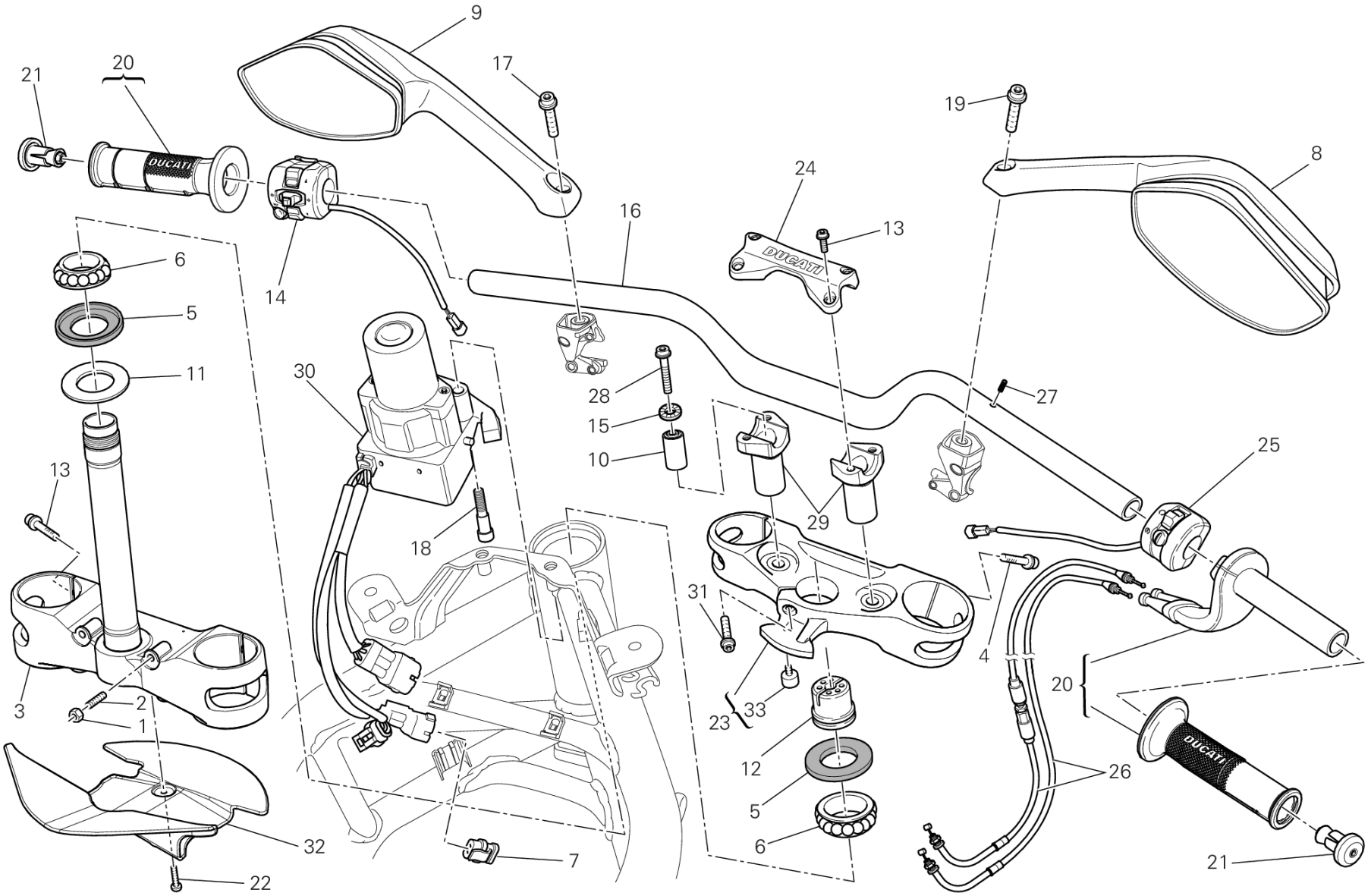
9
21
20
17
19
8
24
16
13
6
14
5
11
30
28
27
15
10
25
13
18
29
31
4
3
2
1
20
23
33
12
26
5
6
32
7
22
21

POS.	CODE	DESCRIPTION	QTY	START DATE	END DATE	VALIDITY	NOTES
18	77916281C	SCREW, SPECIAL	2	09/03/2012		MOD:MS1200-A;XST:AUS,CHN,EUR,FRA,JAP,THAI	
19	77113771B	SCREW L.H.	1	09/03/2012		MOD:MS1200-A;XST:AUS,CHN,EUR,FRA,JAP,THAI	
20	65420291A	THROTTLE CONTROL	1	09/03/2012		MOD:MS1200-A;XST:AUS,CHN,EUR,FRA,JAP,THAI	
21	87210691A	PLUG	2	09/03/2012		MOD:MS1200-A;XST:AUS,CHN,EUR,FRA,JAP,THAI	
22	77211091A	SCREW TBEI M5X12	3	09/03/2012		MOD:MS1200-A;XST:AUS,CHN,EUR,FRA,JAP,THAI	
23	34120741C	STEERING HEAD	1	11/05/2010		MOD:MS1200-A;XST:AUS,CHN,EUR,FRA,JAP,THAI	
24	36011131B	SINGLE U-BOLT	1	11/05/2010		MOD:MS1200-A;XST:AUS,CHN,EUR,FRA,JAP,THAI	
25	65010131B	RIGHT HANDLE SWITCH	1	01/07/2012		MOD:MS1200-A;XST:AUS,CHN,EUR,FRA,JAP,THAI	
26	65620722B	CABLES UNIT	1	09/03/2012		MOD:MS1200-A;XST:AUS,CHN,EUR,FRA,JAP,THAI	
27	6AN155087	PIN	2	11/05/2010		MOD:MS1200-A;XST:AUS,CHN,EUR,FRA,JAP,THAI	
28	77159418B	SCREW M10X1.25X70	2	11/05/2010		MOD:MS1200-A;XST:AUS,CHN,EUR,FRA,JAP,THAI	
29	36011141A	COLUMN	2	11/05/2010		MOD:MS1200-A;XST:AUS,CHN,EUR,FRA,JAP,THAI	
30	28611245B	SWITCH HANDS FREE	1	13/06/2012		MOD:MS1200-A;XST:AUS,CHN,EUR,FRA,THAI	
	28611274B	SWITCH HANDS FREE	1	16/03/2011		MOD:MS1200-A;XST:JAP	JAP
31	77916591A	SCREW	1	11/05/2010		MOD:MS1200-A;XST:AUS,CHN,EUR,FRA,JAP,THAI	
32	46014122A	MUDGUARD, FRONT	1	09/03/2012		MOD:MS1200-A;XST:AUS,CHN,EUR,FRA,JAP,THAI	
33	82113291B	PIN	1	11/05/2010		MOD:MS1200-A;XST:AUS,CHN,EUR,FRA,JAP,THAI	

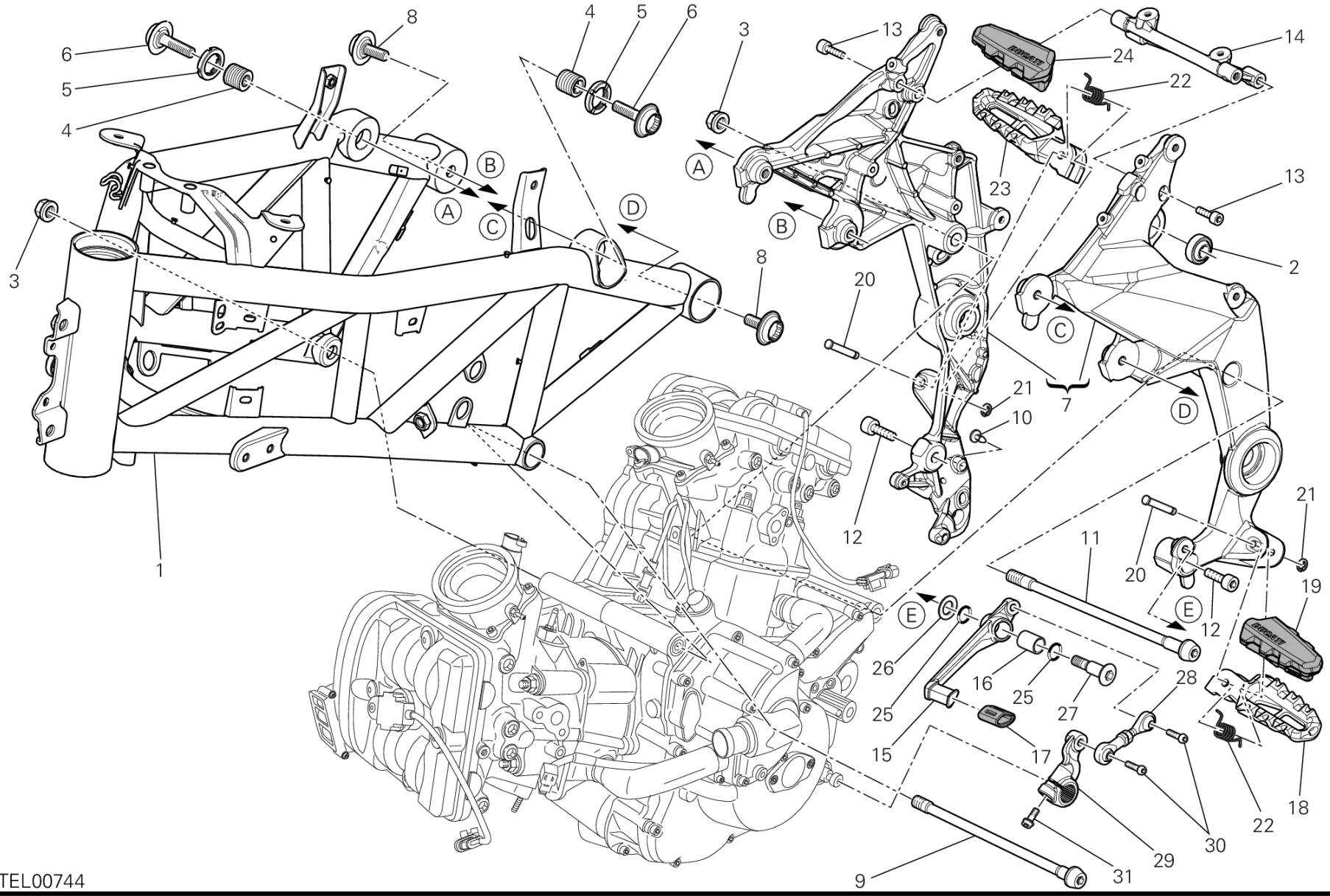
TEL00744

POS.	CODE	DESCRIPTION	QTY	START DATE	END DATE	VALIDITY	NOTES
1	470P7061BK	FRAME (GREY)	1	09/03/2012		MOD:MS1200-A;XST:AUS,CHN,EUR,FRA,JAP,THAI	
2	84840111A	BALL JOINT	1	24/12/2009		MOD:MS1200-A;XST:AUS,CHN,EUR,FRA,JAP,THAI	
3	74840021A	NUT M12	2	09/03/2012		MOD:MS1200-A;XST:AUS,CHN,EUR,FRA,JAP,THAI	
4	77915851A	THREADED DOWEL	2	09/03/2012		MOD:MS1200-A;XST:AUS,CHN,EUR,FRA,JAP,THAI	
5	70310512AA	RING NUT	2	09/03/2012		MOD:MS1200-A;XST:AUS,CHN,EUR,FRA,JAP,THAI	
6	77915841C	SPECIAL SCREW FRONT	2	09/03/2012		MOD:MS1200-A;XST:AUS,CHN,EUR,FRA,JAP,THAI	
7	69926201A	FRAME PLATE SET	1	09/03/2012		MOD:MS1200-A;XST:AUS,CHN,EUR,FRA,JAP,THAI	
8	77916161C	SPECIAL SCREW REAR	2	09/03/2012		MOD:MS1200-A;XST:AUS,CHN,EUR,FRA,JAP,THAI	
9	77917481AA	SCREW, SPECIAL	1	09/03/2012		MOD:MS1200-A;XST:AUS,CHN,EUR,FRA,JAP,THAI	
10	87240561A	PLUG	1	09/03/2012		MOD:MS1200-A;XST:AUS,CHN,EUR,FRA,JAP,THAI	
11	77917491AA	SCREW, SPECIAL	1	09/03/2012		MOD:MS1200-A;XST:AUS,CHN,EUR,FRA,JAP,THAI	
12	77151558B	SCREW	2	09/03/2012		MOD:MS1200-A;XST:AUS,CHN,EUR,FRA,JAP,THAI	
13	77157268C	SCREW	4	09/03/2012		MOD:MS1200-A;XST:AUS,CHN,EUR,FRA,JAP,THAI	
14	83015571A	BRACKET, REAR	1	09/03/2012		MOD:MS1200-A;XST:AUS,CHN,EUR,FRA,JAP,THAI	
15	45612041A	LEVA COMANDO CAMBIO	1	24/12/2009		MOD:MS1200-A;XST:AUS,CHN,EUR,FRA,JAP,THAI	
16	71210341A	BUSH	1	24/12/2009		MOD:MS1200-A;XST:AUS,CHN,EUR,FRA,JAP,THAI	
17	76411322A	RUBBER PAD	1	20/09/2010		MOD:MS1200-A;XST:AUS,CHN,EUR,FRA,JAP,THAI	

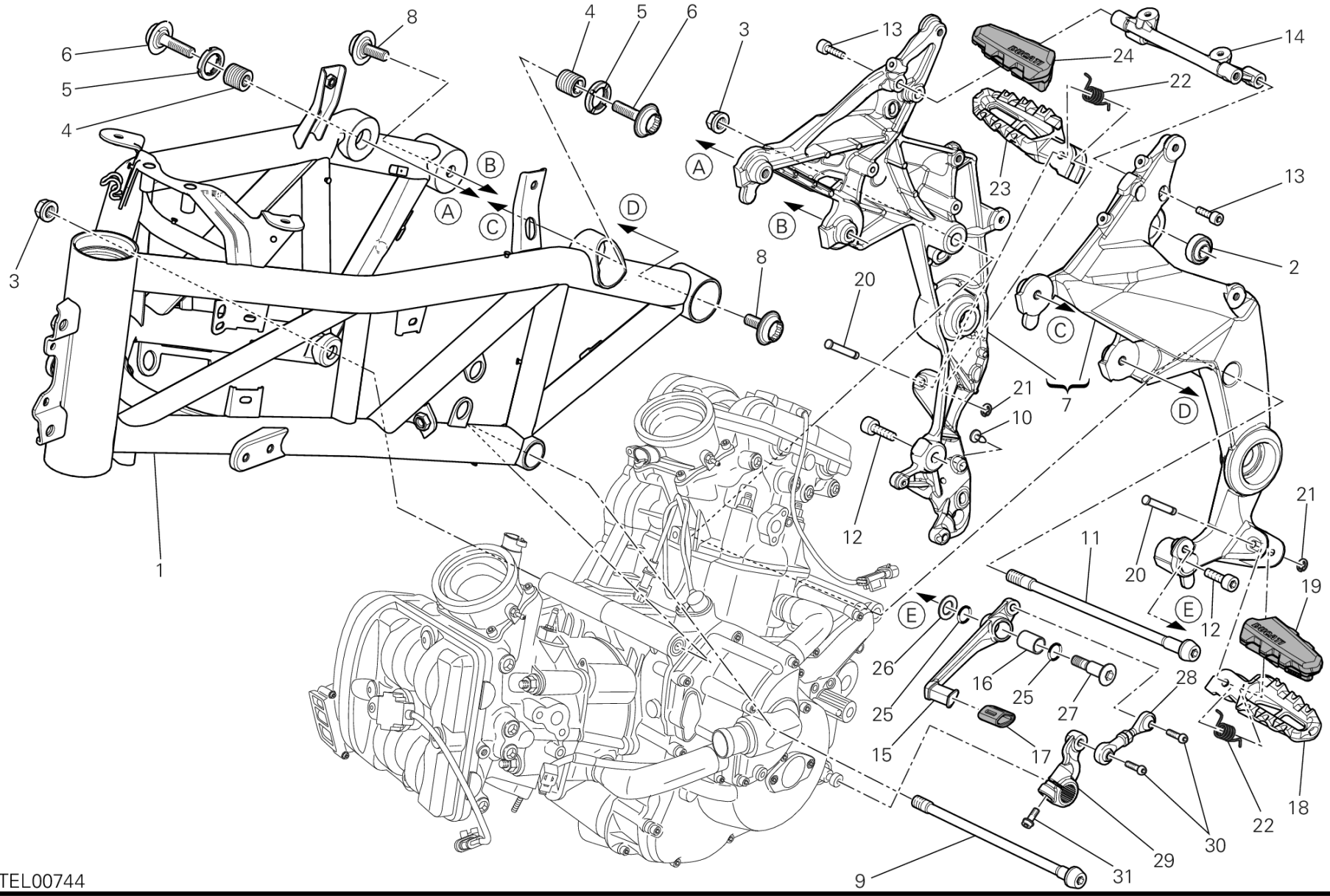
TEL00744

POS.	CODE	DESCRIPTION	QTY	START DATE	END DATE	VALIDITY	NOTES
18	46410601AA	LEFT FOOTREST	1	24/12/2009		MOD:MS1200-A;XST:AUS,CHN,EUR,FRA,JAP,THAI	
19	76510031A	FOOT PEG RUBBER COVER L.H.	1	24/12/2009		MOD:MS1200-A;XST:AUS,CHN,EUR,FRA,JAP,THAI	
20	82110681B	FOOTREST PIN	2	24/12/2009		MOD:MS1200-A;XST:AUS,CHN,EUR,FRA,JAP,THAI	
21	88450031A	CIRCLIP E-TYPE	2	24/12/2009		MOD:MS1200-A;XST:AUS,CHN,EUR,FRA,JAP,THAI	
22	79914991A	SPRING. FOOTREST	2	24/12/2009		MOD:MS1200-A;XST:AUS,CHN,EUR,FRA,JAP,THAI	
23	46410591AA	RIGHT FOOTREST	1	24/12/2009		MOD:MS1200-A;XST:AUS,CHN,EUR,FRA,JAP,THAI	
24	76510021A	FOOT PEG RUBBER COVER R.H.	1	24/12/2009		MOD:MS1200-A;XST:AUS,CHN,EUR,FRA,JAP,THAI	
25	88641161A	O-RING	2	24/12/2009		MOD:MS1200-A;XST:AUS,CHN,EUR,FRA,JAP,THAI	
26	85211511A	WASHER	1	24/12/2009		MOD:MS1200-A;XST:AUS,CHN,EUR,FRA,JAP,THAI	
27	82111701B	PIN PEDAL	1	23/11/2010		MOD:MS1200-A;XST:AUS,CHN,EUR,FRA,JAP,THAI	
28	84840401A	GEARCHANGE ROD	1	09/03/2012		MOD:MS1200-A;XST:AUS,CHN,EUR,FRA,JAP,THAI	
29	45612051A	GEAR CONTROL LEVER	1	09/03/2012		MOD:MS1200-A;XST:AUS,CHN,EUR,FRA,JAP,THAI	
30	77550271A	SCREW	2	09/03/2012		MOD:MS1200-A;XST:AUS,CHN,EUR,FRA,JAP,THAI	
31	77156668B	SCREW TCEIF M6X18	1	09/03/2012		MOD:MS1200-A;XST:AUS,CHN,EUR,FRA,JAP,THAI	

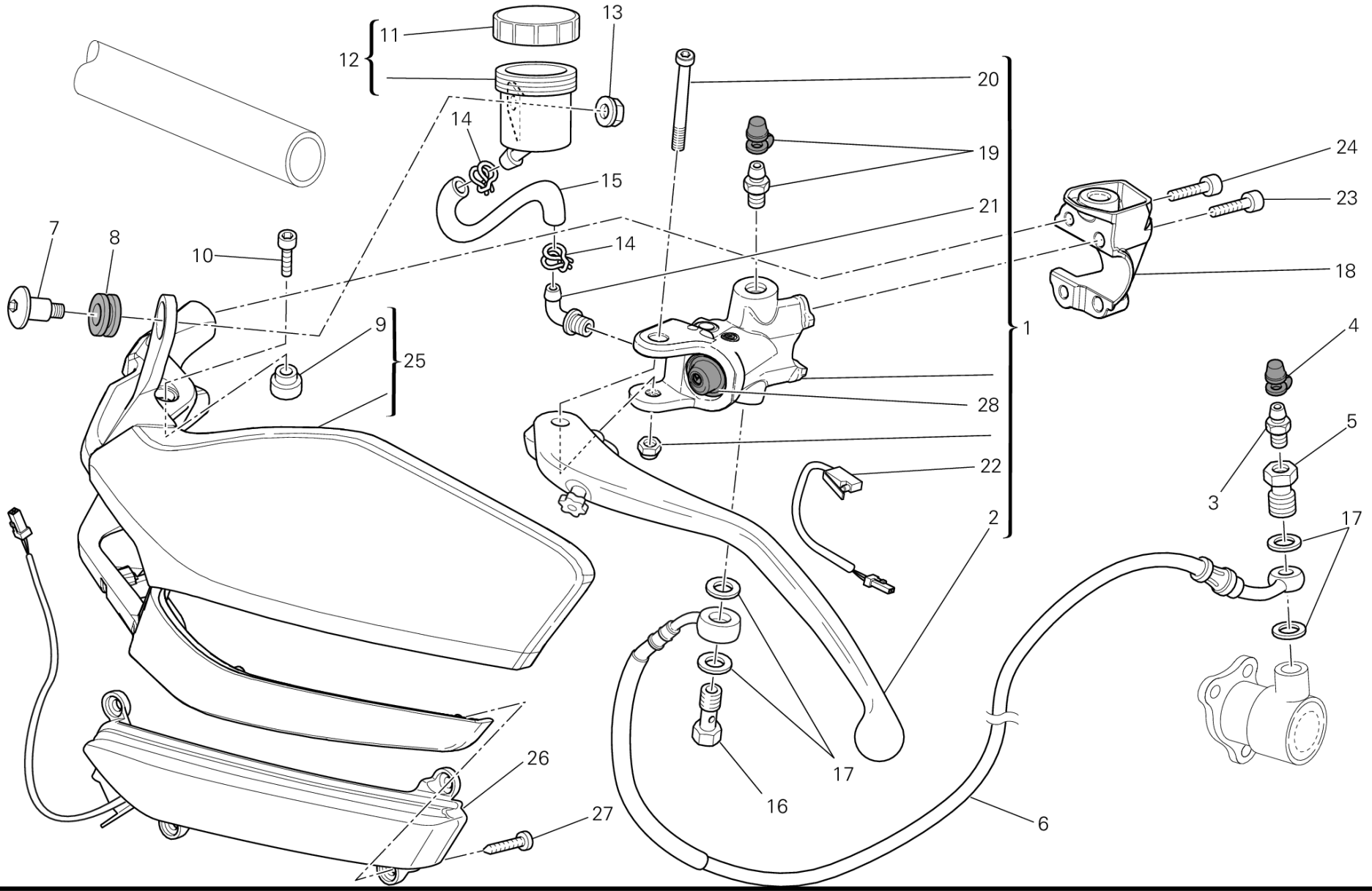
11
12
13
14
15
20
19
24
23
21
7
8
10
14
18
9
25
1
4
28
5
22
3
2
17
17
16
6
26
27

DRAWING 023 - CLUTCH MASTER CYLINDER [MOD:MS1200-A;XST:AUS,CHN,EUR,FRA,JAP,THAI]

GROUP FRAME

POS.	CODE	DESCRIPTION	QTY	START DATE	END DATE	VALIDITY	NOTES
1	63040473A	CLUTCH PUMP	1	01/02/2012		MOD:MS1200-A;XST:AUS,CHN,EUR,FRA,JAP,THAI	
2	63140341A	CLUTCH LEVER	1	16/05/2011		MOD:MS1200-A;XST:AUS,CHN,EUR,FRA,JAP,THAI	
3	18710021A	VALVE, BREATHER	1	01/02/2012		MOD:MS1200-A;XST:AUS,CHN,EUR,FRA,JAP,THAI	
4	61240052A	DUST COVER	1	01/02/2012		MOD:MS1200-A;XST:AUS,CHN,EUR,FRA,JAP,THAI	
5	77913971A	BOLT, BRAKE HOSE	1	01/02/2012		MOD:MS1200-A;XST:AUS,CHN,EUR,FRA,JAP,THAI	
6	63210691A	CLUTCH CONTROL PIPE	1	01/02/2012		MOD:MS1200-A;XST:AUS,CHN,EUR,FRA,JAP,THAI	
7	77910921A	SCREW	1	09/03/2012		MOD:MS1200-A;XST:AUS,CHN,EUR,FRA,JAP,THAI	
8	037072020	DAMPER	1	09/03/2012		MOD:MS1200-A;XST:AUS,CHN,EUR,FRA,JAP,THAI	
9	71319171A	SPACER	1	01/03/2011		MOD:MS1200-A;XST:AUS,CHN,EUR,FRA,JAP,THAI	
10	77110401B	SCREW	1	09/03/2012		MOD:MS1200-A;XST:AUS,CHN,EUR,FRA,JAP,THAI	
11	89340051A	COVER MASTER CYLINDER	1	01/05/2011		MOD:MS1200-A;XST:AUS,CHN,EUR,FRA,JAP,THAI	
12	58540081A	RESERVOIR, BRAKE FLUID	1	01/02/2012		MOD:MS1200-A;XST:AUS,CHN,EUR,FRA,JAP,THAI	
13	74810351B	NUT	1	09/03/2012		MOD:MS1200-A;XST:AUS,CHN,EUR,FRA,JAP,THAI	
14	74140431A	CLAMP	2	01/02/2012		MOD:MS1200-A;XST:AUS,CHN,EUR,FRA,JAP,THAI	
15	87711111A	HOSE, OIL	1	01/02/2012		MOD:MS1200-A;XST:AUS,CHN,EUR,FRA,JAP,THAI	
16	77913661AB	BOLT, BRAKE HOSE M10X1	1	01/02/2012		MOD:MS1200-A;XST:AUS,CHN,EUR,FRA,JAP,THAI	
17	85250241A	WASHER 10X14X1	4	01/02/2012		MOD:MS1200-A;XST:AUS,CHN,EUR,FRA,JAP,THAI	

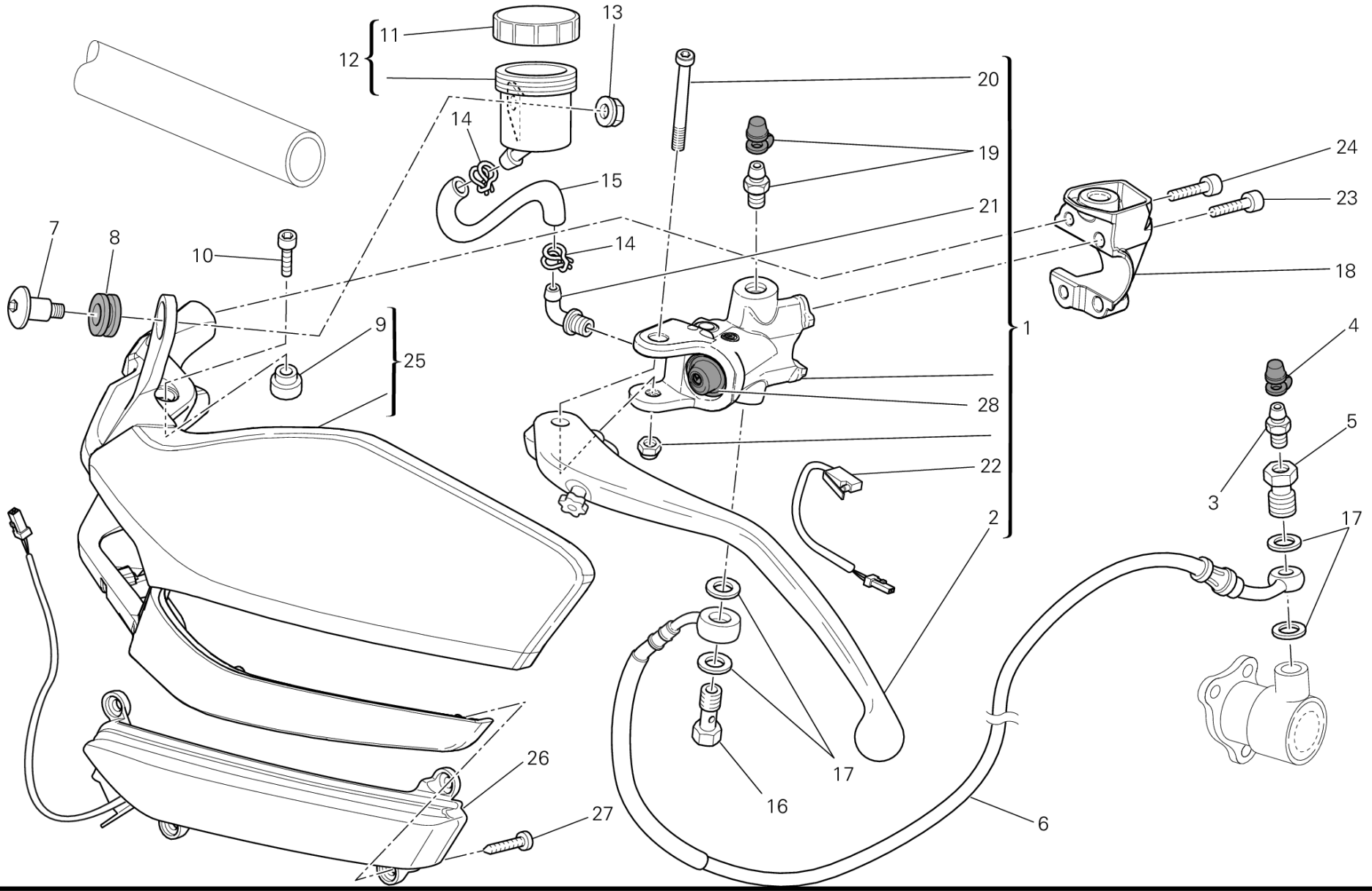
11
12
13
14
15
20
19
24
23
21
7
8
10
14
18
9
25
1
4
28
5
22
3
2
17
17
16
26
27
6

DRAWING 023 - CLUTCH MASTER CYLINDER [MOD:MS1200-A;XST:AUS,CHN,EUR,FRA,JAP,THAI]

GROUP FRAME

POS.	CODE	DESCRIPTION	QTY	START DATE	END DATE	VALIDITY	NOTES
18	80811281AA	CLAMP	1	11/05/2010		MOD:MS1200-A;XST:AUS,CHN,EUR,FRA,JAP,THAI	
19	63140281A	FRONT CALIPER DRAIN SCREW	1			MOD:MS1200-A;XST:AUS,CHN,EUR,FRA,JAP,THAI	
20	62640561A	BOLT, LEVER	1			MOD:MS1200-A;XST:AUS,CHN,EUR,FRA,JAP,THAI	
21	63140081A	JOINT, HOSE	1	16/05/2011		MOD:MS1200-A;XST:AUS,CHN,EUR,FRA,JAP,THAI	
22	53940611A	MICROSWITCH	1	25/05/2010		MOD:MS1200-A;XST:AUS,CHN,EUR,FRA,JAP,THAI	
23	77156718B	SCREW TCEIF M6X30	2	01/01/2012		MOD:MS1200-A;XST:AUS,CHN,EUR,FRA,JAP,THAI	
24	77156443B	SCREW	2	09/03/2012		MOD:MS1200-A;XST:AUS,CHN,EUR,FRA,JAP,THAI	
25	46023852B	GUARD, KNUCKLE, LH	1	09/03/2012		MOD:MS1200-A;XST:AUS,CHN,EUR,FRA,JAP,THAI	
26	53010251B	TURN INDICATOR FRONT L.H.	1	09/03/2012		MOD:MS1200-A;XST:AUS,CHN,EUR,FRA,JAP,THAI	
27	77450131A	SCREW	4	09/03/2012		MOD:MS1200-A;XST:AUS,CHN,EUR,FRA,JAP,THAI	
28	61240391A	DUST COVER	1			MOD:MS1200-A;XST:AUS,CHN,EUR,FRA,JAP,THAI	

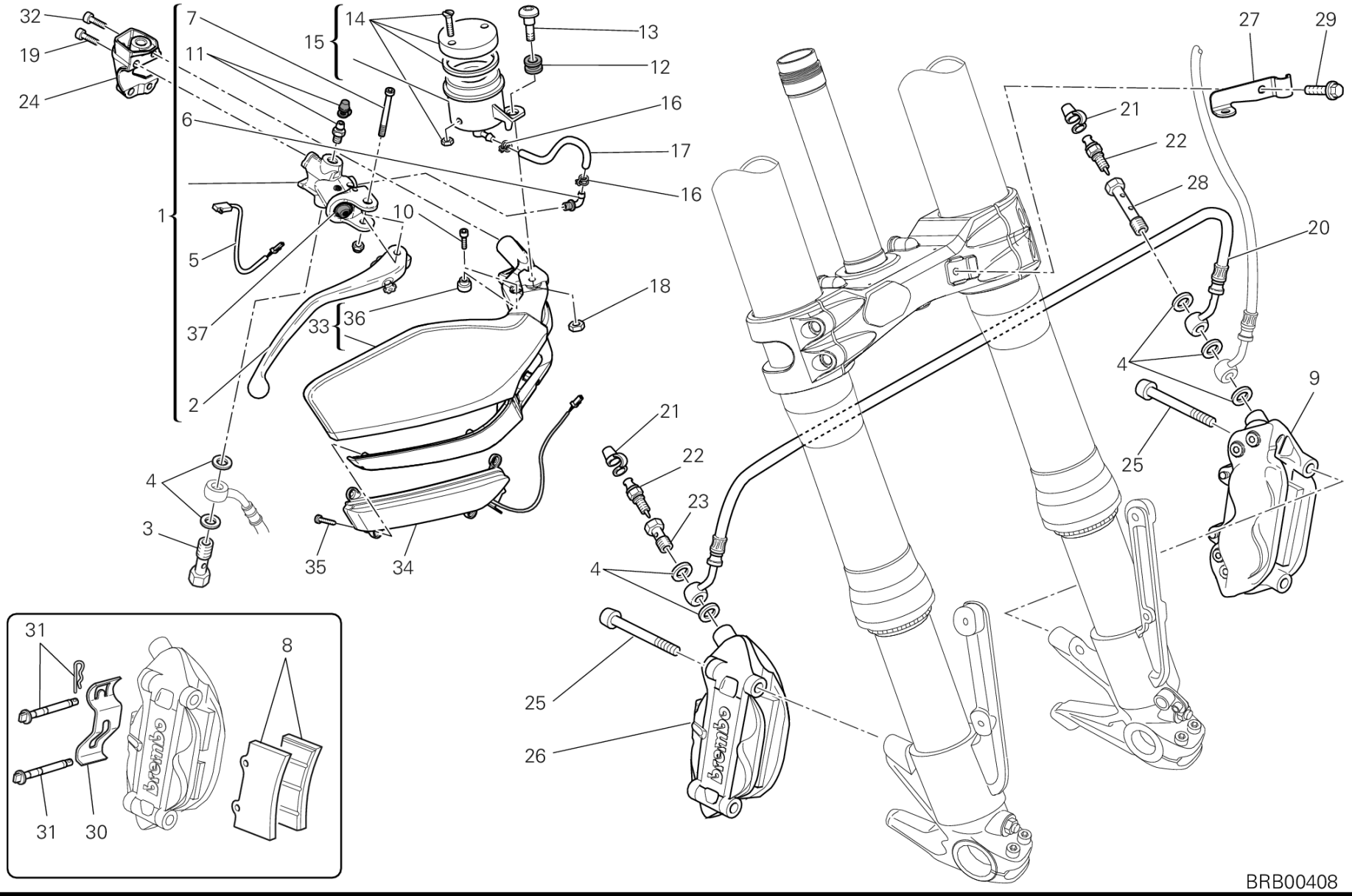
32
19
24
7
11
6
1
5
37
2
15
14
13
12
16
17
16
10
18
33
36
4
3
35
34
21
22
23
4
25
26
27
29
21
22
28
20
4
9
25
31
8
31
30
BRB00408

DRAWING 024 - FRONT BRAKE SYSTEM [MOD:MS1200-A;XST:AUS,CHN,EUR,FRA,JAP,THAI]

GROUP FRAME

POS.	CODE	DESCRIPTION	QTY	START DATE	END DATE	VALIDITY	NOTES
1	62440562A	FRONT BRAKE PUMP	1	24/12/2009		MOD:MS1200-A;XST:AUS,CHN,EUR,FRA,JAP,THAI	
2	63140331A	LEVER, FRONT BRAKE	1	16/05/2011		MOD:MS1200-A;XST:AUS,CHN,EUR,FRA,JAP,THAI	
3	77913661AB	BOLT, BRAKE HOSE M10X1	1	01/02/2012		MOD:MS1200-A;XST:AUS,CHN,EUR,FRA,JAP,THAI	
4	85250241A	WASHER 10X14X1	7	01/02/2012		MOD:MS1200-A;XST:AUS,CHN,EUR,FRA,JAP,THAI	
5	53940621A	MICROSWITCH	1	25/05/2010		MOD:MS1200-A;XST:AUS,CHN,EUR,FRA,JAP,THAI	
6	63140081A	JOINT, HOSE	1	16/05/2011		MOD:MS1200-A;XST:AUS,CHN,EUR,FRA,JAP,THAI	
7	62640561A	BOLT, LEVER	1			MOD:MS1200-A;XST:AUS,CHN,EUR,FRA,JAP,THAI	
8	61340411A	FRONT BRAKE PADS SET	2	25/10/2010		MOD:MS1200-A;XST:AUS,CHN,EUR,FRA,JAP,THAI	
9	61040991A	LEFT FRONT BRAKE CALIPER	1	24/12/2009		MOD:MS1200-A;XST:AUS,CHN,EUR,FRA,JAP,THAI	
10	77110401B	SCREW	1	09/03/2012		MOD:MS1200-A;XST:AUS,CHN,EUR,FRA,JAP,THAI	
11	63140281A	FRONT CALIPER DRAIN SCREW	1			MOD:MS1200-A;XST:AUS,CHN,EUR,FRA,JAP,THAI	
12	037072020	DAMPER	1	24/12/2009		MOD:MS1200-A;XST:AUS,CHN,EUR,FRA,JAP,THAI	
13	77910921A	SCREW	1	09/03/2012		MOD:MS1200-A;XST:AUS,CHN,EUR,FRA,JAP,THAI	
14	800068490	CAP BRAKE FLUID TANK	1			MOD:MS1200-A;XST:AUS,CHN,EUR,FRA,JAP,THAI	
15	58540181A	RESERVOIR, BRAKE FLUID	1	24/12/2009		MOD:MS1200-A;XST:AUS,CHN,EUR,FRA,JAP,THAI	
16	74140431A	CLAMP	2	24/12/2009		MOD:MS1200-A;XST:AUS,CHN,EUR,FRA,JAP,THAI	
17	87711111A	HOSE, OIL	1	01/02/2012		MOD:MS1200-A;XST:AUS,CHN,EUR,FRA,JAP,THAI	

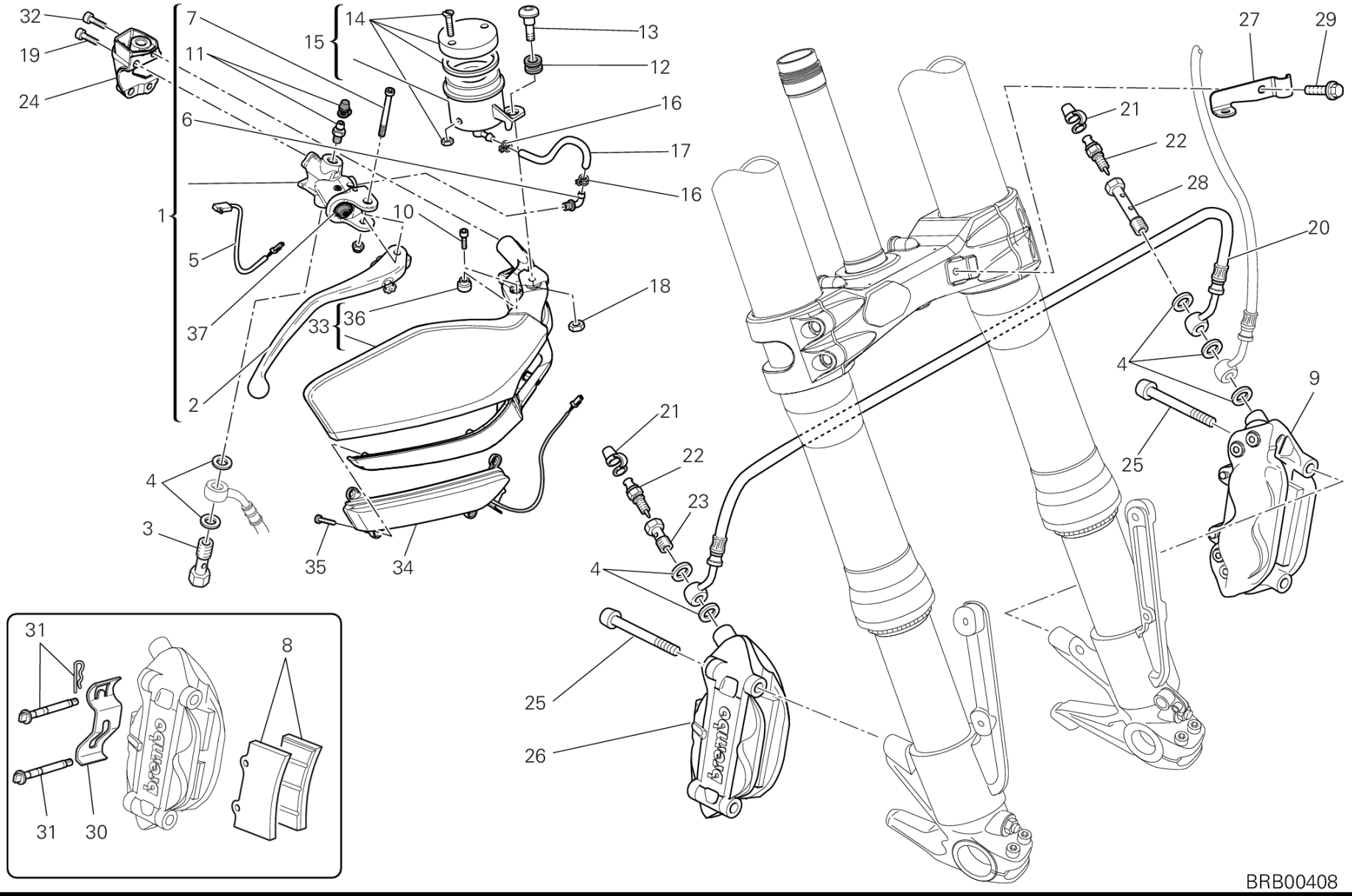
32
19
24
7
11
6
1
5
37
2
15
14
13
12
16
17
16
10
18
33
36
4
3
35
34
21
22
23
4
25
26
27
29
21
22
28
20
4
9
25
31
8
31
30
BRB00408

POS.	CODE	DESCRIPTION	QTY	START DATE	END DATE	VALIDITY	NOTES
18	74810351B	NUT	1	09/03/2012		MOD:MS1200-A;XST:AUS,CHN,EUR,FRA,JAP,THAI	
19	77156713B	SCREW	2	09/03/2012		MOD:MS1200-A;XST:AUS,CHN,EUR,FRA,JAP,THAI	
20	61810391A	FRONT BRAKE HOSE	1	24/12/2009		MOD:MS1200-A;XST:AUS,CHN,EUR,FRA,JAP,THAI	
21	61240052A	DUST COVER	1	01/02/2012		MOD:MS1200-A;XST:AUS,CHN,EUR,FRA,JAP,THAI	
22	18710021A	VALVE, BREATHER	2	25/05/2010		MOD:MS1200-A;XST:AUS,CHN,EUR,FRA,JAP,THAI	
23	77913971A	BOLT, BRAKE HOSE	1	01/02/2012		MOD:MS1200-A;XST:AUS,CHN,EUR,FRA,JAP,THAI	
24	80811271AA	CLAMP R.H. MATT BLACK	1	09/03/2012		MOD:MS1200-A;XST:AUS,CHN,EUR,FRA,JAP,THAI	
25	77915111B	SCREW	4	09/03/2012		MOD:MS1200-A;XST:AUS,CHN,EUR,FRA,JAP,THAI	
26	61041001A	RIGHT FRONT BRAKE CALIPER	1	24/12/2009		MOD:MS1200-A;XST:AUS,CHN,EUR,FRA,JAP,THAI	
27	83015651D	BRACKET	1	09/03/2012		MOD:MS1200-A;XST:AUS,CHN,EUR,FRA,JAP,THAI	
28	77914651A	BOLT, BRAKE HOSE	1			MOD:MS1200-A;XST:AUS,CHN,EUR,FRA,JAP,THAI	
29	77210591A	SCREW TEF M6X10	1	09/03/2012		MOD:MS1200-A;XST:AUS,CHN,EUR,FRA,JAP,THAI	
30	61240371A	SPRING, PAD STOPPER	2			MOD:MS1200-A;XST:AUS,CHN,EUR,FRA,JAP,THAI	
31	61240141A	PAD PINS OVERHAUL KIT	2			MOD:MS1200-A;XST:AUS,CHN,EUR,FRA,JAP,THAI	
32	77156443B	SCREW	2	09/03/2012		MOD:MS1200-A;XST:AUS,CHN,EUR,FRA,JAP,THAI	
33	46023842B	GUARD, KNUCKLE, RH	1	09/03/2012		MOD:MS1200-A;XST:AUS,CHN,EUR,FRA,JAP,THAI	
34	53010241B	TURN INDICATOR FRONT R.H.	1	09/03/2012		MOD:MS1200-A;XST:AUS,CHN,EUR,FRA,JAP,THAI	

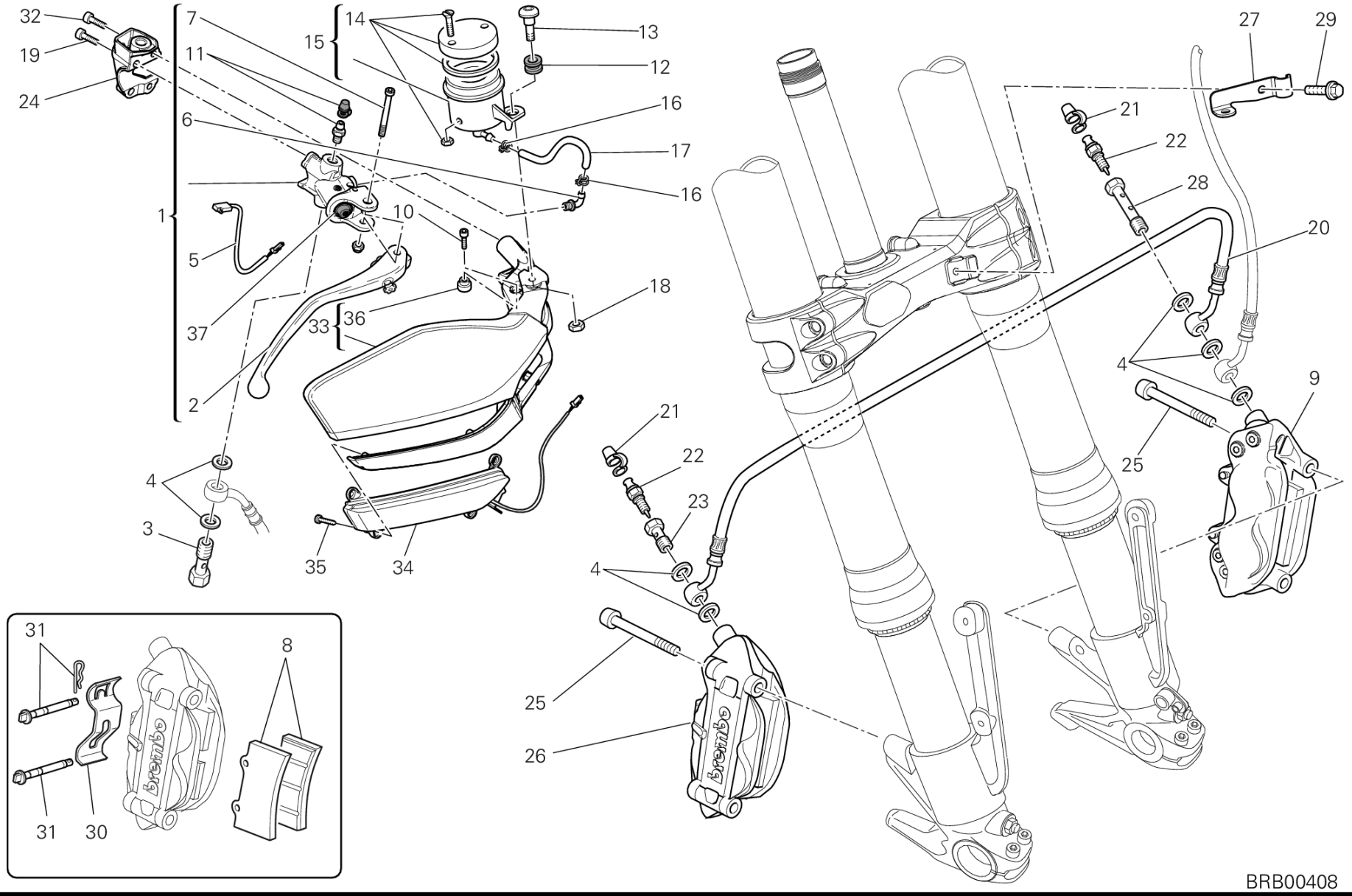
32
19
24
7
11
6
1
5
37
2
15
14
13
12
16
17
16
10
18
33
36
4
3
35
34
27
29
21
22
28
20
4
9
25
21
22
23
4
25
26
31
8
31
30
BRB00408

POS.	CODE	DESCRIPTION	QTY	START DATE	END DATE	VALIDITY	NOTES
35	77450131A	SCREW	4	09/03/2012		MOD:MS1200-A;XST:AUS,CHN,EUR,FRA,JAP,THAI	
36	71319171A	SPACER	1	01/03/2011		MOD:MS1200-A;XST:AUS,CHN,EUR,FRA,JAP,THAI	
37	61240391A	DUST COVER	1			MOD:MS1200-A;XST:AUS,CHN,EUR,FRA,JAP,THAI	

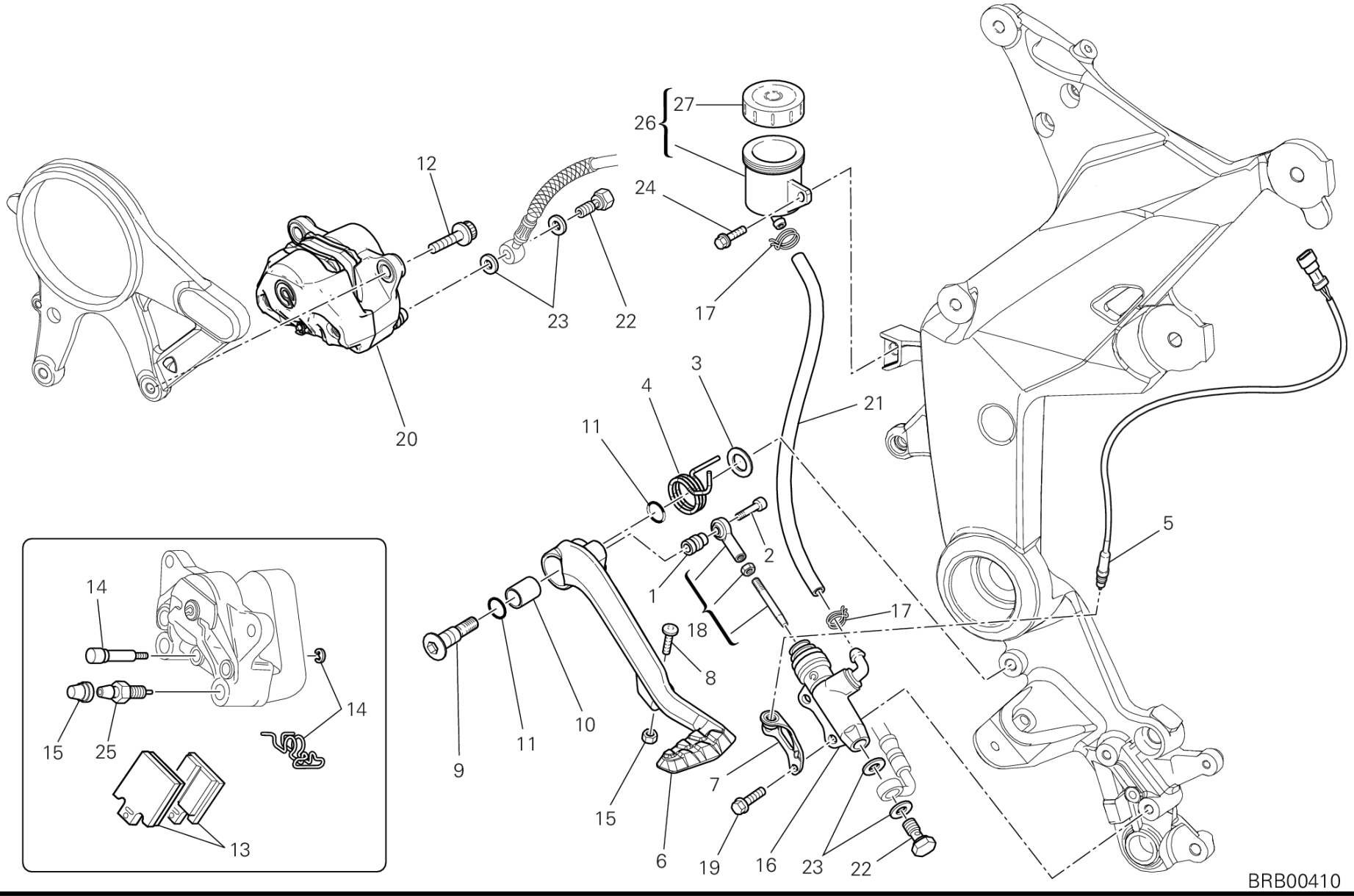
27
26
12
24
23
22
17
20
3
4
21
11
5
2
1
17
18
8
9
11
10
7
15
6
19
16
23
22
14
14
15
25
13
BRB00410

DRAWING 025 - REAR BRAKING SYSTEM [MOD:MS1200-A;XST:AUS,CHN,EUR,FRA,JAP,THAI]

GROUP FRAME

POS.	CODE	DESCRIPTION	QTY	START DATE	END DATE	VALIDITY	NOTES
1	82113311A	SPACER	1	09/03/2012		MOD:MS1200-A;XST:AUS,CHN,EUR,FRA,JAP,THAI	
2	77150708B	SCREW	1	09/03/2012		MOD:MS1200-A;XST:AUS,CHN,EUR,FRA,JAP,THAI	
3	85211511A	WASHER	1	09/03/2012		MOD:MS1200-A;XST:AUS,CHN,EUR,FRA,JAP,THAI	
4	79915071A	SPRING	1	09/03/2012		MOD:MS1200-A;XST:AUS,CHN,EUR,FRA,JAP,THAI	
5	53940031A	SWITCH ASSY, SIDE STAND	1	09/03/2012		MOD:MS1200-A;XST:AUS,CHN,EUR,FRA,JAP,THAI	
6	45720482A	PEDAL, BRAKE	1	09/03/2012		MOD:MS1200-A;XST:AUS,CHN,EUR,FRA,JAP,THAI	
7	47317901A	BRACKET	1	09/03/2012		MOD:MS1200-A;XST:AUS,CHN,EUR,FRA,JAP,THAI	
8	77912371B	SCREW	1	09/03/2012		MOD:MS1200-A;XST:AUS,CHN,EUR,FRA,JAP,THAI	
9	82111701B	PIN PEDAL	1	23/11/2010		MOD:MS1200-A;XST:AUS,CHN,EUR,FRA,JAP,THAI	
10	71210341A	BUSH	1	24/12/2009		MOD:MS1200-A;XST:AUS,CHN,EUR,FRA,JAP,THAI	
11	88641161A	O-RING	2	24/12/2009		MOD:MS1200-A;XST:AUS,CHN,EUR,FRA,JAP,THAI	
12	77157238B	SCREW TCEIF M8X20	2	09/03/2012		MOD:MS1200-A;XST:AUS,CHN,EUR,FRA,JAP,THAI	
13	61340381A	REAR BRAKE PADS SET	1	14/03/2012		MOD:MS1200-A;XST:AUS,CHN,EUR,FRA,JAP,THAI	
14	61240161A	PAD PINS OVERHAUL KIT	1			MOD:MS1200-A;XST:AUS,CHN,EUR,FRA,JAP,THAI	
15	61240081A	DUST PLUG	1			MOD:MS1200-A;XST:AUS,CHN,EUR,FRA,JAP,THAI	
16	62540201A	REAR BRAKE PUMP	1	24/12/2009		MOD:MS1200-A;XST:AUS,CHN,EUR,FRA,JAP,THAI	
17	74140431A	CLAMP	2	01/02/2012		MOD:MS1200-A;XST:AUS,CHN,EUR,FRA,JAP,THAI	

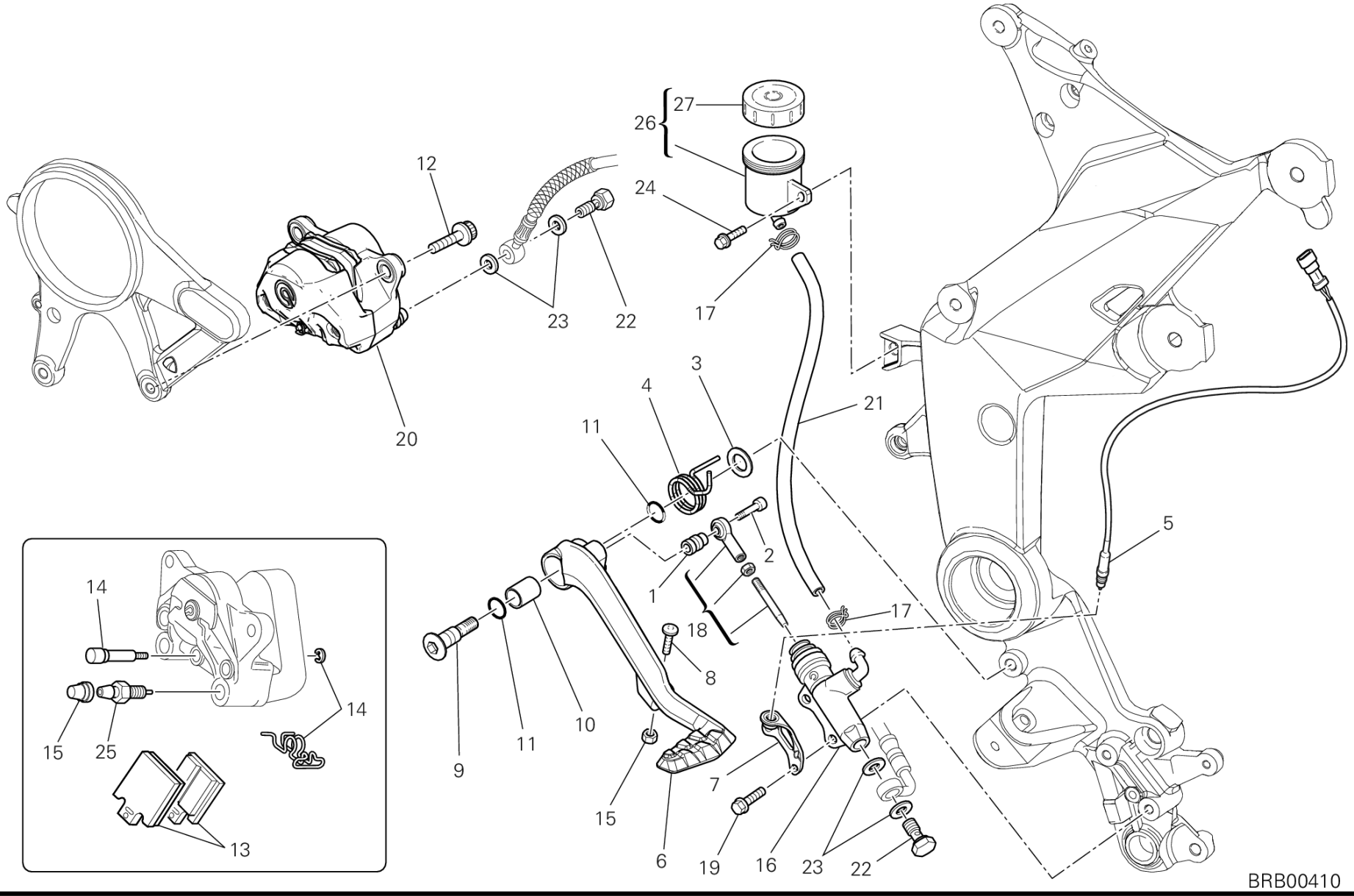
27
26
12
24
23
22
17
20
3
4
21
11
5
2
1
17
18
8
9
11
10
15
7
6
19
16
23
22
14
14
15
25
13
BRB00410

DRAWING 025 - REAR BRAKING SYSTEM [MOD:MS1200-A;XST:AUS,CHN,EUR,FRA,JAP,THAI]

GROUP FRAME

POS.	CODE	DESCRIPTION	QTY	START DATE	END DATE	VALIDITY	NOTES
18	11721131A	ROD, PUSH	1	09/03/2012		MOD:MS1200-A;XST:AUS,CHN,EUR,FRA,JAP,THAI	
19	77156678B	SCREW TCEIF M6X20	2	09/03/2012		MOD:MS1200-A;XST:AUS,CHN,EUR,FRA,JAP,THAI	
20	61140381A	REAR BRAKE CALIPER	1	24/12/2009		MOD:MS1200-A;XST:AUS,CHN,EUR,FRA,JAP,THAI	
21	87711541A	PIPE	1	24/12/2009		MOD:MS1200-A;XST:AUS,CHN,EUR,FRA,JAP,THAI	
22	77913661AB	BOLT, BRAKE HOSE M10X1	2	01/02/2012		MOD:MS1200-A;XST:AUS,CHN,EUR,FRA,JAP,THAI	
23	85250241A	WASHER 10X14X1	4	01/02/2012		MOD:MS1200-A;XST:AUS,CHN,EUR,FRA,JAP,THAI	
24	77156653B	SCREW	1	09/03/2012		MOD:MS1200-A;XST:AUS,CHN,EUR,FRA,JAP,THAI	
25	63140161A	FRONT CALIPER DRAIN SCREW	1			MOD:MS1200-A;XST:AUS,CHN,EUR,FRA,JAP,THAI	
26	58540081A	RESERVOIR, BRAKE FLUID	1	01/02/2012		MOD:MS1200-A;XST:AUS,CHN,EUR,FRA,JAP,THAI	
27	89340051A	COVER MASTER CYLINDER	1	01/05/2011		MOD:MS1200-A;XST:AUS,CHN,EUR,FRA,JAP,THAI	

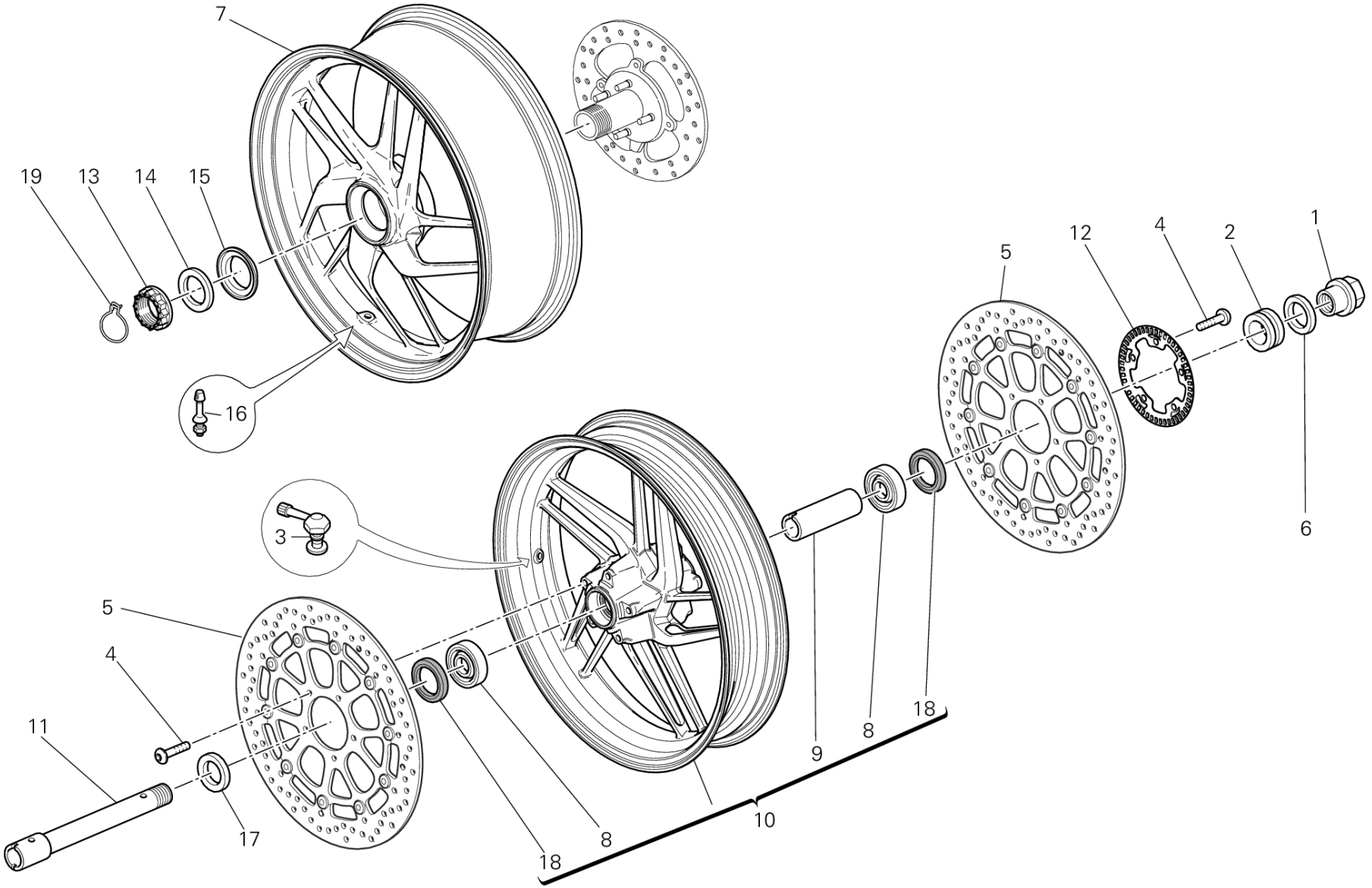
7
19
13
14
15
16
3
5
4
11
17
18
8
10
9
18
8
5
12
4
2
1
6
TEL00739

POS.	CODE	DESCRIPTION	QTY	START DATE	END DATE	VALIDITY	NOTES
1	74810651A	NUT	1	09/03/2012		MOD:MS1200-A;XST:AUS,CHN,EUR,FRA,JAP,THAI	
2	71311973A	LEFT SPACER	1	09/03/2012		MOD:MS1200-A;XST:AUS,CHN,EUR,FRA,JAP,THAI	
3	49720012A	VALVE, TUBELESS TIRE	1	01/01/2001		MOD:MS1200-A;XST:AUS,CHN,EUR,FRA,JAP,THAI	
4	77913991A	SCREW M8X20	10	01/01/2001		MOD:MS1200-A;XST:AUS,CHN,EUR,FRA,JAP,THAI	
5	49241011A	FRONT BRAKE DISC	2	01/01/2001		MOD:MS1200-A;XST:AUS,CHN,EUR,FRA,JAP,THAI	
6	85212221A	WASHER 30X40X1	1	09/03/2012		MOD:MS1200-A;XST:AUS,CHN,EUR,FRA,JAP,THAI	
7	50211551AT	WHEEL RIM (REAR) (BLACK)	1	01/01/2012		MOD:MS1200-A;XST:AUS,CHN,EUR,FRA,JAP,THAI	
8	70250621A	BEARING	2	24/12/2009		MOD:MS1200-A;XST:AUS,CHN,EUR,FRA,JAP,THAI	
9	71410941A	INNER SPACER	1	24/12/2009		MOD:MS1200-A;XST:AUS,CHN,EUR,FRA,JAP,THAI	
10	50121631AT	FRONT WHEEL RIM BLACK	1	01/01/2001		MOD:MS1200-A;XST:AUS,CHN,EUR,FRA,JAP,THAI	
11	81910601A	FRONT WHEEL SPINDLE	1	09/03/2012		MOD:MS1200-A;XST:AUS,CHN,EUR,FRA,JAP,THAI	
12	50410051A	FRONT PHONIC WHEEL	1	01/01/2001		MOD:MS1200-A;XST:AUS,CHN,EUR,FRA,JAP,THAI	
13	75011391A	NUT	1	09/03/2012		MOD:MS1200-A;XST:AUS,CHN,EUR,FRA,JAP,THAI	
14	85212211A	WASHER 48.5X65X0.5	1	09/03/2012		MOD:MS1200-A;XST:AUS,CHN,EUR,FRA,JAP,THAI	
15	71413231AA	SPACER	1	09/03/2012		MOD:MS1200-A;XST:AUS,CHN,EUR,FRA,JAP,THAI	
16	49720031A	VALVE, TUBELESS TIRE	1	01/01/2012		MOD:MS1200-A;XST:AUS,CHN,EUR,FRA,JAP,THAI	
17	71311961A	RIGHT SPACER	1	09/03/2012		MOD:MS1200-A;XST:AUS,CHN,EUR,FRA,JAP,THAI	

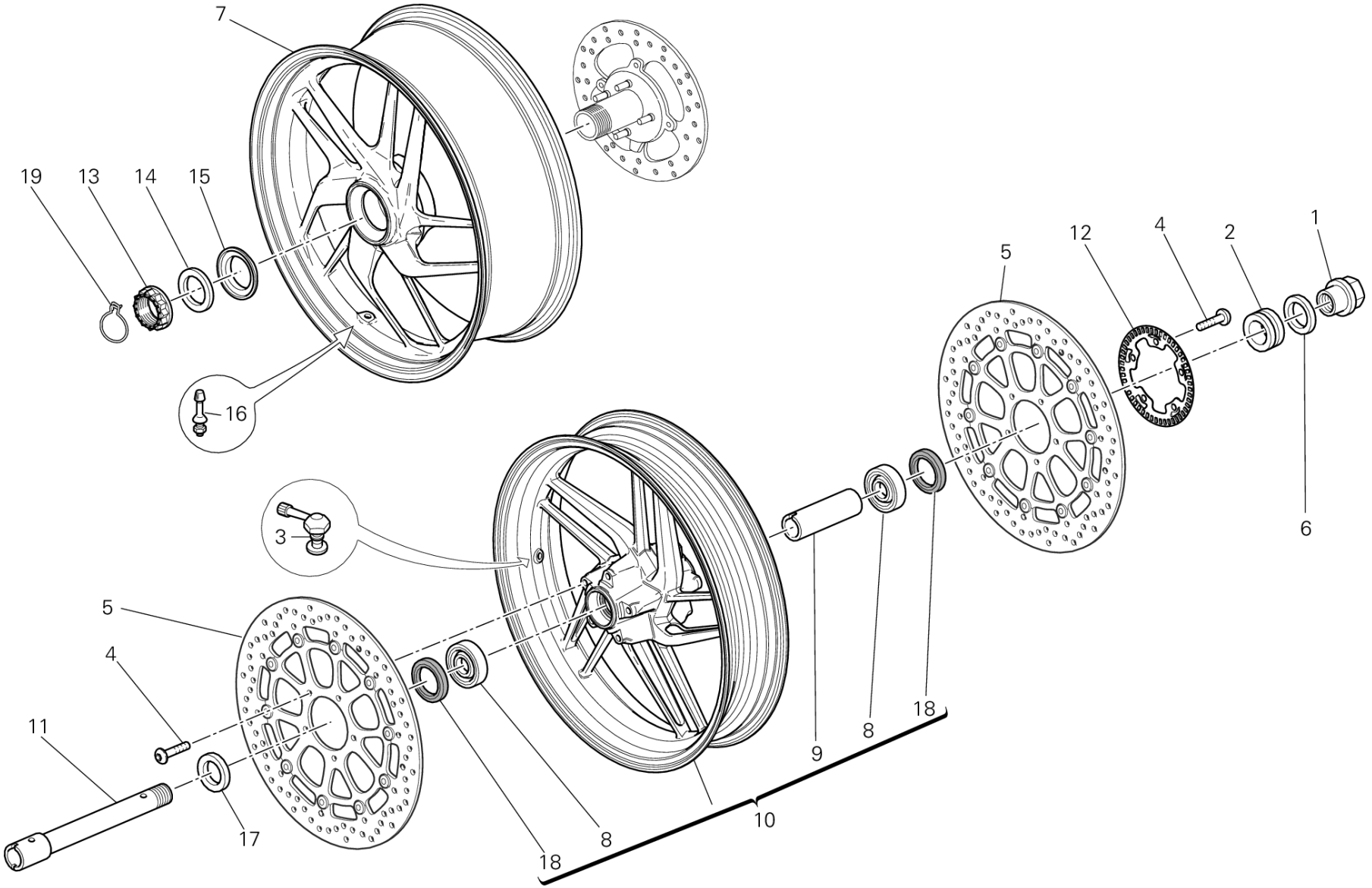

TEL00739

POS.	CODE	DESCRIPTION	QTY	START DATE	END DATE	VALIDITY	NOTES
18	93041501A	SEAL RING	2	24/12/2009		MOD:MS1200-A;XST:AUS,CHN,EUR,FRA,JAP,THAI	
19	75910222A	CLIP	1	09/03/2012		MOD:MS1200-A;XST:AUS,CHN,EUR,FRA,JAP,THAI	

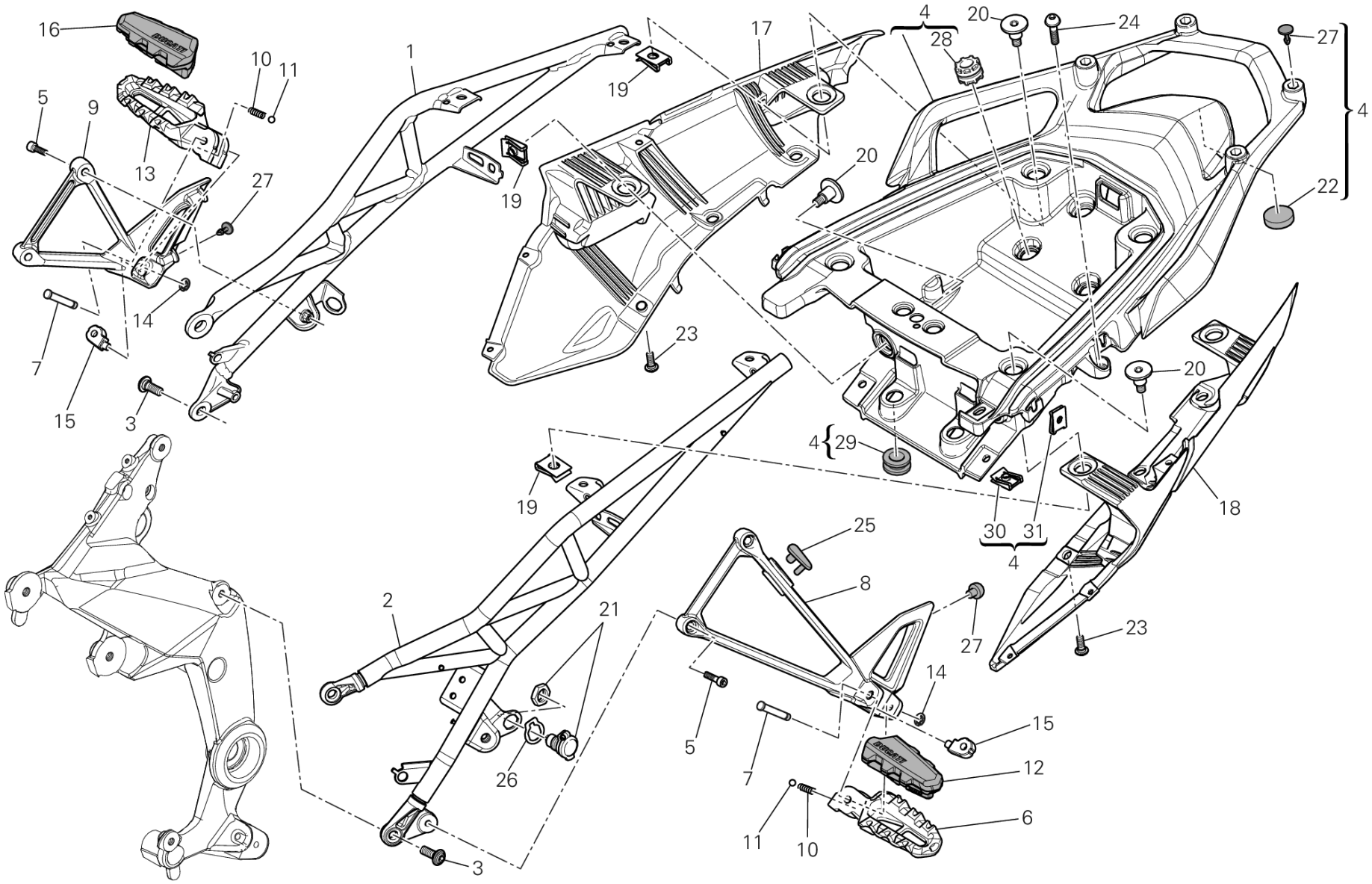
16
10
11
1
19
17
4
28
20
24
27
5
9
13
27
19
20
22
4
14
23
7
15
3
20
4
29
19
18
30
31
4
25
2
8
21
27
23
14
5
7
15
12
26
11
10
6
3
TEL00748

DRAWING 027 - REAR FRAME COMP. [MOD:MS1200-A;XST:AUS,CHN,EUR,FRA,JAP,THAI]

GROUP FRAME

POS.	CODE	DESCRIPTION	QTY	START DATE	END DATE	VALIDITY	NOTES
1	47110201AA	REAR FRAME R.H. MATT BLACK	1	09/03/2012		MOD:MS1200-A;XST:AUS,CHN,EUR,FRA,JAP,THAI	
2	47110141CA	REAR FRAME L.H. MATT BLACK	1	09/03/2012		MOD:MS1200-A;XST:AUS,CHN,EUR,FRA,JAP,THAI	
3	77211082B	SCREW, SPECIAL	4	09/03/2012		MOD:MS1200-A;XST:AUS,CHN,EUR,FRA,JAP,THAI	
4	55920091B	PILLION RIDER GRIP REAR	1	08/06/2012		MOD:MS1200-A;XST:AUS,CHN,EUR,FRA,JAP,THAI	
5	77110351A	SCREW TCEIF M8X25	4	09/03/2012		MOD:MS1200-A;XST:AUS,CHN,EUR,FRA,JAP,THAI	
6	46410601AA	LEFT FOOTREST	1	24/12/2009		MOD:MS1200-A;XST:AUS,CHN,EUR,FRA,JAP,THAI	
7	82110681B	FOOTREST PIN	2	24/12/2009		MOD:MS1200-A;XST:AUS,CHN,EUR,FRA,JAP,THAI	
8	82411703AA	REAR L.H. PLATE	1	24/12/2009		MOD:MS1200-A;XST:AUS,CHN,EUR,FRA,JAP,THAI	
9	82411693AA	REAR R.H. PLATE	1	24/12/2009		MOD:MS1200-A;XST:AUS,CHN,EUR,FRA,JAP,THAI	
10	79910241A	SPRING	2	24/12/2009		MOD:MS1200-A;XST:AUS,CHN,EUR,FRA,JAP,THAI	
11	84740021A	BALL	2	24/12/2009		MOD:MS1200-A;XST:AUS,CHN,EUR,FRA,JAP,THAI	
12	76510031A	FOOT PEG RUBBER COVER L.H.	1	24/12/2009		MOD:MS1200-A;XST:AUS,CHN,EUR,FRA,JAP,THAI	
13	46410591AA	RIGHT FOOTREST	1	24/12/2009		MOD:MS1200-A;XST:AUS,CHN,EUR,FRA,JAP,THAI	
14	88450031A	CIRCLIP E-TYPE	2	24/12/2009		MOD:MS1200-A;XST:AUS,CHN,EUR,FRA,JAP,THAI	
15	69610131A	SPRING RETAINER	2	24/12/2009		MOD:MS1200-A;XST:AUS,CHN,EUR,FRA,JAP,THAI	
16	76510021A	FOOT PEG RUBBER COVER R.H.	1	24/12/2009		MOD:MS1200-A;XST:AUS,CHN,EUR,FRA,JAP,THAI	
17	48211601A	TAIL GUARD BOTTOM R.H.	1	09/03/2012		MOD:MS1200-A;XST:AUS,CHN,EUR,FRA,JAP,THAI	

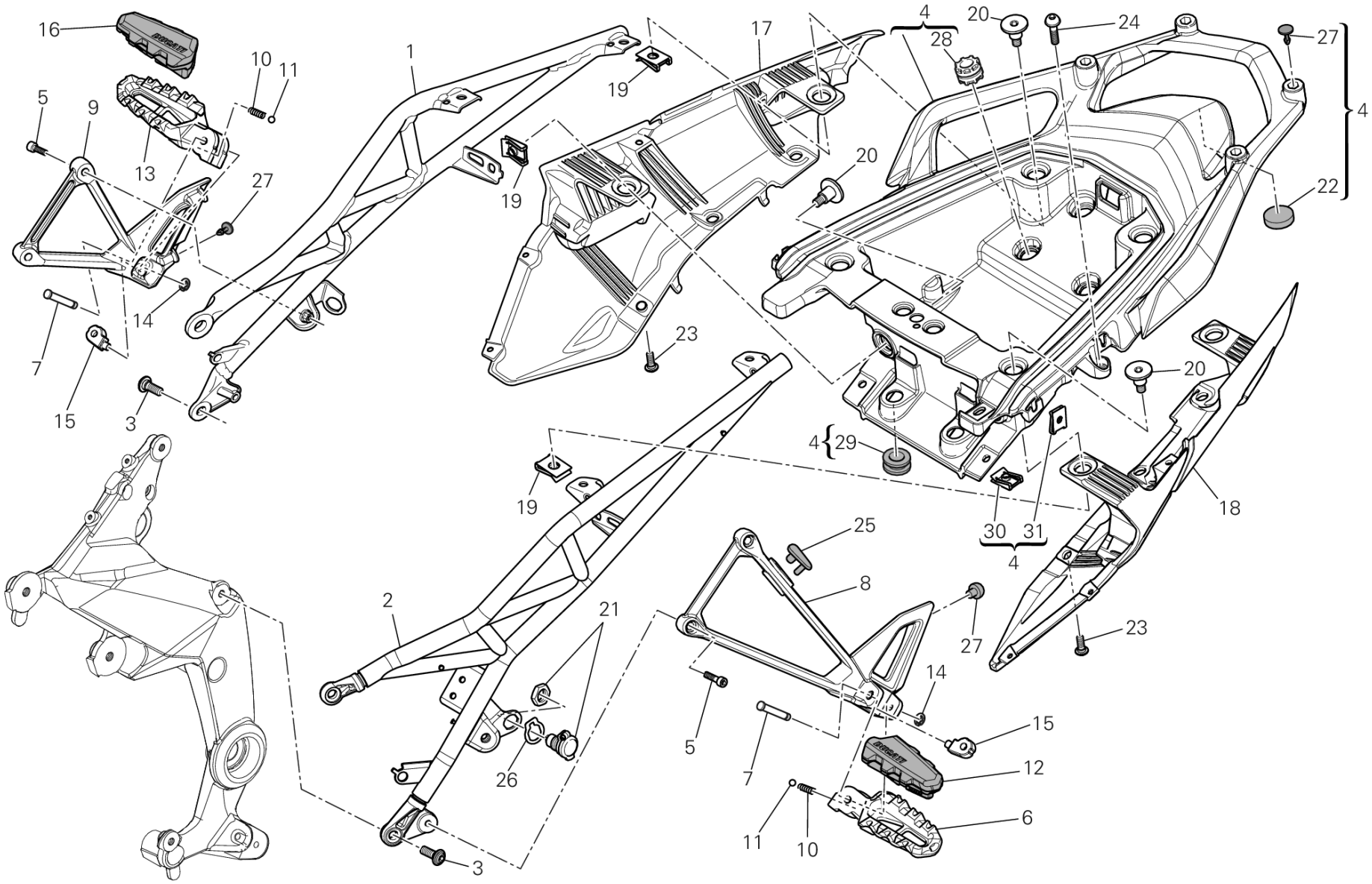
16
10
11
1
19
17
4
28
20
24
27
5
9
13
27
19
20
22
4
14
23
7
15
3
20
4
29
19
18
30
31
4
25
2
8
21
27
23
14
5
7
15
12
26
11
10
6
3
TEL00748

POS.	CODE	DESCRIPTION	QTY	START DATE	END DATE	VALIDITY	NOTES
18	48211611A	TAIL GUARD BOTTOM L.H.	1	09/03/2012		MOD:MS1200-A;XST:AUS,CHN,EUR,FRA,JAP,THAI	
19	85041471A	CLIP NUT	6	09/03/2012		MOD:MS1200-A;XST:AUS,CHN,EUR,FRA,JAP,THAI	
20	77916021B	SCREW, SPECIAL	6	09/03/2012		MOD:MS1200-A;XST:AUS,CHN,EUR,FRA,JAP,THAI	
21	38640132A	SOCKET, LOW VOLTAGE	2	09/03/2012		MOD:MS1200-A;XST:AUS,CHN,EUR,FRA,JAP,THAI	
22	86611221B	PAD	1	08/06/2012		MOD:MS1200-A;XST:AUS,CHN,EUR,FRA,JAP,THAI	
23	77914391D	SCREW	6	09/03/2012		MOD:MS1200-A;XST:AUS,CHN,EUR,FRA,JAP,THAI	
24	77210853B	SCREW TCEI M5X9	2	09/03/2012		MOD:MS1200-A;XST:AUS,CHN,EUR,FRA,JAP,THAI	
25	87210451A	PLUG	1	24/12/2009		MOD:MS1200-A;XST:AUS,CHN,EUR,FRA,JAP,THAI	
26	71319331A	SPACER	2	09/03/2012		MOD:MS1200-A;XST:AUS,CHN,EUR,FRA,JAP,THAI	
27	87240561A	PLUG	8	24/12/2009		MOD:MS1200-A;XST:AUS,CHN,EUR,FRA,JAP,THAI	
28	76410241A	VIBRATION DAMPER PAD	4			MOD:MS1200-A;XST:AUS,CHN,EUR,FRA,JAP,THAI	
29	76410641A	VIBRATION DAMPER PAD	2			MOD:MS1200-A;XST:AUS,CHN,EUR,FRA,JAP,THAI	
30	85040381A	QUICK FASTENING	3			MOD:MS1200-A;XST:AUS,CHN,EUR,FRA,JAP,THAI	
31	85040471A	QUICK FASTENING M5	4			MOD:MS1200-A;XST:AUS,CHN,EUR,FRA,JAP,THAI	

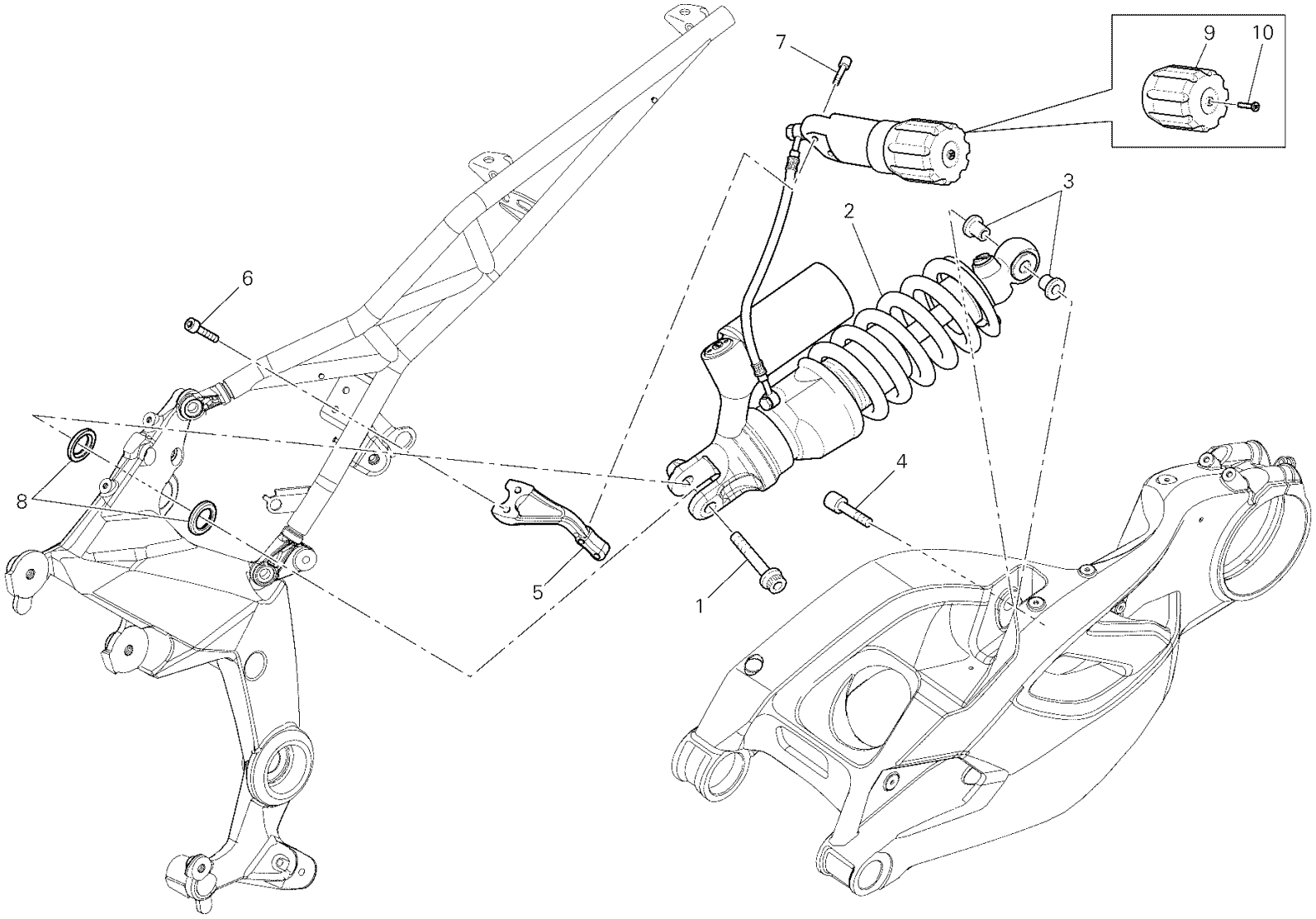

SOS00555

DRAWING 028 - REAR SHOCK ABSORBER [MOD:MS1200-A;XST:AUS,CHN,EUR,FRA,JAP,THAI]

GROUP FRAME

POS.	CODE	DESCRIPTION	QTY	START DATE	END DATE	VALIDITY	NOTES
1	77159378B	SCREW TCEIF M10X50X1.25	1	09/03/2012		MOD:MS1200-A;XST:AUS,CHN,EUR,FRA,JAP,THAI	
2	36521201A	REAR SHOCK ABSORBER	1	09/03/2012		MOD:MS1200-A;XST:AUS,CHN,EUR,FRA,JAP,THAI	
3	71011321A	BUSH 10X18X11	2	09/03/2012		MOD:MS1200-A;XST:AUS,CHN,EUR,FRA,JAP,THAI	
4	77915041A	SCREW	1	09/03/2012		MOD:MS1200-A;XST:AUS,CHN,EUR,FRA,JAP,THAI	
5	83015872C	BRACKET	1	09/03/2012		MOD:MS1200-A;XST:AUS,CHN,EUR,FRA,JAP,THAI	
6	77116648B	SCREW	2	09/03/2012		MOD:MS1200-A;XST:AUS,CHN,EUR,FRA,JAP,THAI	
7	77156698B	SCREW TCEIF M6X25	2	09/03/2012		MOD:MS1200-A;XST:AUS,CHN,EUR,FRA,JAP,THAI	
8	71510081B	SPACER	2	09/03/2012		MOD:MS1200-A;XST:AUS,CHN,EUR,FRA,JAP,THAI	
9	83510111A	SPACER	1	14/03/2012		MOD:MS1200-A;XST:AUS,CHN,EUR,FRA,JAP,THAI	
10	77550291A	SCREW M5X10 UNI 7687	1	14/03/2012		MOD:MS1200-A;XST:AUS,CHN,EUR,FRA,JAP,THAI	

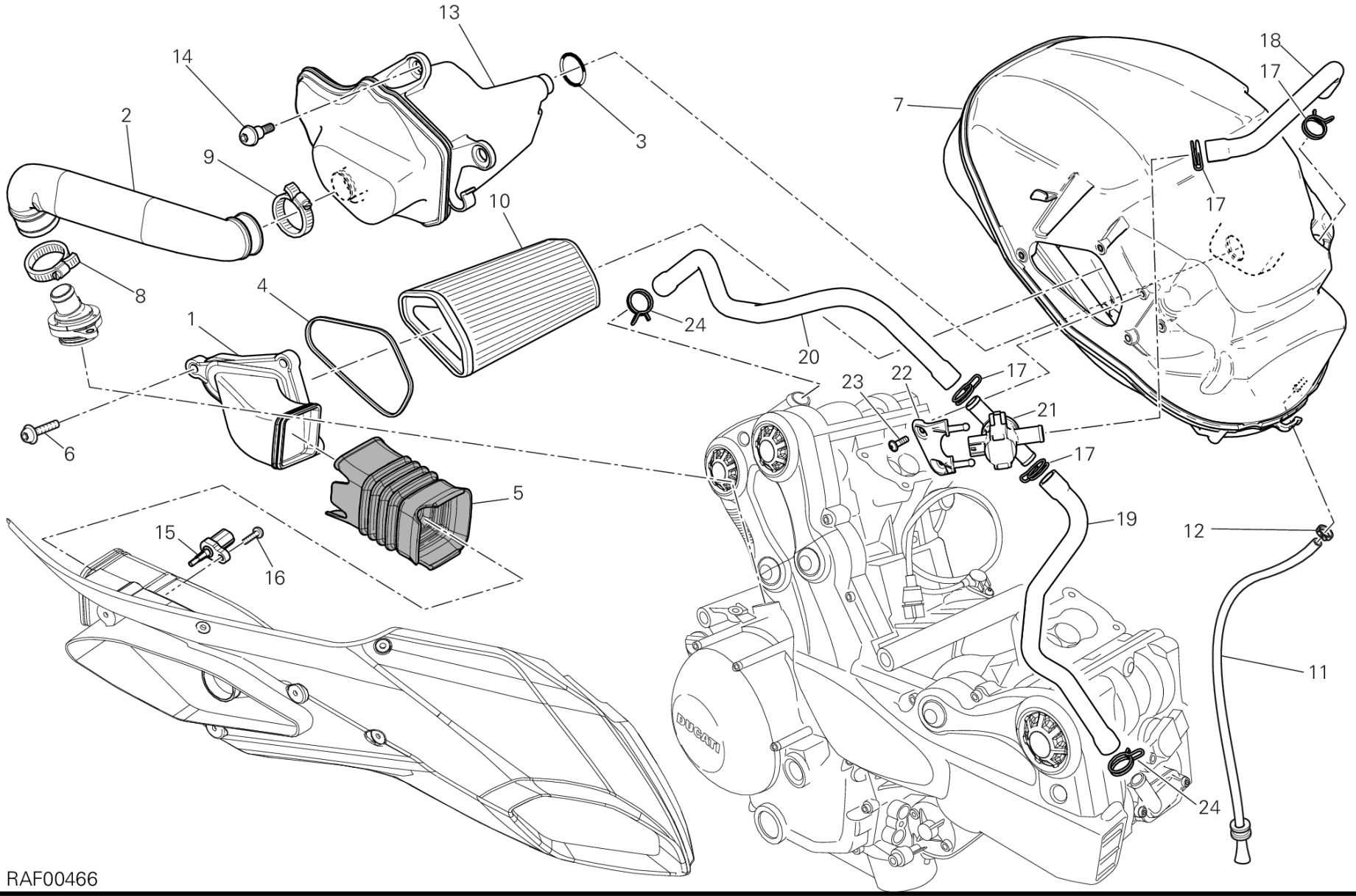

RAF00466

POS.	CODE	DESCRIPTION	QTY	START DATE	END DATE	VALIDITY	NOTES
1	48411061A	RIGHT AIR MANIFOLD	1	09/03/2012		MOD:MS1200-A;XST:AUS,CHN,EUR,FRA,JAP,THAI	
2	87611061A	BREATHER PIPE	1	09/03/2012		MOD:MS1200-A;XST:AUS,CHN,EUR,FRA,JAP,THAI	
3	88640891A	O-RING 18.64X3.53	1	09/03/2012		MOD:MS1200-A;XST:AUS,CHN,EUR,FRA,JAP,THAI	
4	78811121A	GASKET	1	09/03/2012		MOD:MS1200-A;XST:AUS,CHN,EUR,FRA,JAP,THAI	
5	80110361A	RUBBER SLEEVE	1	09/03/2012		MOD:MS1200-A;XST:AUS,CHN,EUR,FRA,JAP,THAI	
6	77210422A	SCREW	3	09/03/2012		MOD:MS1200-A;XST:AUS,CHN,EUR,FRA,JAP,THAI	
7	44212511A	AIR FILTER BOX	1	09/03/2012		MOD:MS1200-A;XST:AUS,CHN,EUR,FRA,JAP,THAI	
8	74141861A	CLAMP 20-32 MM	1	09/03/2012		MOD:MS1200-A;XST:AUS,CHN,EUR,FRA,JAP,THAI	
9	74141651A	CLAMP	1	09/03/2012		MOD:MS1200-A;XST:AUS,CHN,EUR,FRA,JAP,THAI	
10	42610201A	FILTER, AIR	1	09/03/2012		MOD:MS1200-A;XST:AUS,CHN,EUR,FRA,JAP,THAI	
11	59013131A	BREATHER PIPE	1	09/03/2012		MOD:MS1200-A;XST:AUS,CHN,EUR,FRA,JAP,THAI	
12	74140651A	CLAMP	1	09/03/2012		MOD:MS1200-A;XST:AUS,CHN,EUR,FRA,JAP,THAI	
13	58510671A	VENT TANK	1	09/03/2012		MOD:MS1200-A;XST:AUS,CHN,EUR,FRA,JAP,THAI	
14	77210853B	SCREW TCEI M5X9	2	09/03/2012		MOD:MS1200-A;XST:AUS,CHN,EUR,FRA,JAP,THAI	
15	55241581A	SENSOR, AIR TEMPERATURE	1	09/03/2012		MOD:MS1200-A;XST:AUS,CHN,EUR,FRA,JAP,THAI	
16	77510041A	SCREW TBEI M5X14	1	09/03/2012		MOD:MS1200-A;XST:AUS,CHN,EUR,FRA,JAP,THAI	
17	74142251A	CLAMP	4	01/06/2012		MOD:MS1200-A;XST:AUS,CHN,EUR,FRA,JAP,THAI	

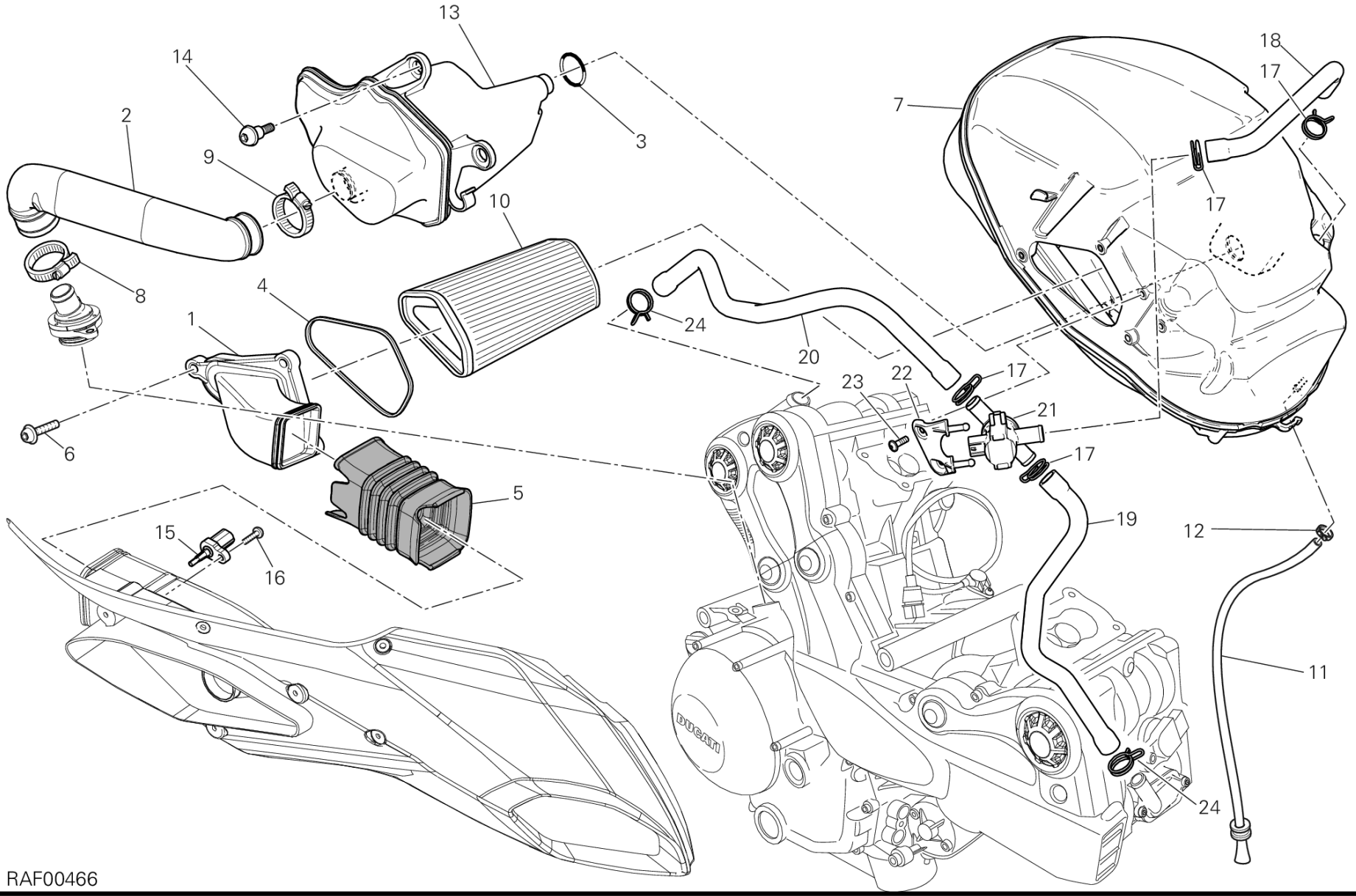

RAF00466

POS.	CODE	DESCRIPTION	QTY	START DATE	END DATE	VALIDITY	NOTES
18	87611141A	DUCT, AIR	1	09/03/2012		MOD:MS1200-A;XST:AUS,CHN,EUR,FRA,JAP,THAI	
19	87611163A	DUCT, AIR	1	01/06/2012		MOD:MS1200-A;XST:AUS,CHN,EUR,FRA,JAP,THAI	
20	87611152A	DUCT, AIR	1	01/06/2012		MOD:MS1200-A;XST:AUS,CHN,EUR,FRA,JAP,THAI	
21	65540091A	ACTUATOR	1	01/06/2012		MOD:MS1200-A;XST:AUS,CHN,EUR,FRA,JAP,THAI	
22	8291A781A	HOLDER	1	01/06/2012		MOD:MS1200-A;XST:AUS,CHN,EUR,FRA,JAP,THAI	
23	77440041A	SCREW, TAPPING M5X16	2	09/03/2012		MOD:MS1200-A;XST:AUS,CHN,EUR,FRA,JAP,THAI	
24	74142261A	CLAMP	2	09/03/2012		MOD:MS1200-A;XST:AUS,CHN,EUR,FRA,JAP,THAI	

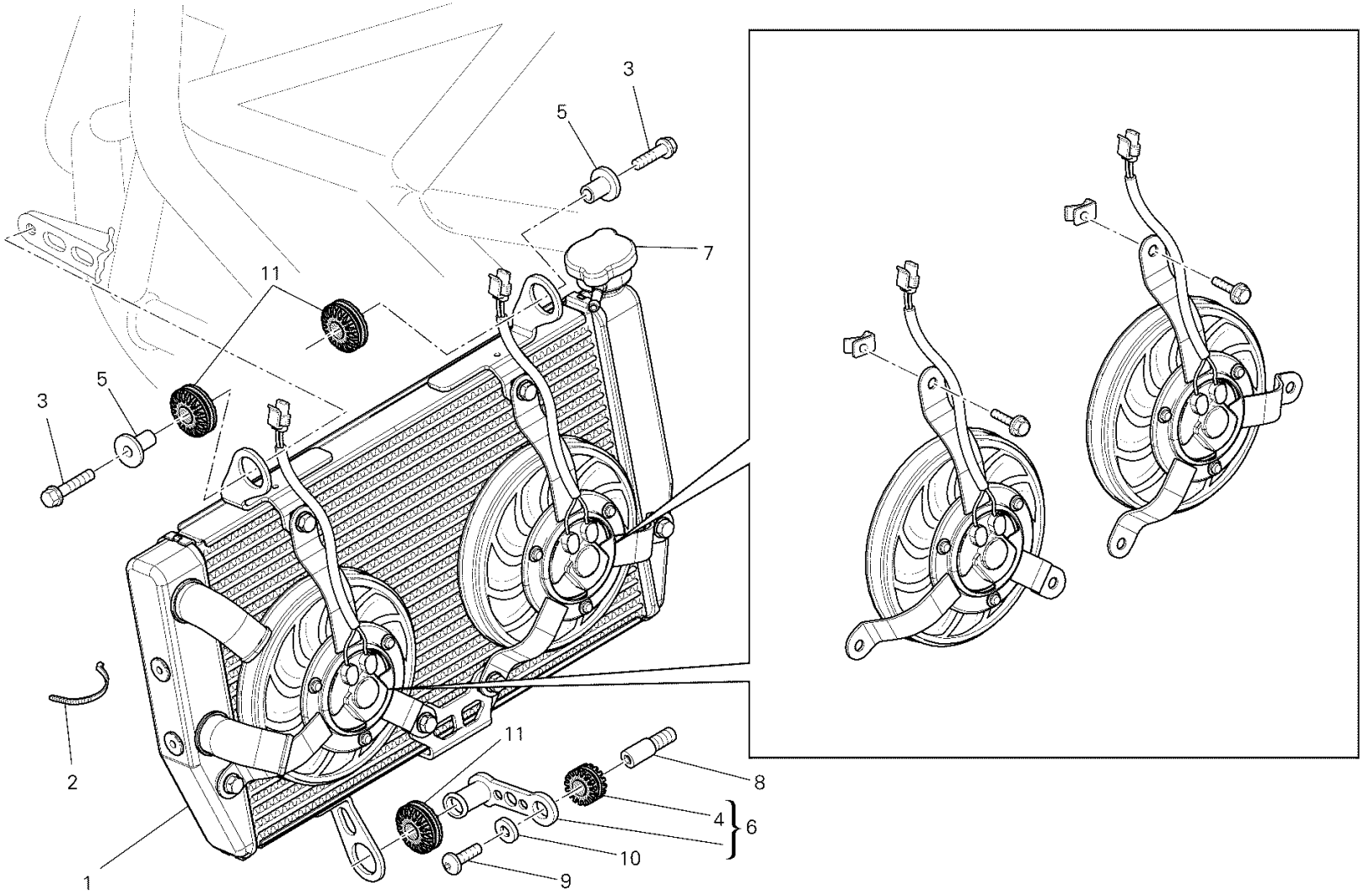
3
5
7
11
5
3
2
11
8
4
6
10
1
9

DRAWING 030 - WATER COOLER [MOD:MS1200-A;XST:AUS,EUR,FRA,JAP]

GROUP FRAME

POS.	CODE	DESCRIPTION	QTY	START DATE	END DATE	VALIDITY	NOTES
1	54840861C	WATER COOLER	1	09/03/2012		MOD:MS1200-A;XST:AUS,EUR,FRA,JAP	
2	74140381A	CLAMP	2	09/03/2012		MOD:MS1200-A;XST:AUS,EUR,FRA,JAP	
3	77250121B	SCREW TEF M6X22	2	09/03/2012		MOD:MS1200-A;XST:AUS,EUR,FRA,JAP	
4	76410241A	VIBRATION DAMPER PAD	1	09/03/2012		MOD:MS1200-A;XST:AUS,EUR,FRA,JAP	
5	71614191A	SPACER	2	09/03/2012		MOD:MS1200-A;XST:AUS,EUR,FRA,JAP	
6	83024041A	HOLDER	1	09/03/2012		MOD:MS1200-A;XST:AUS,EUR,FRA,JAP	
7	87240601A	RADIATOR CAP	1			MOD:MS1200-A;XST:AUS,EUR,FRA,JAP	
8	77916081A	SCREW, SPECIAL	1	09/03/2012		MOD:MS1200-A;XST:AUS,EUR,FRA,JAP	
9	77510351A	SCREW TBEI M5X14	1	09/03/2012	01/10/2012	MOD:MS1200-A;XST:AUS,EUR,FRA,JAP	
10	85241711A	WASHER 5.3X20X1.5	1	09/03/2012		MOD:MS1200-A;XST:AUS,EUR,FRA,JAP	
11	76411361A	VIBRATION DAMPER PAD	3	09/03/2012		MOD:MS1200-A;XST:AUS,EUR,FRA,JAP	

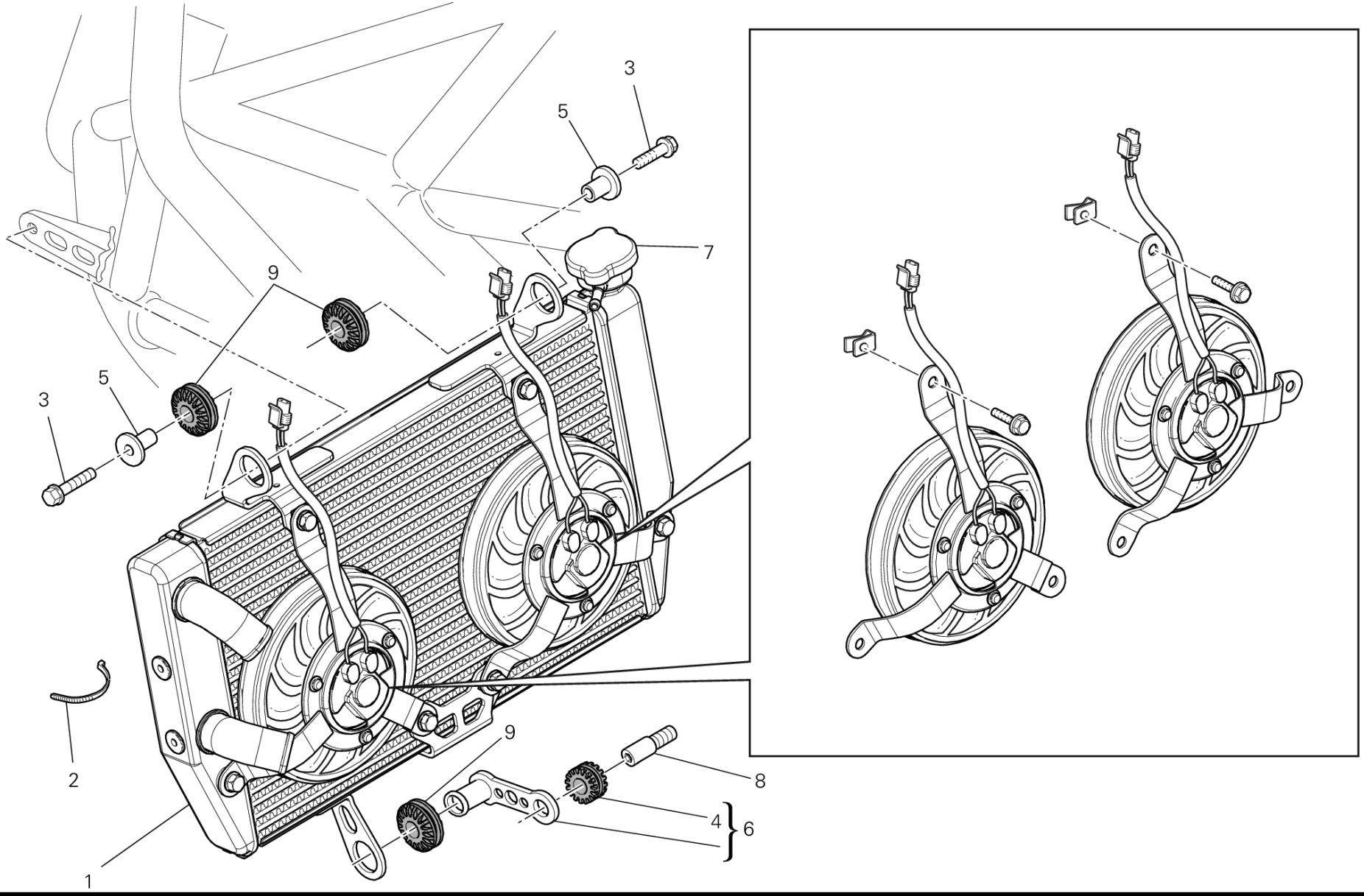
3
5
7
9
3
5
2
9
8
4
6
1

DRAWING 030 - WATER COOLER [MOD:MS1200-A;XST:CHN,THAI]

GROUP FRAME

POS.	CODE	DESCRIPTION	QTY	START DATE	END DATE	VALIDITY	NOTES
1	54840861C	WATER COOLER	1	09/03/2012		MOD:MS1200-A;XST:CHN,THAI	
2	74140381A	CLAMP	2	09/03/2012		MOD:MS1200-A;XST:CHN,THAI	
3	77250121B	SCREW TEF M6X22	2	09/03/2012		MOD:MS1200-A;XST:CHN,THAI	
4	76410241A	VIBRATION DAMPER PAD	1	09/03/2012		MOD:MS1200-A;XST:CHN,THAI	
5	71614191A	SPACER	2	09/03/2012		MOD:MS1200-A;XST:CHN,THAI	
6	83024041A	HOLDER	1	09/03/2012		MOD:MS1200-A;XST:CHN,THAI	
7	87240601A	RADIATOR CAP	1			MOD:MS1200-A;XST:CHN,THAI	
8	77916081A	SCREW, SPECIAL	1	09/03/2012		MOD:MS1200-A;XST:CHN,THAI	
9	76411361A	VIBRATION DAMPER PAD	3	09/03/2012		MOD:MS1200-A;XST:CHN,THAI	

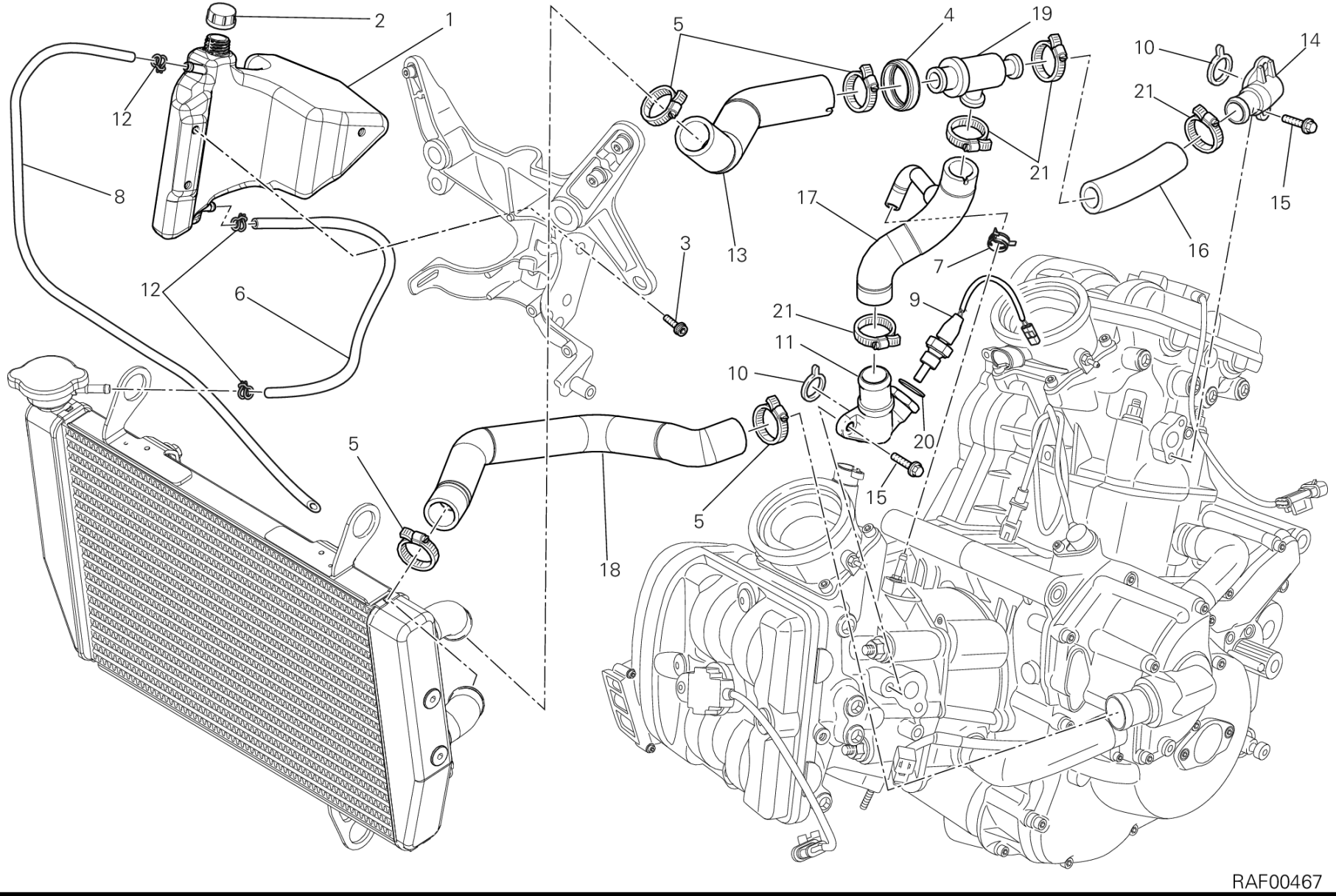

RAF00467

POS.	CODE	DESCRIPTION	QTY	START DATE	END DATE	VALIDITY	NOTES
1	58510701A	TANK, WATER RESERVOIR	1	24/12/2009		MOD:MS1200-A;XST:AUS,CHN,EUR,FRA,JAP,THAI	
2	89310143A	TANK CAP	1	01/01/2010		MOD:MS1200-A;XST:AUS,CHN,EUR,FRA,JAP,THAI	
3	77156628B	SCREW TCEIF M6X10	3	09/03/2012		MOD:MS1200-A;XST:AUS,CHN,EUR,FRA,JAP,THAI	
4	88110461A	THERMOSTAT PROTECTION RING	1	09/03/2012		MOD:MS1200-A;XST:AUS,CHN,EUR,FRA,JAP,THAI	
5	74141901A	CLAMP 20-35 MM	4	09/03/2012		MOD:MS1200-A;XST:AUS,CHN,EUR,FRA,JAP,THAI	
6	93410111A	PIPE	1	24/12/2009		MOD:MS1200-A;XST:AUS,CHN,EUR,FRA,JAP,THAI	
7	74140011A	CLAMP 12MM	1	09/03/2012		MOD:MS1200-A;XST:AUS,CHN,EUR,FRA,JAP,THAI	
8	93410131B	PIPE	1	24/12/2009		MOD:MS1200-A;XST:AUS,CHN,EUR,FRA,JAP,THAI	
9	55242671A	SENSOR, TEMPERATURE	1	16/05/2011		MOD:MS1200-A;XST:AUS,CHN,EUR,FRA,JAP,THAI	
10	88641031A	O-RING	2	29/06/2012		MOD:MS1200-A;XST:AUS,CHN,EUR,FRA,JAP,THAI	
11	81412361C	JOINT, WATER HOSE HORIZONTAL	1	16/05/2011		MOD:MS1200-A;XST:AUS,CHN,EUR,FRA,JAP,THAI	
12	8A0067610	CLAMP 11MM	3	24/12/2009		MOD:MS1200-A;XST:AUS,CHN,EUR,FRA,JAP,THAI	
13	80011631A	COOLER/THERMOSTAT HOSE	1	09/03/2012		MOD:MS1200-A;XST:AUS,CHN,EUR,FRA,JAP,THAI	
14	81412351B	JOINT, WATER HOSE VERTICAL	1	29/06/2012		MOD:MS1200-A;XST:AUS,CHN,EUR,FRA,JAP,THAI	
15	77210623B	SCREW	4	29/06/2012		MOD:MS1200-A;XST:AUS,CHN,EUR,FRA,JAP,THAI	
16	80011611A	THERMOSTAT/PUMP HOSE VERTICAL	1	09/03/2012		MOD:MS1200-A;XST:AUS,CHN,EUR,FRA,JAP,THAI	
17	80011601C	HOSE COOLING, THERMOSTAT HORIZONTAL HEAD	1	09/03/2012		MOD:MS1200-A;XST:AUS,CHN,EUR,FRA,JAP,THAI	

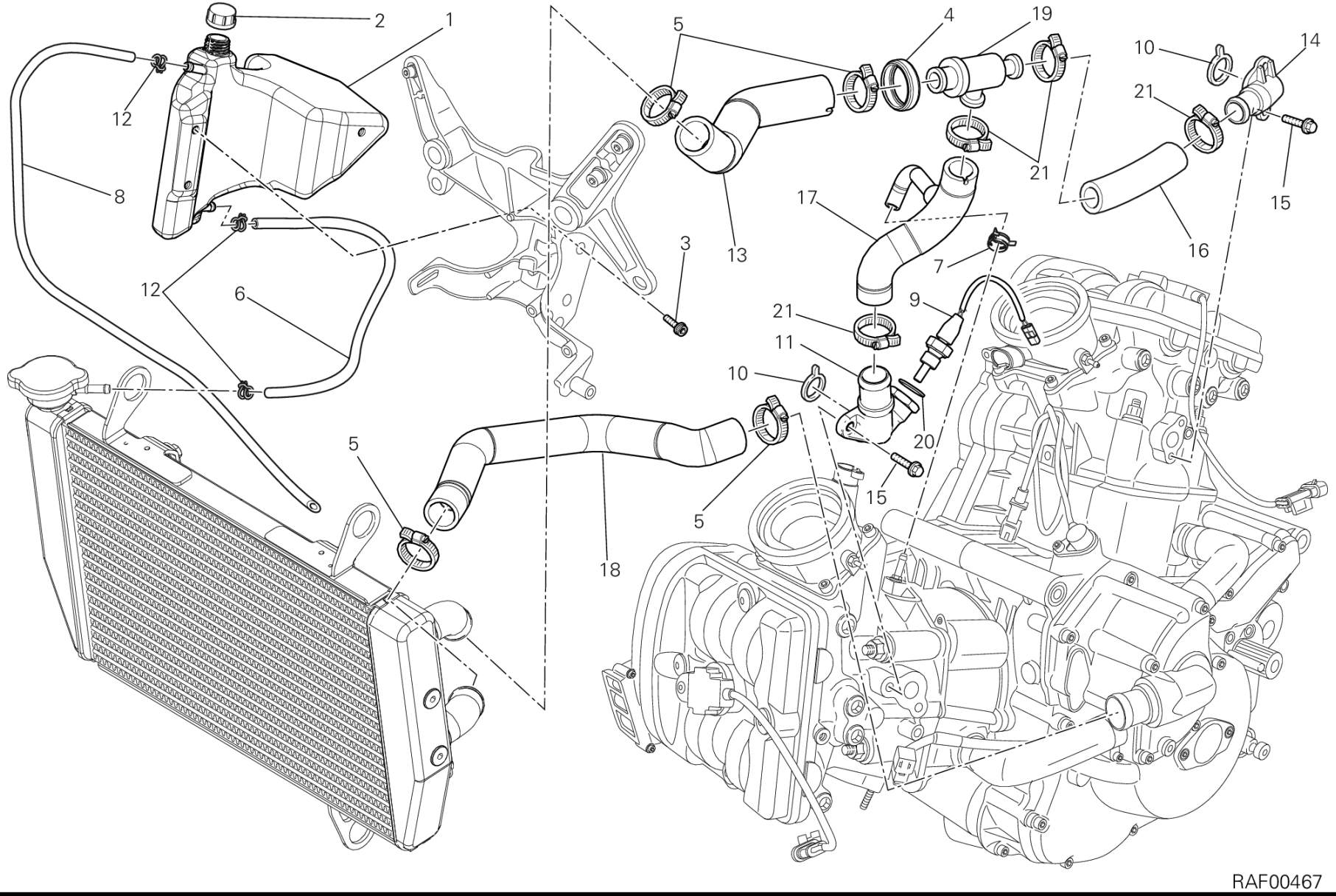

RAF00467

POS.	CODE	DESCRIPTION	QTY	START DATE	END DATE	VALIDITY	NOTES
18	80011591A	PUMP/COOLER HOSE	1	09/03/2012		MOD:MS1200-A;XST:AUS,CHN,EUR,FRA,JAP,THAI	
19	55340041A	THERMO-SWITCH	1	09/03/2012		MOD:MS1200-A;XST:AUS,CHN,EUR,FRA,JAP,THAI	
20	85250421A	COPPER GASKET 12.2X18X1.5 MM	1	16/05/2011		MOD:MS1200-A;XST:AUS,CHN,EUR,FRA,JAP,THAI	
21	74141921A	CLAMP 16-27 MM	4	16/05/2011		MOD:MS1200-A;XST:AUS,CHN,EUR,FRA,JAP,THAI	

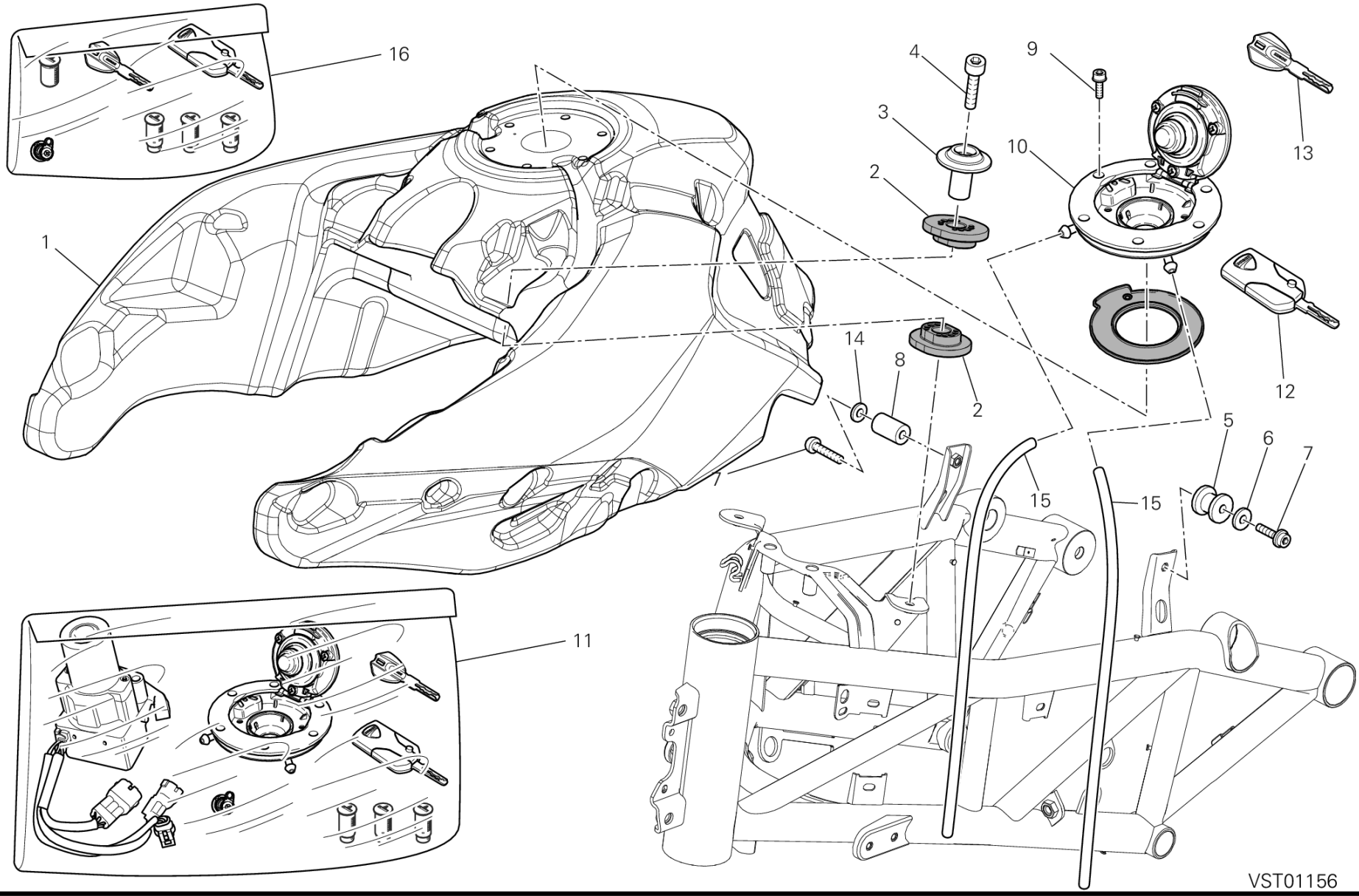
16
1
4
3
2
9
10
13
12
14
8
2
7
5
6
7
15
15
11
VST01156

POS.	CODE	DESCRIPTION	QTY	START DATE	END DATE	VALIDITY	NOTES
1	58611654A	FUEL TANK	1	09/03/2012		MOD:MS1200-A;XST:AUS,EUR,FRA,JAP,THAI	
2	86611091A	PAD	4	09/03/2012		MOD:MS1200-A;XST:AUS,EUR,FRA,JAP,THAI	
3	71319181A	SPACER	2	09/03/2012		MOD:MS1200-A;XST:AUS,EUR,FRA,JAP,THAI	
4	77354898B	SCREW TCEIR M6X30	2	09/03/2012		MOD:MS1200-A;XST:AUS,EUR,FRA,JAP,THAI	
5	86610951A	DAMPER	1	09/03/2012		MOD:MS1200-A;XST:AUS,EUR,FRA,JAP,THAI	
6	85211961B	WASHER 6.4X25X1.5	1	09/03/2012		MOD:MS1200-A;XST:AUS,EUR,FRA,JAP,THAI	
7	77240508C	SCREW	2	09/03/2012		MOD:MS1200-A;XST:AUS,EUR,FRA,JAP,THAI	
8	86610971A	RUBBER PAD	1	09/03/2012		MOD:MS1200-A;XST:AUS,EUR,FRA,JAP,THAI	
9	77150478B	SCREW TCEI M5X30	6	09/03/2012		MOD:MS1200-A;XST:AUS,EUR,FRA,JAP,THAI	
10	89510342B	TANK CAP	1	13/06/2012		MOD:MS1200-A;XST:AUS,EUR,FRA,JAP,THAI	
11	59820846A	HANDS FREE 868 MHZ KIT	1	20/06/2012		MOD:MS1200-A;XST:AUS,EUR,FRA,THAI	
	59820945A	KIT HANDS FREE 315 MHZ	1	17/07/2012		MOD:MS1200-A;XST:JAP	JAP
12	59810172B	WRENCH WITH TRANSPONDER 868 MHZ ACTIV	1	13/06/2012		MOD:MS1200-A;XST:AUS,EUR,FRA,THAI	
	59810182B	WRENCH WITH TRANSPONDER 315 MHZ ACTIV	1	16/03/2011		MOD:MS1200-A;XST:JAP	JAP
13	59840311B	WRENCH WITH TRANSPONDER PASSIVE	1	13/06/2012		MOD:MS1200-A;XST:AUS,EUR,FRA,JAP,THAI	
14	85211911A	WASHER 6.4X16X1.5	1	09/03/2012		MOD:MS1200-A;XST:AUS,EUR,FRA,JAP,THAI	
15	59040051A	HOSE 5.5X9.5	2	09/03/2012		MOD:MS1200-A;XST:AUS,EUR,FRA,JAP,THAI	
16	59820671B	ROTORS WRENCH KIT	1	13/06/2012		MOD:MS1200-A;XST:AUS,EUR,FRA,JAP,THAI	

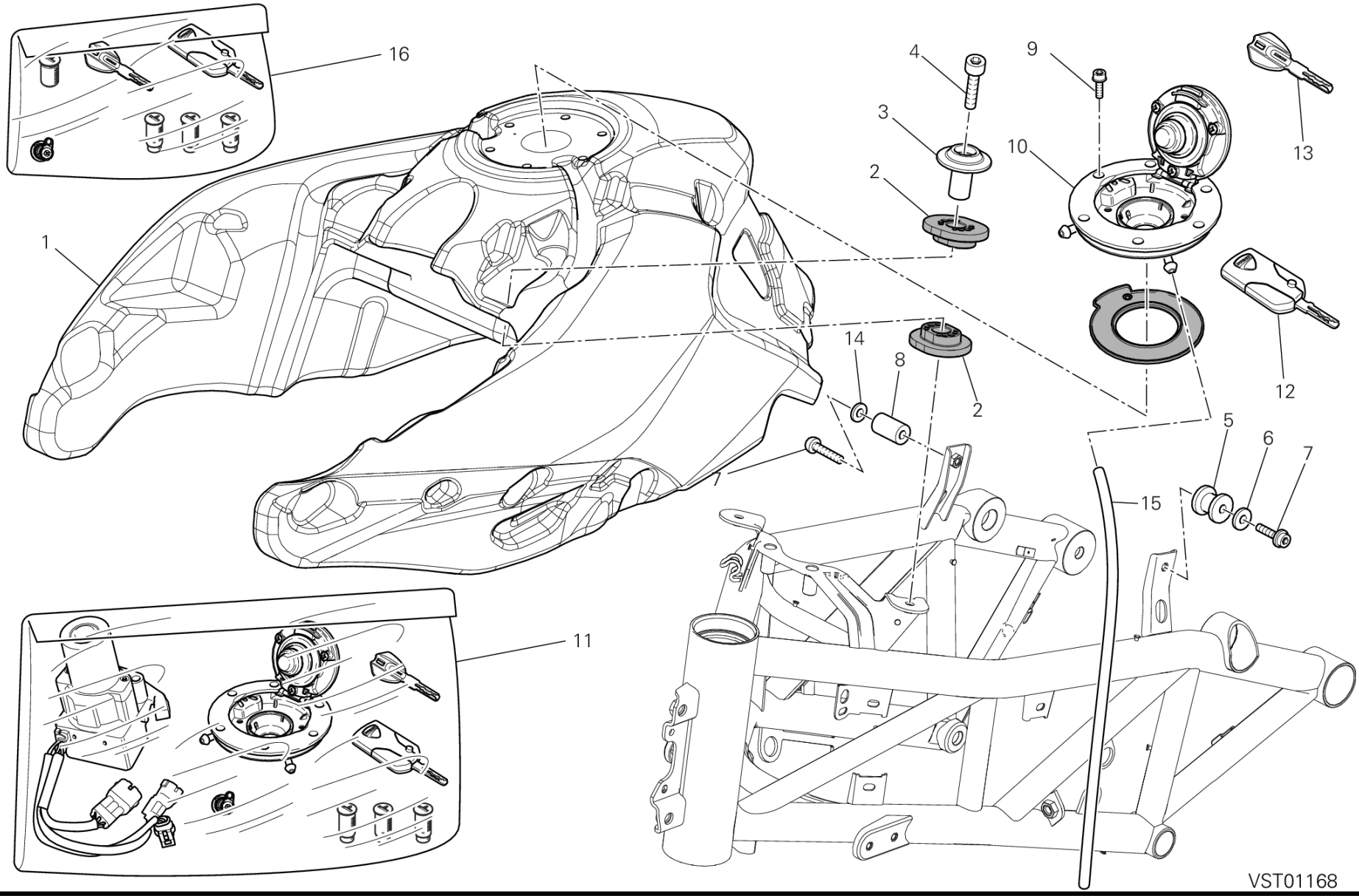
16
1
4
3
2
9
10
13
12
14
8
2
7
5
6
7
15
11
VST01168

DRAWING 032 - FUEL TANK [MOD:MS1200-A;XST:CHN]

GROUP FRAME

POS.	CODE	DESCRIPTION	QTY	START DATE	END DATE	VALIDITY	NOTES
1	58611903A	TANK	1	09/03/2012		MOD:MS1200-A;XST:CHN	
2	86611091A	PAD	4	09/03/2012		MOD:MS1200-A;XST:CHN	
3	71319181A	SPACER	2	09/03/2012		MOD:MS1200-A;XST:CHN	
4	77354898B	SCREW TCEIR M6X30	2	09/03/2012		MOD:MS1200-A;XST:CHN	
5	86610951A	DAMPER	1	09/03/2012		MOD:MS1200-A;XST:CHN	
6	85211961B	WASHER 6.4X25X1.5	1	09/03/2012		MOD:MS1200-A;XST:CHN	
7	77240508C	SCREW	2	09/03/2012		MOD:MS1200-A;XST:CHN	
8	86610971A	RUBBER PAD	1	09/03/2012		MOD:MS1200-A;XST:CHN	
9	77150478B	SCREW TCEI M5X30	6	09/03/2012		MOD:MS1200-A;XST:CHN	
10	89510342B	TANK CAP	1	13/06/2012		MOD:MS1200-A;XST:CHN	
11	59820846A	HANDS FREE 868 MHZ KIT	1	20/06/2012		MOD:MS1200-A;XST:CHN	
12	59810172B	WRENCH WITH TRANSPONDER 868 MHZ ACTIV	1	13/06/2012		MOD:MS1200-A;XST:CHN	
13	59840311B	WRENCH WITH TRANSPONDER PASSIVE	1	13/06/2012		MOD:MS1200-A;XST:CHN	
14	85211911A	WASHER 6.4X16X1.5	1	09/03/2012		MOD:MS1200-A;XST:CHN	
15	59040051A	HOSE 5.5X9.5	1	09/03/2012		MOD:MS1200-A;XST:CHN	
16	59820671B	ROTORS WRENCH KIT	1	13/06/2012		MOD:MS1200-A;XST:CHN	

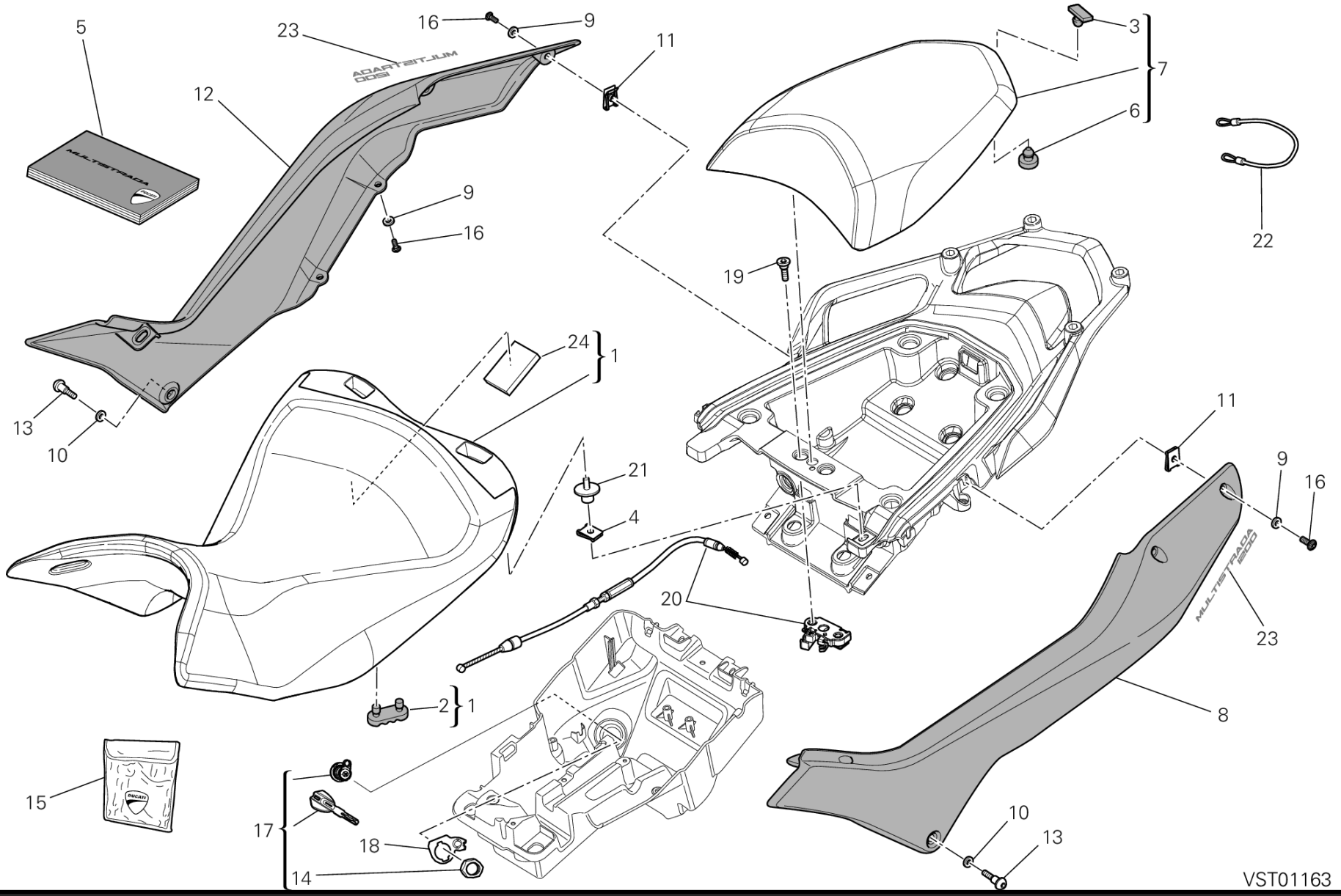
5
23
16
9
11
3
7
6
12
9
16
22
19
24
1
13
10
21
4
11
9
16
20
23
2
1
8
15
17
18
14
10
13
VST01163

DRAWING 033 - SEAT [MOD:MS1200-A;XST:AUS,CHN,EUR,FRA,JAP,THAI]

GROUP FRAME

POS.	CODE	DESCRIPTION	QTY	START DATE	END DATE	VALIDITY	NOTES
1	59511751A	SEAT	1	09/03/2012		MOD:MS1200-A;XST:AUS,CHN,EUR,FRA,THAI	
	59511791A	SEAT LOW	1	09/03/2012		MOD:MS1200-A;XST:JAP	JAP
2	86610191A	CUSHION, SEAT	2	28/05/2012		MOD:MS1200-A;XST:AUS,CHN,EUR,FRA,JAP,THAI	
3	86610301A	PAD	2	01/03/2011		MOD:MS1200-A;XST:AUS,CHN,EUR,FRA,JAP,THAI	
4	85040381A	QUICK FASTENING	1	09/03/2012		MOD:MS1200-A;XST:AUS,CHN,EUR,FRA,JAP,THAI	
5	91372031A	OWNER'S MANUAL	1	01/10/2012		MOD:MS1200-A;XST:EUR,FRA	I-GB-F-D
	91372031B	OWNER'S MANUAL	1	01/10/2012		MOD:MS1200-A;XST:EUR,FRA,JAP	GB-E-F-J
	91372031C	OWNER'S MANUAL	1			MOD:MS1200-A;XST:EUR	E-P-GR
	91372031D	OWNER'S MANUAL	1			MOD:MS1200-A;XST:CHN,EUR,FRA	F-NL-CN
	91372031E	OWNER'S MANUAL	1			MOD:MS1200-A;XST:EUR	S-FIN-DK-N
	91372031F	OWNER'S MANUAL	1			MOD:MS1200-A;XST:EUR	PL-CZ-SK-SLO
	91372031G	OWNER'S MANUAL	1			MOD:MS1200-A;XST:EUR	H-RO-BG-RUS
	91372031T	OWNER'S MANUAL	1			MOD:MS1200-A;XST:EUR	GB-KR-T
	91372031W	OWNER'S MANUAL	1			MOD:MS1200-A;XST:CHN	CN-TW
6	86610611A	RUBBER PAD	6	01/03/2011		MOD:MS1200-A;XST:AUS,CHN,EUR,FRA,JAP,THAI	
7	59511761A	PILLION RIDER SEAT	1	09/03/2012		MOD:MS1200-A;XST:AUS,CHN,EUR,FRA,JAP,THAI	
8	48211631AC	COVER , FRAME LH	1	09/03/2012		MOD:MS1200-A;XST:AUS,CHN,EUR,FRA,JAP,THAI	MATT CHROME
	48211631AD	COVER , FRAME LH	1	09/03/2012		MOD:MS1200-A;XST:AUS,CHN,EUR,FRA,JAP,THAI	ROSSO-RED-ROUGE-ROT-ROJO
9	85611361A	WASHER	8	09/03/2012		MOD:MS1200-A;XST:AUS,CHN,EUR,FRA,JAP,THAI	
10	85212181A	WASHER, NYLON 9X14X1	4	09/03/2012		MOD:MS1200-A;XST:AUS,CHN,EUR,FRA,JAP,THAI	
11	85040471A	QUICK FASTENING M5	8	09/03/2012		MOD:MS1200-A;XST:AUS,CHN,EUR,FRA,JAP,THAI	
12	48211621AC	COVER , FRAME RH	1	09/03/2012		MOD:MS1200-A;XST:AUS,CHN,EUR,FRA,JAP,THAI	MATT CHROME

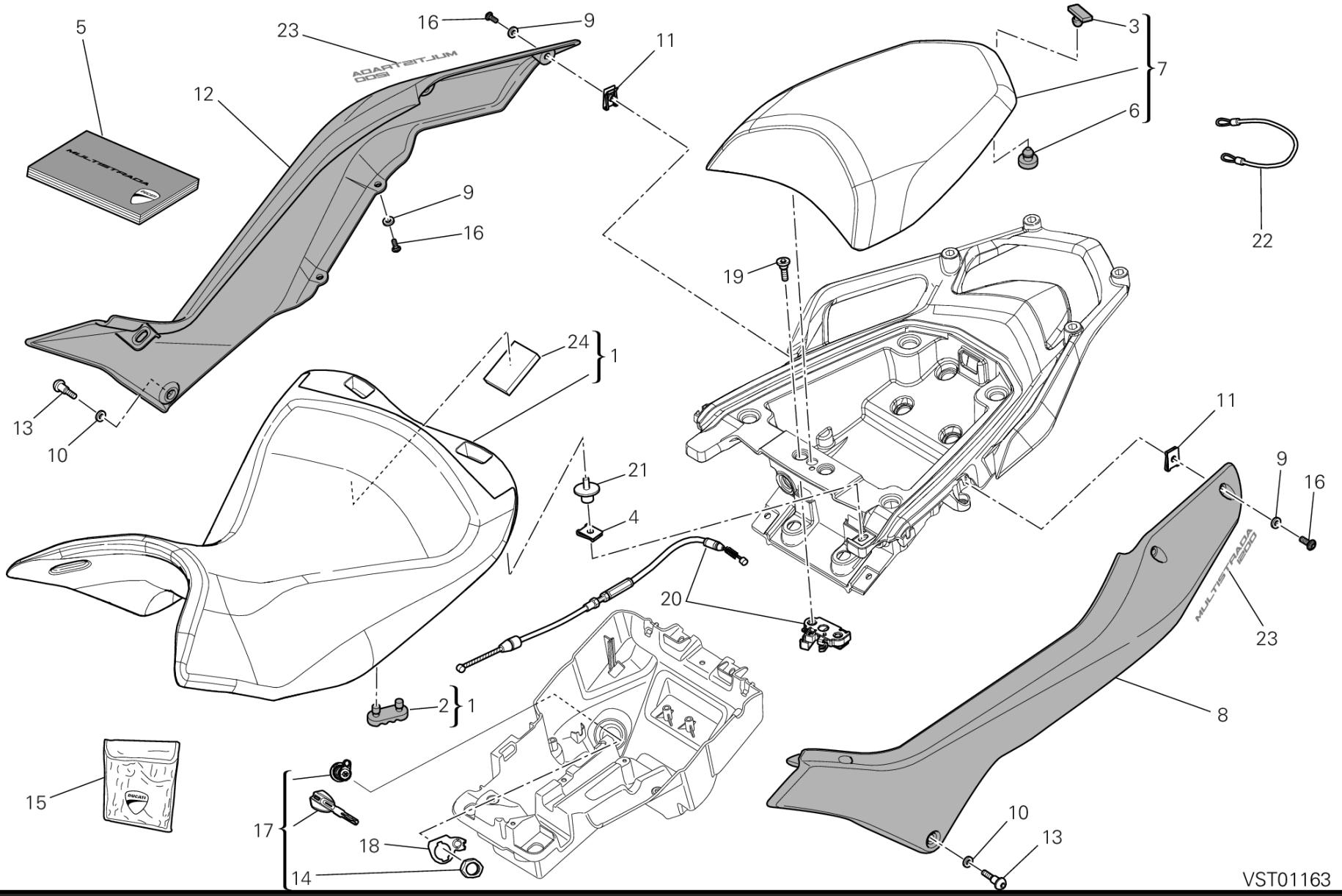
5
23
16
9
11
3
7
6
12
9
16
22
19
24
1
13
10
21
4
11
9
16
20
23
2
1
8
15
17
18
14
10
13
VST01163

POS.	CODE	DESCRIPTION	QTY	START DATE	END DATE	VALIDITY	NOTES
	48211621AD	COVER , FRAME RH	1	09/03/2012		MOD:MS1200-A;XST:AUS,CHN,EUR,FRA,JAP,THAI	ROSSO-RED-ROUGE-ROT-ROJO
13	77210853B	SCREW TCEI M5X9	4	09/03/2012		MOD:MS1200-A;XST:AUS,CHN,EUR,FRA,JAP,THAI	
14	75011551A	NUT M22X1.5	1	09/03/2012		MOD:MS1200-A;XST:AUS,CHN,EUR,FRA,JAP,THAI	
15	69720271A	TOOL BAG	1	09/03/2012		MOD:MS1200-A;XST:AUS,CHN,EUR,FRA,JAP,THAI	
16	77211091C	SCREW	8	09/03/2012		MOD:MS1200-A;XST:AUS,CHN,EUR,FRA,JAP,THAI	
17	59840271A	SEAT LOCK	1	16/03/2011		MOD:MS1200-A;XST:AUS,CHN,EUR,FRA,JAP,THAI	
18	82714821A	PLATE	1	09/03/2012		MOD:MS1200-A;XST:AUS,CHN,EUR,FRA,JAP,THAI	
19	77914982B	SCREW, SPECIAL	2	09/03/2012		MOD:MS1200-A;XST:AUS,CHN,EUR,FRA,JAP,THAI	
20	59810121A	LOCK LATCH	1	09/03/2012		MOD:MS1200-A;XST:AUS,CHN,EUR,FRA,JAP,THAI	
21	82113901A	PIN	1	09/03/2012		MOD:MS1200-A;XST:AUS,CHN,EUR,FRA,JAP,THAI	
22	73210201A	ANTI-THEFT CABLE	1	09/03/2012		MOD:MS1200-A;XST:AUS,CHN,EUR,FRA,JAP,THAI	
23	43512911A	STICKER "MULTISTRADA 1200"	2	09/03/2012		MOD:MS1200-A;XST:AUS,CHN,EUR,FRA,JAP,THAI	
24	86611251A	PAD	1	28/05/2012		MOD:MS1200-A;XST:AUS,CHN,EUR,FRA,JAP,THAI	

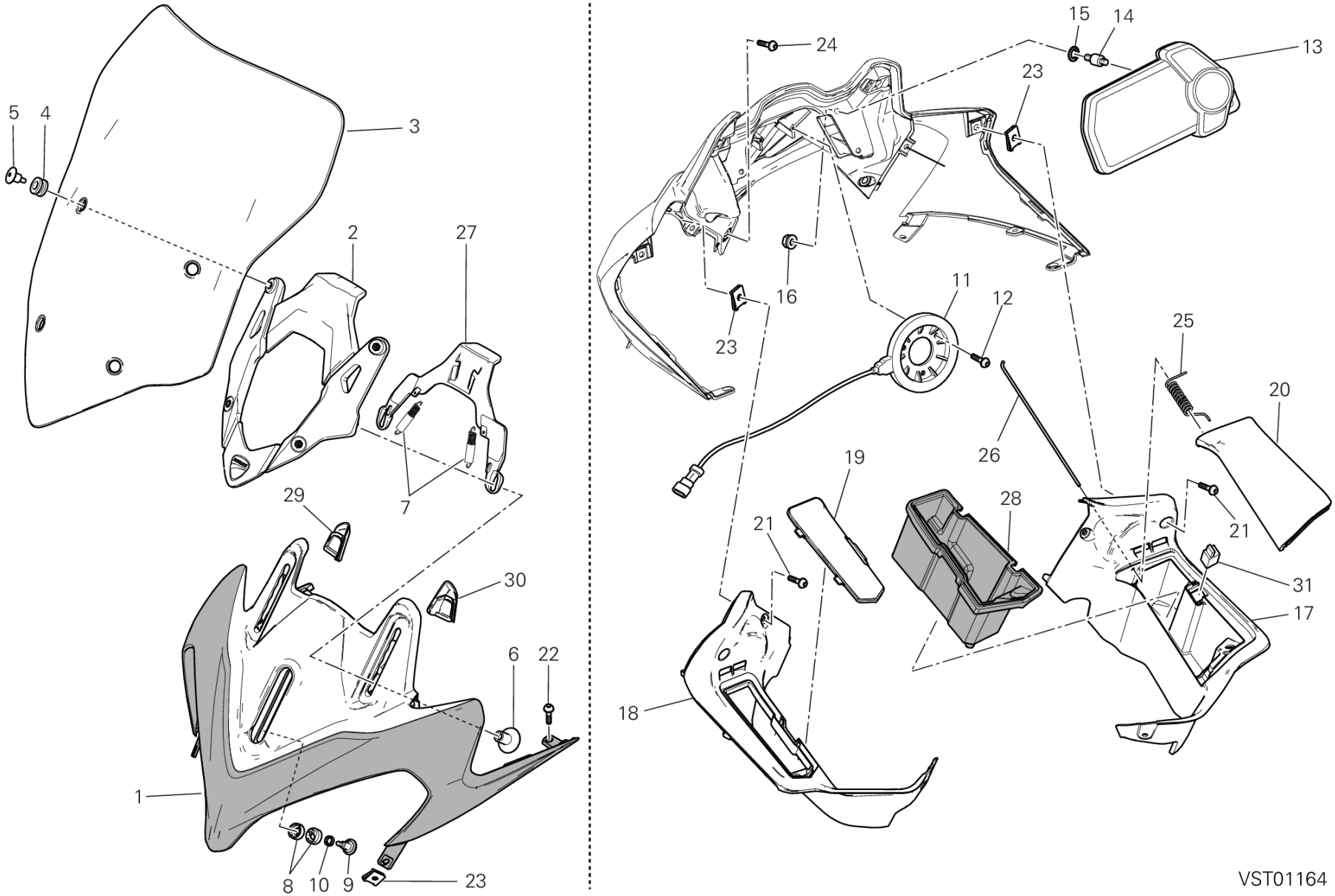
5
4
3
2
27
29
7
30
6
22
1
8
10
9
23
24
15
14
13
23
16
23
11
12
25
20
19
26
21
28
21
31
17
18
VST01164

POS.	CODE	DESCRIPTION	QTY	START DATE	END DATE	VALIDITY	NOTES
1	48110802AA	COWLING	1	01/10/2012		MOD:MS1200-A;XST:AUS,CHN,EUR,FRA,JAP,THAI	ROSSO-RED-ROUGE-ROT-ROJO
	48110802AC	COWLING	1	01/10/2012		MOD:MS1200-A;XST:AUS,CHN,EUR,FRA,JAP,THAI	MATT CHROME
2	8291A812A	STAY, WINDSHIELD	1	09/03/2012		MOD:MS1200-A;XST:AUS,CHN,EUR,FRA,JAP,THAI	
3	48710611A	WINDSHIELD	1	09/03/2012		MOD:MS1200-A;XST:AUS,CHN,EUR,FRA,JAP,THAI	
4	76411651A	RUBBER PAD	4	09/03/2012		MOD:MS1200-A;XST:AUS,CHN,EUR,FRA,JAP,THAI	
5	77917622AA	SCREW, SPECIAL	4	01/10/2012		MOD:MS1200-A;XST:AUS,CHN,EUR,FRA,JAP,THAI	
6	77917351BA	SCREW, SPECIAL	2	09/03/2012		MOD:MS1200-A;XST:AUS,CHN,EUR,FRA,JAP,THAI	
7	79925643AB	SPRING	2	09/03/2012		MOD:MS1200-A;XST:AUS,CHN,EUR,FRA,JAP,THAI	
8	44710841A	BUSH	2	09/03/2012		MOD:MS1200-A;XST:AUS,CHN,EUR,FRA,JAP,THAI	
9	77211171A	SCREW, SPECIAL	1	09/03/2012		MOD:MS1200-A;XST:AUS,CHN,EUR,FRA,JAP,THAI	
10	86611131A	RUBBER PAD	1	09/03/2012		MOD:MS1200-A;XST:AUS,CHN,EUR,FRA,JAP,THAI	
11	51840091A	COIL ANTENNA, IMMOBILIZER	1	09/03/2012		MOD:MS1200-A;XST:AUS,CHN,EUR,FRA,JAP,THAI	
12	77450151A	SCREW	2	09/03/2012		MOD:MS1200-A;XST:AUS,CHN,EUR,FRA,JAP,THAI	
13	40610964A	INSTRUMENT PANEL	1	09/03/2012		MOD:MS1200-A;XST:AUS,CHN,EUR,FRA,JAP,THAI	
14	70010431A	DAMPER	3	09/03/2012		MOD:MS1200-A;XST:AUS,CHN,EUR,FRA,JAP,THAI	
15	46240461A	WASHER, SPRING	3	09/03/2012		MOD:MS1200-A;XST:AUS,CHN,EUR,FRA,JAP,THAI	
16	74840381A	NUT M5	3	09/03/2012		MOD:MS1200-A;XST:AUS,CHN,EUR,FRA,JAP,THAI	

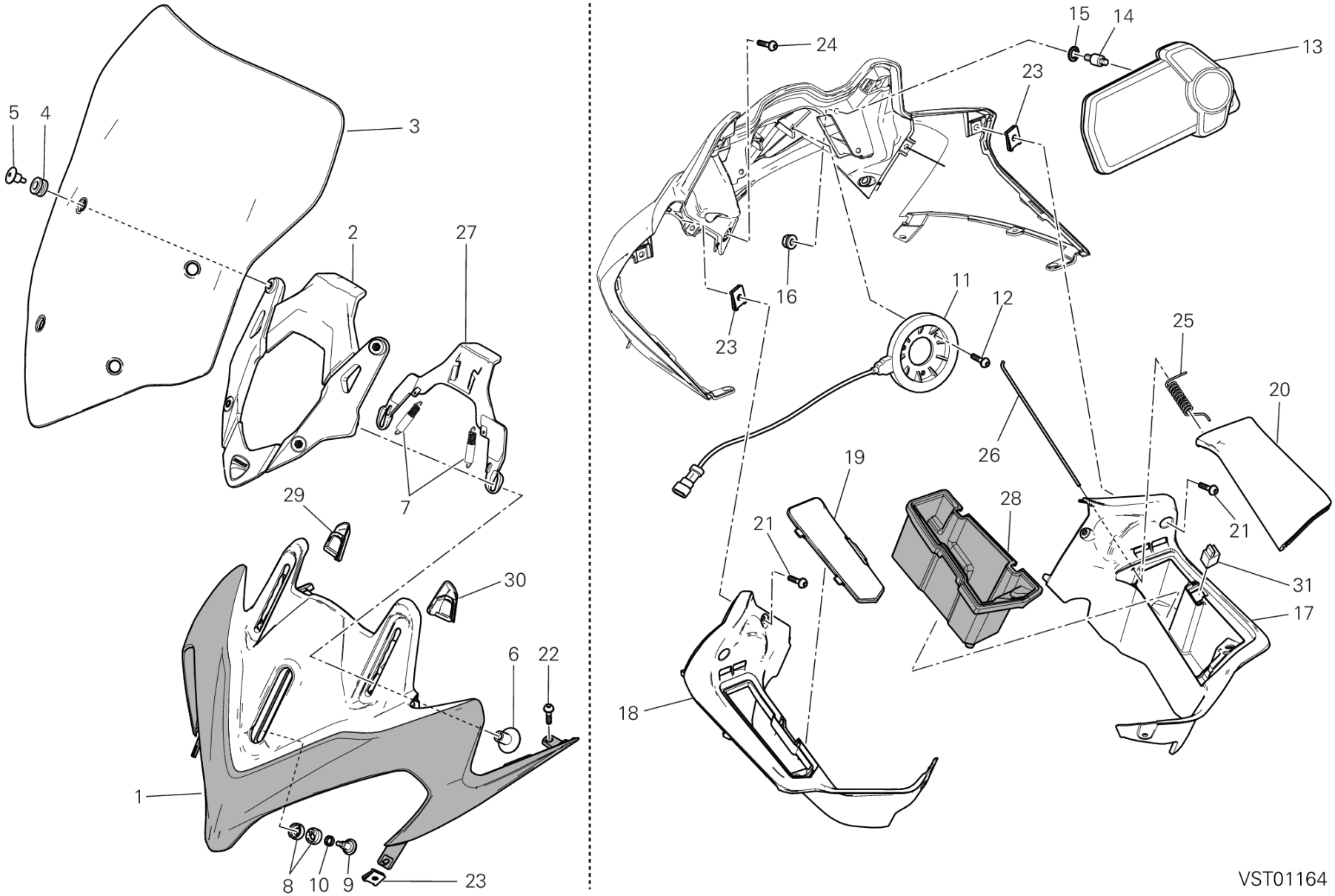
5
4
3
2
27
29
7
30
6
22
1
8
10
9
23
24
15
14
13
23
16
23
11
12
25
20
19
26
21
28
21
31
17
18
VST01164

POS.	CODE	DESCRIPTION	QTY	START DATE	END DATE	VALIDITY	NOTES
17	48110831A	COVER, BODY COWL RH	1	09/03/2012		MOD:MS1200-A;XST:AUS,CHN,EUR,FRA,JAP,THAI	
18	48110821A	COVER, BODY COWL LH	1	09/03/2012		MOD:MS1200-A;XST:AUS,CHN,EUR,FRA,JAP,THAI	
19	48110912A	LEFT COVER	1	01/10/2012		MOD:MS1200-A;XST:AUS,CHN,EUR,FRA,JAP,THAI	
20	48110862A	RIGHT COVER	1	01/10/2012		MOD:MS1200-A;XST:AUS,CHN,EUR,FRA,JAP,THAI	
21	77211091C	SCREW	4	09/03/2012		MOD:MS1200-A;XST:AUS,CHN,EUR,FRA,JAP,THAI	
22	77210841B	SCREW	2	09/03/2012		MOD:MS1200-A;XST:AUS,CHN,EUR,FRA,JAP,THAI	
23	85040471A	QUICK FASTENING M5	6	09/03/2012		MOD:MS1200-A;XST:AUS,CHN,EUR,FRA,JAP,THAI	
24	77211181A	SCREW, SPECIAL	4	09/03/2012		MOD:MS1200-A;XST:AUS,CHN,EUR,FRA,JAP,THAI	
25	79915731A	SPRING	1	23/07/2012		MOD:MS1200-A;XST:AUS,CHN,EUR,FRA,JAP,THAI	
26	82114391B	PIN	1	09/03/2012		MOD:MS1200-A;XST:AUS,CHN,EUR,FRA,JAP,THAI	
27	8291A822A	HOLDER	1	09/03/2012		MOD:MS1200-A;XST:AUS,CHN,EUR,FRA,JAP,THAI	
28	86611571A	CARPET	1	08/05/2012		MOD:MS1200-A;XST:AUS,CHN,EUR,FRA,JAP,THAI	
29	24714522A	RIGHT COVER	1	09/03/2012		MOD:MS1200-A;XST:AUS,CHN,EUR,FRA,JAP,THAI	
30	24714532A	LEFT COVER	1	09/03/2012		MOD:MS1200-A;XST:AUS,CHN,EUR,FRA,JAP,THAI	
31	59940021A	LOCK	1	09/03/2012		MOD:MS1200-A;XST:AUS,CHN,EUR,FRA,JAP,THAI	

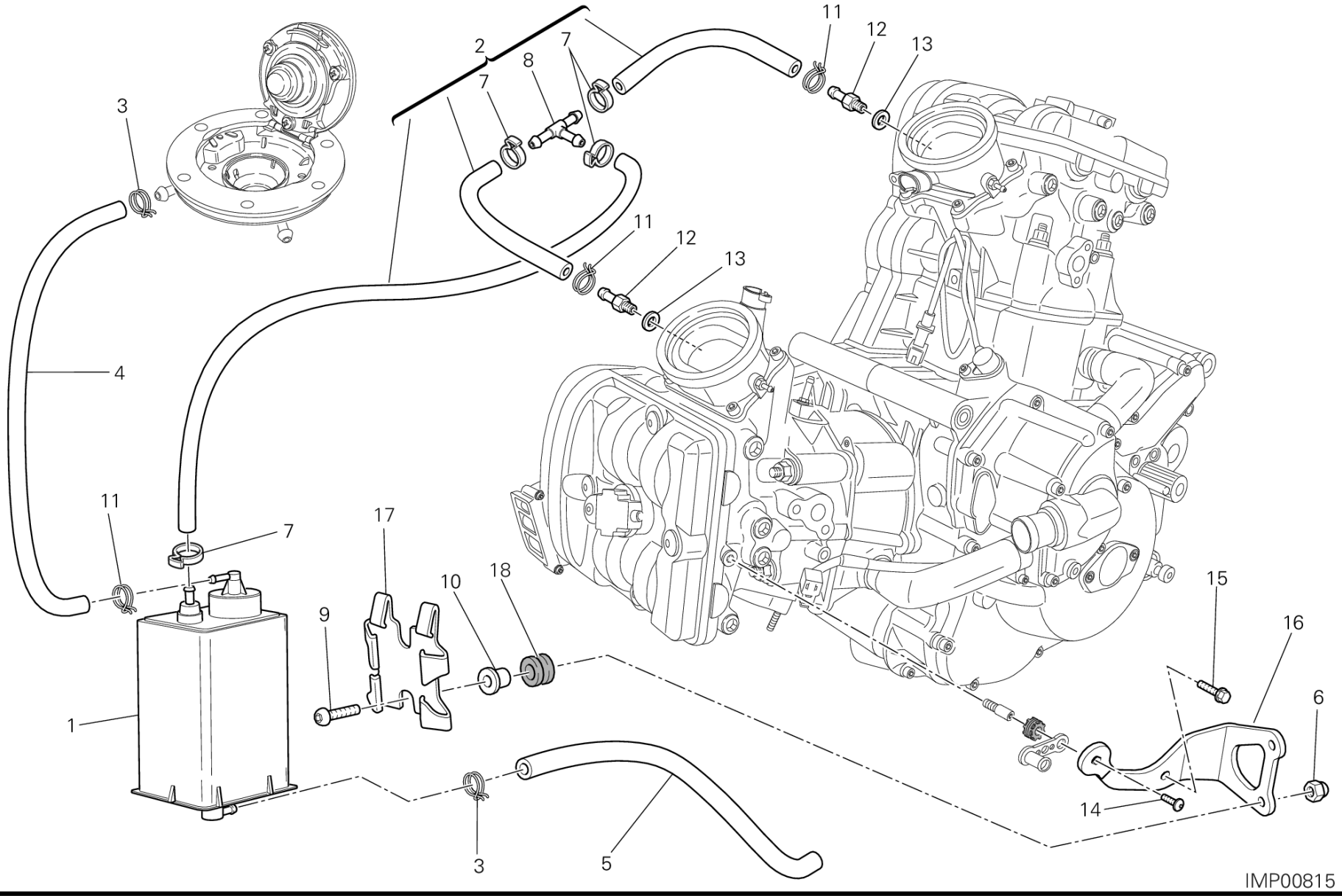
11
12
13
2
7
8
7
3
11
12
13
4
11
7
17
10
18
9
15
16
6
1
14
3
5
IMP00815

DRAWING 036 - CANISTER FILTER [MOD:MS1200-A;XST:CHN,THAI]

GROUP FRAME

POS.	CODE	DESCRIPTION	QTY	START DATE	END DATE	VALIDITY	NOTES
1	42610071A	CANISTER FILTER	1	24/12/2009		MOD:MS1200-A;XST:CHN,THAI	
2	59023491A	COMPLETE PIPE SET	1	09/03/2012		MOD:MS1200-A;XST:CHN,THAI	
3	74140571A	CLAMP	2	09/03/2012		MOD:MS1200-A;XST:CHN,THAI	
4	59013101A	HOSE 4X9X280	2	24/12/2009		MOD:MS1200-A;XST:CHN,THAI	
5	59013091B	PIPE	1	24/12/2009		MOD:MS1200-A;XST:CHN,THAI	
6	74910021A	NUT, CAP M6	2	09/03/2012		MOD:MS1200-A;XST:CHN,THAI	
7	74140581A	CLAMP	4	09/03/2012		MOD:MS1200-A;XST:CHN,THAI	
8	81411831A	THREE-WAYS UNION	1	24/12/2009		MOD:MS1200-A;XST:CHN,THAI	
9	77550271A	SCREW	2	09/03/2012		MOD:MS1200-A;XST:CHN,THAI	
10	71610431C	SPACER	2	09/03/2012		MOD:MS1200-A;XST:CHN,THAI	
11	74140431A	CLAMP	3	09/03/2012		MOD:MS1200-A;XST:CHN,THAI	
12	81411113B	NIPPLE, HOSE	2	28/09/2011		MOD:MS1200-A;XST:CHN,THAI	
13	85250231A	GASKET	2	03/04/2012		MOD:MS1200-A;XST:CHN,THAI	
14	77510171A	SCREW TBEI M5X16	1	09/03/2012		MOD:MS1200-A;XST:CHN,THAI	
15	77250978B	SCREW TEF M6X12	1	09/03/2012		MOD:MS1200-A;XST:CHN,THAI	
16	8291A791A	BRACKET	1	09/03/2012		MOD:MS1200-A;XST:CHN,THAI	
17	82711571A	PLATE	1	09/03/2012		MOD:MS1200-A;XST:CHN,THAI	
18	76410291A	RUBBER PAD	2	09/03/2012		MOD:MS1200-A;XST:CHN,THAI	

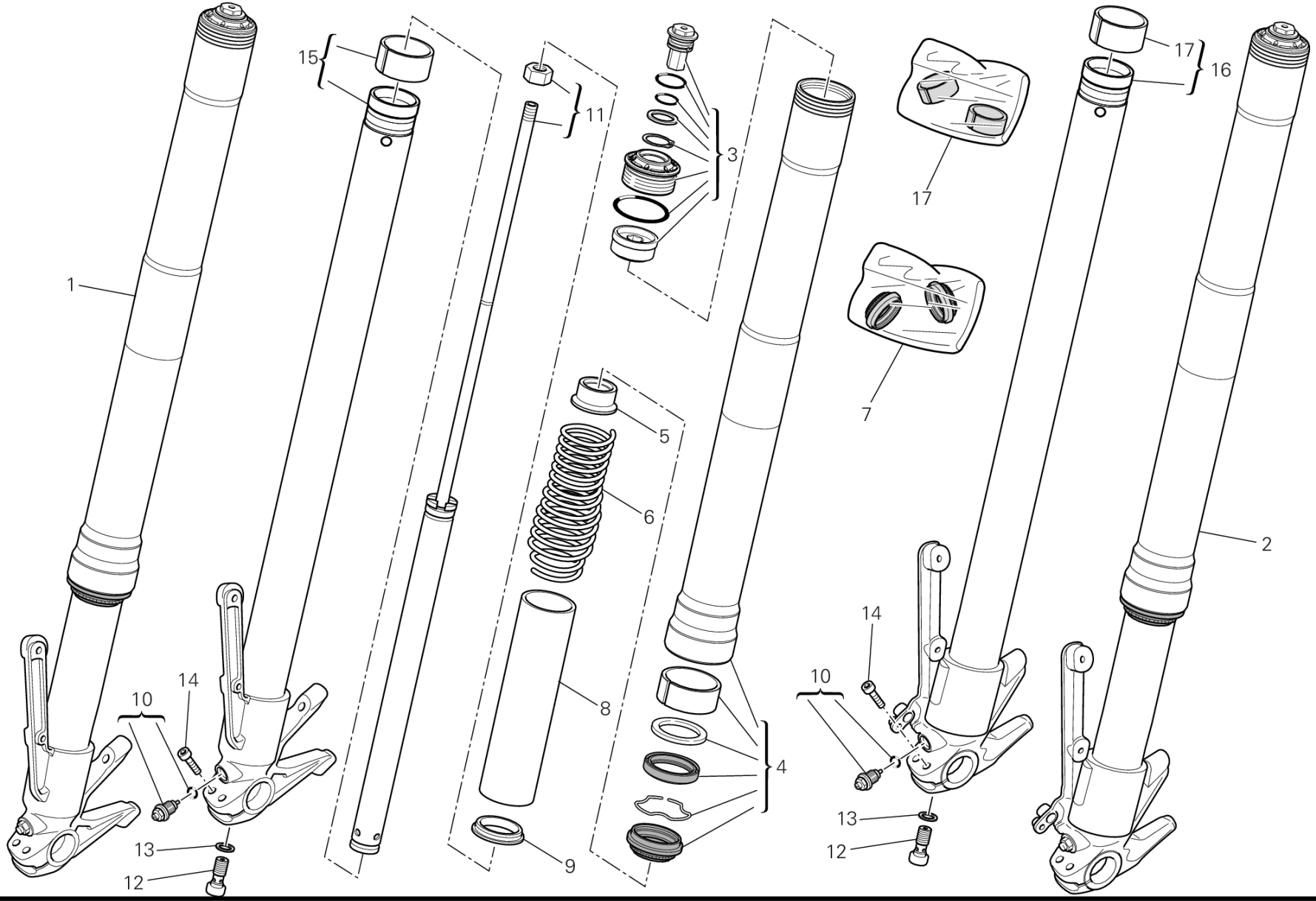
15
11
3
17
17
16
1
5
6
7
2
14
10
8
4
14
10
13
12
9
13
12

POS.	CODE	DESCRIPTION	QTY	START DATE	END DATE	VALIDITY	NOTES
1	34420301A	FORK LEG ASSY, RIGHT	1	11/05/2010		MOD:MS1200-A;XST:AUS,EUR,FRA,JAP,THAI	
2	34520301A	FORK LEG ASSY, LEFT	1	11/05/2010		MOD:MS1200-A;XST:AUS,EUR,FRA,JAP,THAI	
3	34920661A	PLUG ASSY	2	29/03/2010		MOD:MS1200-A;XST:AUS,EUR,FRA,JAP,THAI	
4	34920681A	FORK OUTER TUBE	2	29/03/2010		MOD:MS1200-A;XST:AUS,EUR,FRA,JAP,THAI	
5	34912161A	COUPLING	2	29/03/2010		MOD:MS1200-A;XST:AUS,EUR,FRA,JAP,THAI	
6	34913021A	SPRING	2	29/03/2010		MOD:MS1200-A;XST:AUS,EUR,FRA,JAP,THAI	
7	34920491A	SEAL SET, FRONT FORK	2	29/03/2010		MOD:MS1200-A;XST:AUS,EUR,FRA,JAP,THAI	
8	34913031A	PRELOAD TUBE	2	29/03/2010		MOD:MS1200-A;XST:AUS,EUR,FRA,JAP,THAI	
9	34912201A	BUSHING-FRONT FORK, SLIDE	2	29/03/2010		MOD:MS1200-A;XST:AUS,EUR,FRA,JAP,THAI	
10	34920671A	SCREW	2	29/03/2010		MOD:MS1200-A;XST:AUS,EUR,FRA,JAP,THAI	
11	34920691A	PLUNGER	2	29/03/2010		MOD:MS1200-A;XST:AUS,EUR,FRA,JAP,THAI	
12	34913041A	SCREW, SPECIAL	2	29/03/2010		MOD:MS1200-A;XST:AUS,EUR,FRA,JAP,THAI	
13	34910011A	GASKET	2	29/03/2010		MOD:MS1200-A;XST:AUS,EUR,FRA,JAP,THAI	
14	77156713B	SCREW	4	11/05/2010		MOD:MS1200-A;XST:AUS,EUR,FRA,JAP,THAI	
15	34920701A	COMPLETE RIGHT SLIDER	1	29/03/2010		MOD:MS1200-A;XST:AUS,EUR,FRA,JAP,THAI	
16	34920711A	COMPLETE LEFT SLIDER	1	29/03/2010		MOD:MS1200-A;XST:AUS,EUR,FRA,JAP,THAI	
17	34920571A	FRONT FORK OVERHAUL SET	2	29/03/2010		MOD:MS1200-A;XST:AUS,EUR,FRA,JAP,THAI	

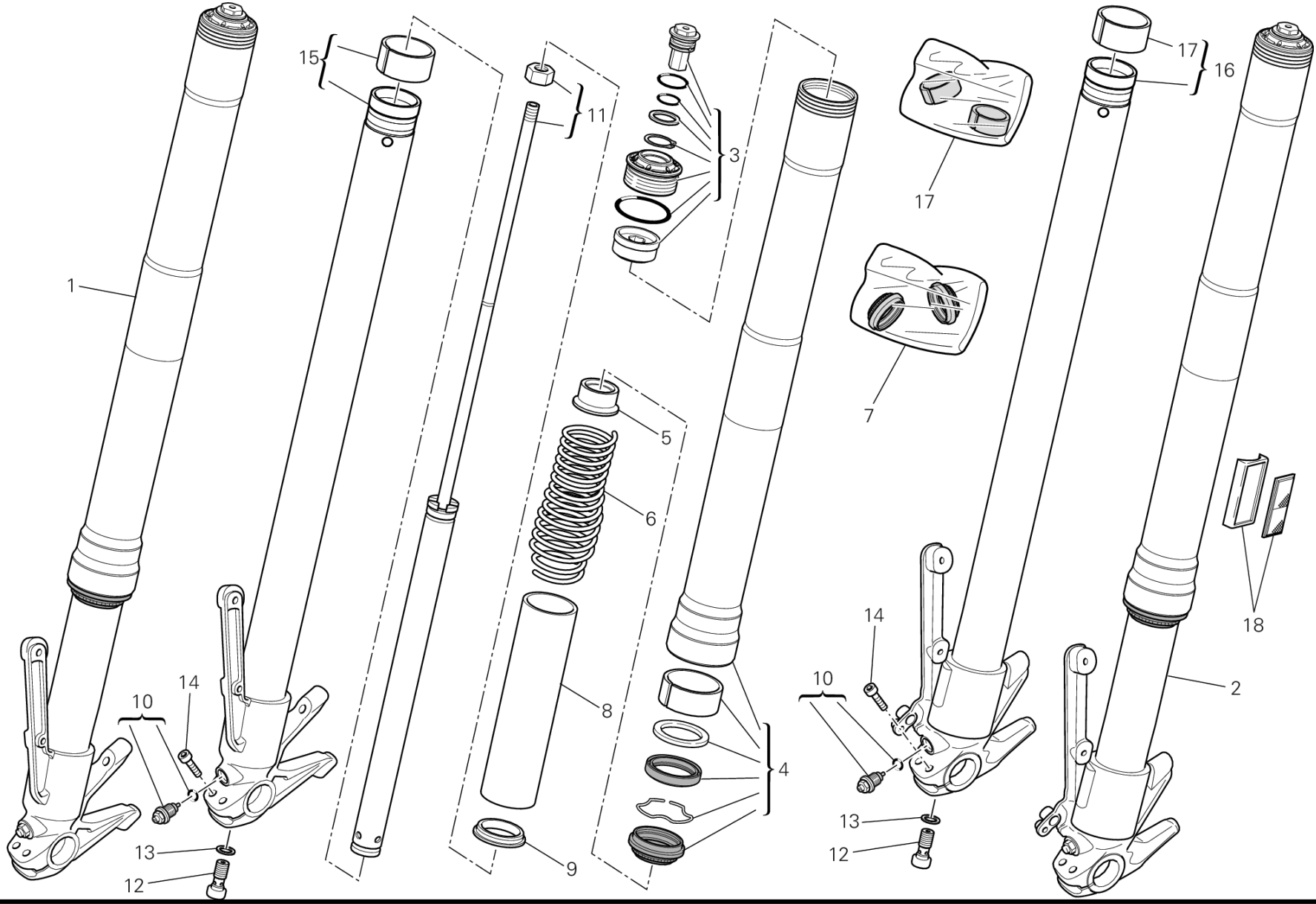
1
2
3
4
5
6
7
8
9
10
11
12
13
14
15
16
17
18

DRAWING 21A - FRONT FORK [MOD:MS1200-A;XST:CHN]

GROUP FRAME

POS.	CODE	DESCRIPTION	QTY	START DATE	END DATE	VALIDITY	NOTES
1	34420301A	FORK LEG ASSY, RIGHT	1	11/05/2010		MOD:MS1200-A;XST:CHN	
2	34520301A	FORK LEG ASSY, LEFT	1	11/05/2010		MOD:MS1200-A;XST:CHN	
3	34920661A	PLUG ASSY	2	29/03/2010		MOD:MS1200-A;XST:CHN	
4	34920681A	FORK OUTER TUBE	2	29/03/2010		MOD:MS1200-A;XST:CHN	
5	34912161A	COUPLING	2	29/03/2010		MOD:MS1200-A;XST:CHN	
6	34913021A	SPRING	2	29/03/2010		MOD:MS1200-A;XST:CHN	
7	34920491A	SEAL SET, FRONT FORK	2	29/03/2010		MOD:MS1200-A;XST:CHN	
8	34913031A	PRELOAD TUBE	2	29/03/2010		MOD:MS1200-A;XST:CHN	
9	34912201A	BUSHING-FRONT FORK, SLIDE	2	29/03/2010		MOD:MS1200-A;XST:CHN	
10	34920671A	SCREW	2	29/03/2010		MOD:MS1200-A;XST:CHN	
11	34920691A	PLUNGER	2	29/03/2010		MOD:MS1200-A;XST:CHN	
12	34913041A	SCREW, SPECIAL	2	29/03/2010		MOD:MS1200-A;XST:CHN	
13	34910011A	GASKET	2	29/03/2010		MOD:MS1200-A;XST:CHN	
14	77156713B	SCREW	4	11/05/2010		MOD:MS1200-A;XST:CHN	
15	34920701A	COMPLETE RIGHT SLIDER	1	29/03/2010		MOD:MS1200-A;XST:CHN	
16	34920711A	COMPLETE LEFT SLIDER	1	29/03/2010		MOD:MS1200-A;XST:CHN	
17	34920571A	FRONT FORK OVERHAUL SET	2	29/03/2010		MOD:MS1200-A;XST:CHN	
18	52910012A	REFLEX REFLECTOR AMBER	2	11/05/2010		MOD:MS1200-A;XST:CHN	

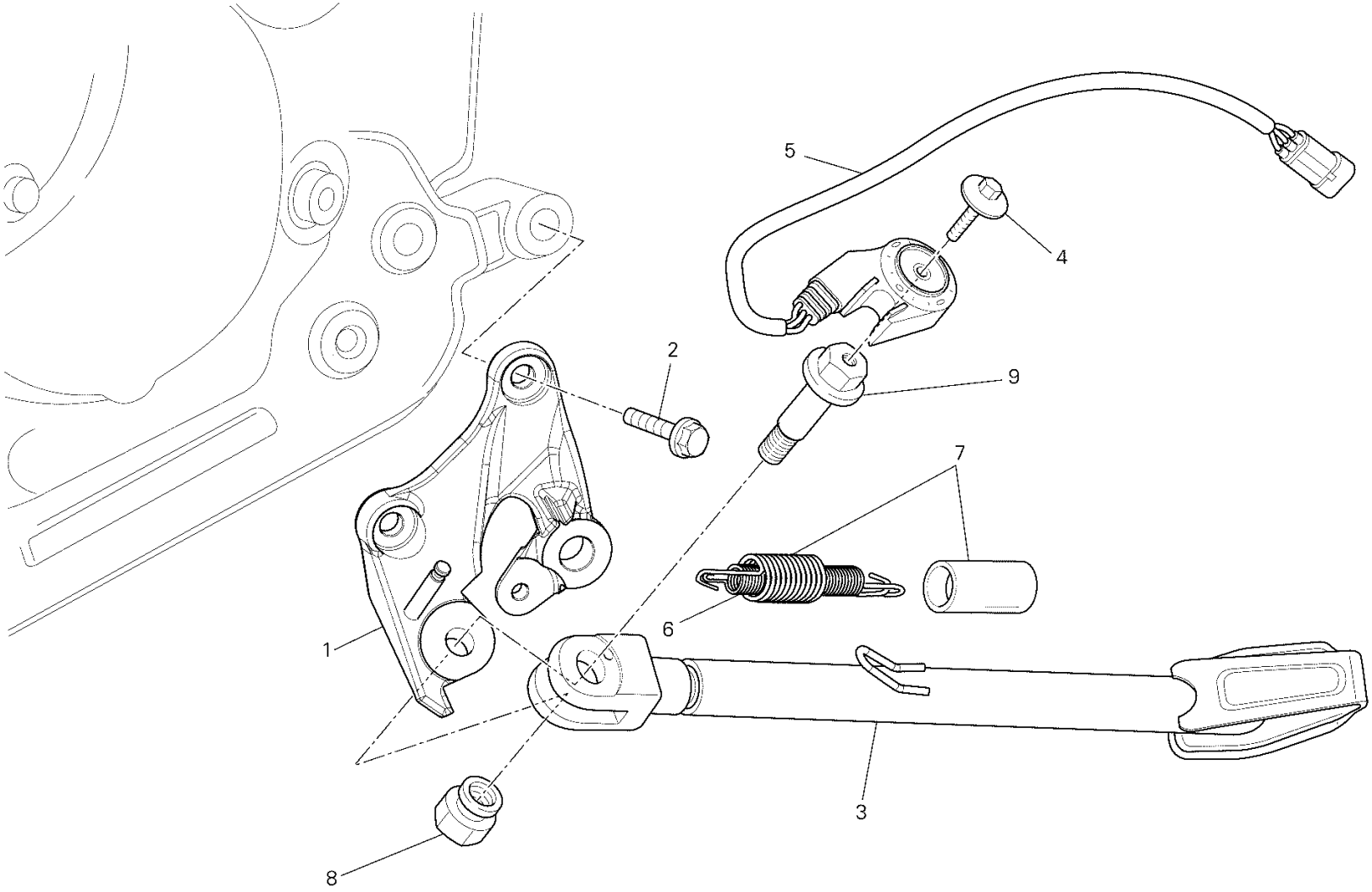
5
4
2
9
7
6
1
3
8

DRAWING 22A - SIDE STAND [MOD:MS1200-A;XST:AUS,CHN,EUR,FRA,JAP,THAI]

GROUP FRAME

POS.	CODE	DESCRIPTION	QTY	START DATE	END DATE	VALIDITY	NOTES
1	55620552B	BRACKET, SIDE STAND	1	09/03/2012		MOD:MS1200-A;XST:AUS,CHN,EUR,FRA,JAP,THAI	
2	77916221B	SCREW	2	09/03/2012		MOD:MS1200-A;XST:AUS,CHN,EUR,FRA,JAP,THAI	
3	55610542A	SIDE STAND	1	09/03/2012		MOD:MS1200-A;XST:AUS,CHN,EUR,FRA,JAP,THAI	
4	77940053A	SCREW	1	09/03/2012		MOD:MS1200-A;XST:AUS,CHN,EUR,FRA,JAP,THAI	
5	53910234B	SWITCH, STAND	1	09/03/2012		MOD:MS1200-A;XST:AUS,CHN,EUR,FRA,JAP,THAI	
6	79915081A	INNER SPRING	1	09/03/2012		MOD:MS1200-A;XST:AUS,CHN,EUR,FRA,JAP,THAI	
7	79921602A	COMPLETE SPRING	1	09/03/2012		MOD:MS1200-A;XST:AUS,CHN,EUR,FRA,JAP,THAI	
8	74941128B	NUT M8	1	09/03/2012		MOD:MS1200-A;XST:AUS,CHN,EUR,FRA,JAP,THAI	
9	82111032A	AXLE, SIDE STAND	1	09/03/2012		MOD:MS1200-A;XST:AUS,CHN,EUR,FRA,JAP,THAI	

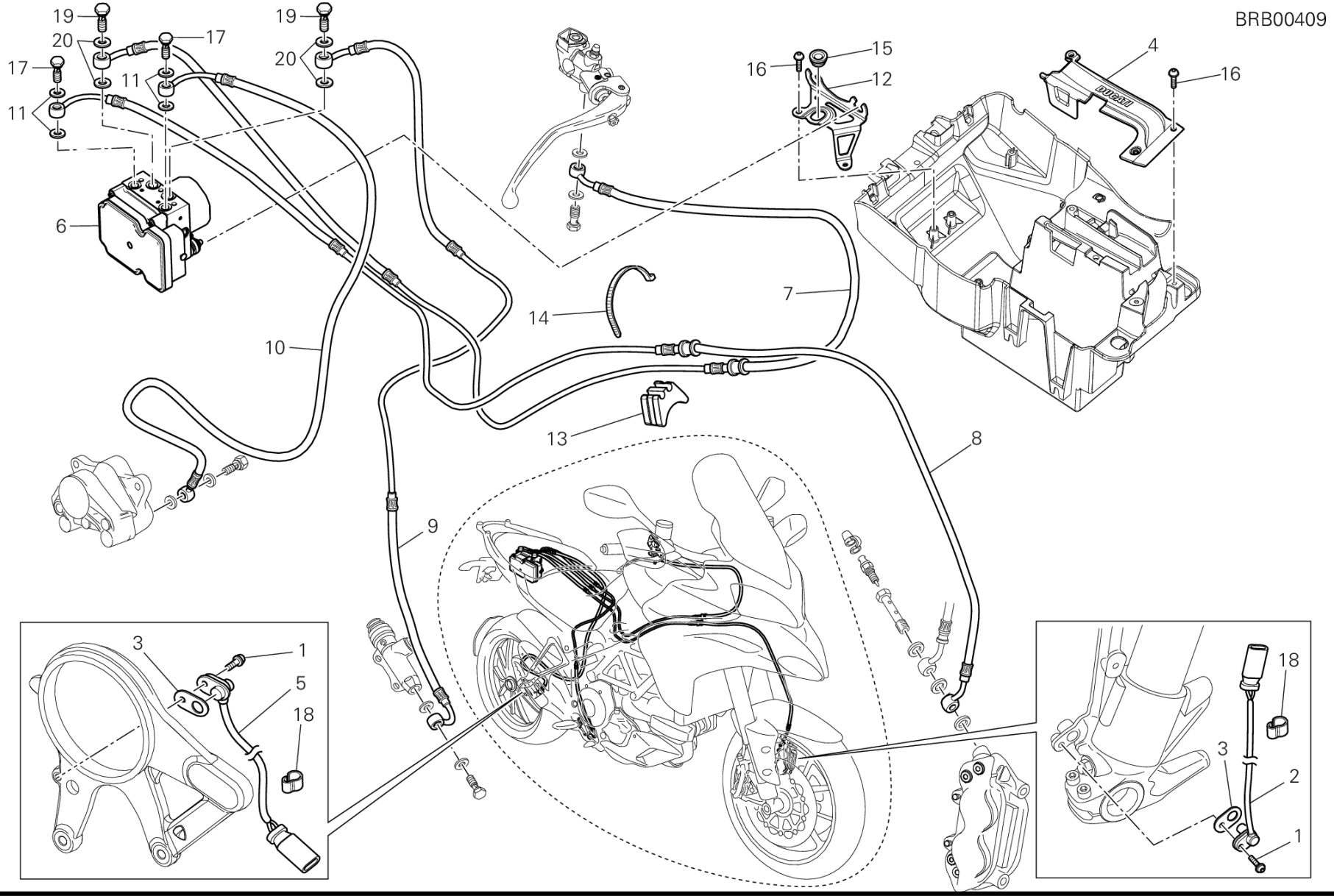
BRB00409
19
20
17
11
6
10
14
7
13
8
9
16
15
12
4
3
1
5
18
2

DRAWING 24A - BRAKING SYSTEM ABS [MOD:MS1200-A;XST:AUS,CHN,EUR,FRA,JAP,THAI]

GROUP FRAME

POS.	CODE	DESCRIPTION	QTY	START DATE	END DATE	VALIDITY	NOTES
1	77210601A	SCREW TEF M6X16	2	09/03/2012		MOD:MS1200-A;XST:AUS,CHN,EUR,FRA,JAP,THAI	
2	55212121B	SENSOR, FR WHEEL ABS	1	09/03/2012		MOD:MS1200-A;XST:AUS,CHN,EUR,FRA,JAP,THAI	
3	71314901A	GASKET TH.02	4	09/03/2012		MOD:MS1200-A;XST:AUS,CHN,EUR,FRA,JAP,THAI	
	71319201A	GASKET 0.5 MM	12			MOD:MS1200-A;XST:AUS,CHN,EUR,FRA,JAP,THAI	
4	24713521A	COVER	1	09/03/2012		MOD:MS1200-A;XST:AUS,CHN,EUR,FRA,JAP,THAI	
5	55212111B	SPEED SENSOR ABS REAR	1	09/03/2012		MOD:MS1200-A;XST:AUS,CHN,EUR,FRA,JAP,THAI	
6	54240391A	CONTROL UNIT ABS	1	09/03/2012		MOD:MS1200-A;XST:AUS,CHN,EUR,FRA,JAP,THAI	
7	61810371A	FRONT MASTER CYLINDER - CPU LINE	1	24/12/2009		MOD:MS1200-A;XST:AUS,CHN,EUR,FRA,JAP,THAI	
8	61810381B	HOSE, BRAKE	1	24/12/2009		MOD:MS1200-A;XST:AUS,CHN,EUR,FRA,JAP,THAI	
9	61910361B	HOSE, BRAKE	1	24/12/2009		MOD:MS1200-A;XST:AUS,CHN,EUR,FRA,JAP,THAI	
10	61910371B	HOSE, BRAKE	1	24/12/2009		MOD:MS1200-A;XST:AUS,CHN,EUR,FRA,JAP,THAI	
11	85250241A	WASHER 10X14X1	4	24/12/2009		MOD:MS1200-A;XST:AUS,CHN,EUR,FRA,JAP,THAI	
12	83017081A	BRACKET	1	09/03/2012		MOD:MS1200-A;XST:AUS,CHN,EUR,FRA,JAP,THAI	
13	86610451A	PAD	2	09/03/2012		MOD:MS1200-A;XST:AUS,CHN,EUR,FRA,JAP,THAI	
14	069191030	CLAMP	4	09/03/2012		MOD:MS1200-A;XST:AUS,CHN,EUR,FRA,JAP,THAI	
15	86640051A	RUBBER PAD	1	09/03/2012		MOD:MS1200-A;XST:AUS,CHN,EUR,FRA,JAP,THAI	
16	77440041A	SCREW, TAPPING M5X16	6	09/03/2012		MOD:MS1200-A;XST:AUS,CHN,EUR,FRA,JAP,THAI	

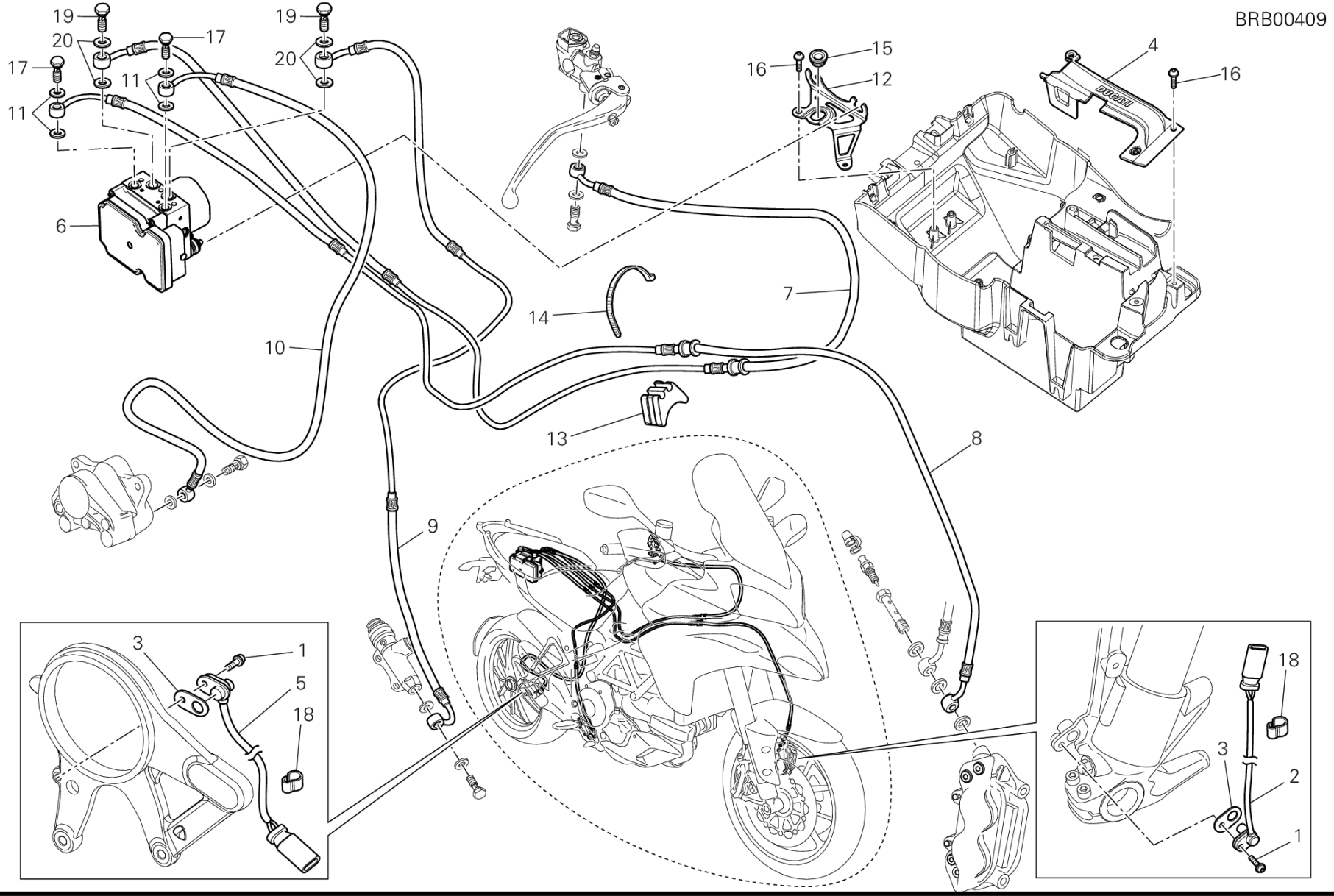
BRB00409
19
20
17
11
6
10
14
7
16
15
12
4
16
13
8
9
3
1
5
18
18
3
2
1

POS.	CODE	DESCRIPTION	QTY	START DATE	END DATE	VALIDITY	NOTES
17	77913661AB	BOLT, BRAKE HOSE M10X1	2	24/12/2009		MOD:MS1200-A;XST:AUS,CHN,EUR,FRA,JAP,THAI	
18	75840601A	FAIRLEAD	11	09/03/2012		MOD:MS1200-A;XST:AUS,CHN,EUR,FRA,JAP,THAI	
19	77913141B	SCREW, SPECIAL	2			MOD:MS1200-A;XST:AUS,CHN,EUR,FRA,JAP,THAI	
20	85250261B	GASKET, ALUMINIUM 12X16X1.5	4			MOD:MS1200-A;XST:AUS,CHN,EUR,FRA,JAP,THAI	

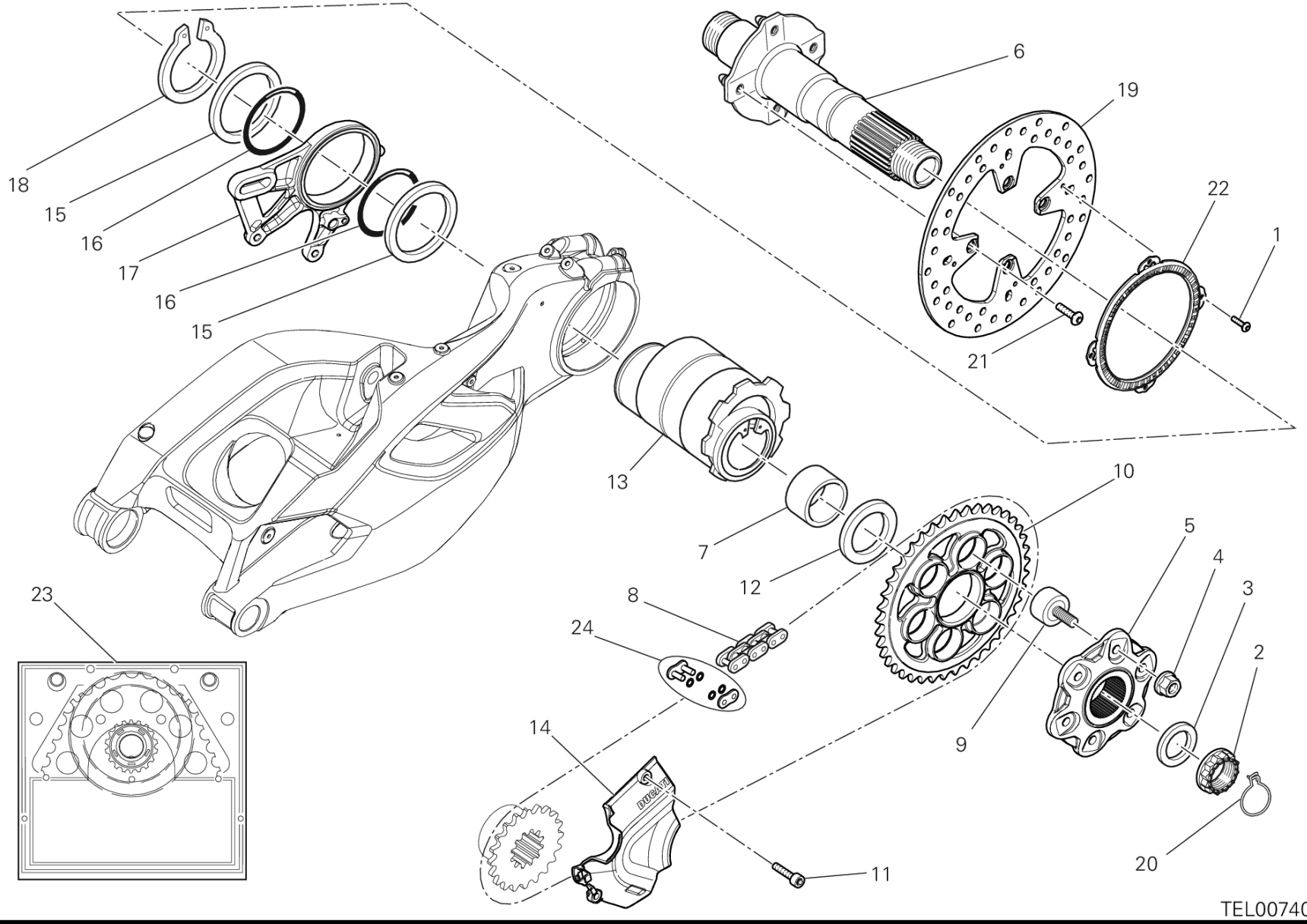
18
15
16
17
16
15
6
19
22
1
21
13
7
12
10
5
4
3
2
8
24
23
14
9
11
20
TEL00740

POS.	CODE	DESCRIPTION	QTY	START DATE	END DATE	VALIDITY	NOTES
1	77510631A	SCREW TBEI M5X8	4	09/03/2012		MOD:MS1200-A;XST:AUS,CHN,EUR,FRA,JAP,THAI	
2	75011391A	NUT	1	09/03/2012		MOD:MS1200-A;XST:AUS,CHN,EUR,FRA,JAP,THAI	
3	85212211A	WASHER 48.5X65X0.5	1	09/03/2012		MOD:MS1200-A;XST:AUS,CHN,EUR,FRA,JAP,THAI	
4	74810461A	NUT, FLANGE M10X1	6	09/03/2012		MOD:MS1200-A;XST:AUS,CHN,EUR,FRA,JAP,THAI	
5	16014201A	REAR SPROCKET FLANGE	1	09/03/2012		MOD:MS1200-A;XST:AUS,CHN,EUR,FRA,JAP,THAI	
6	819Z0021A	REAR WHEEL SPINDLE	1	14/04/2010		MOD:MS1200-A;XST:AUS,CHN,EUR,FRA,JAP,THAI	
7	88110541A	INNER SPACER	1	09/03/2012		MOD:MS1200-A;XST:AUS,CHN,EUR,FRA,JAP,THAI	
8	67640801A	CHAIN 107+1	1	12/11/2010		MOD:MS1200-A;XST:AUS,CHN,EUR,FRA,JAP,THAI	
9	70090562A	ABSORBER, HUB SHOCK	6	24/12/2009		MOD:MS1200-A;XST:AUS,CHN,EUR,FRA,JAP,THAI	
10	49411401A	RING GEAR Z=40	1	24/12/2009		MOD:MS1200-A;XST:AUS,CHN,EUR,FRA,JAP,THAI	
11	77550213C	SCREW TBEI M6X16	2	09/03/2012		MOD:MS1200-A;XST:AUS,CHN,EUR,FRA,JAP,THAI	
12	71410751A	SPACER	1	09/03/2012		MOD:MS1200-A;XST:AUS,CHN,EUR,FRA,JAP,THAI	
13	75620131A	HUB	1	09/03/2012		MOD:MS1200-A;XST:AUS,CHN,EUR,FRA,JAP,THAI	
14	46013941A	CHAIN PINION COVER	1	09/03/2012		MOD:MS1200-A;XST:AUS,CHN,EUR,FRA,JAP,THAI	
15	85212171A	WASHER 85.5X101X1	2	09/03/2012		MOD:MS1200-A;XST:AUS,CHN,EUR,FRA,JAP,THAI	
16	88641241A	O-RING 89.5X3	2	09/03/2012		MOD:MS1200-A;XST:AUS,CHN,EUR,FRA,JAP,THAI	
17	82510441A	CALIPER HOLDER PLATE ABS	1	09/03/2012		MOD:MS1200-A;XST:AUS,CHN,EUR,FRA,JAP,THAI	

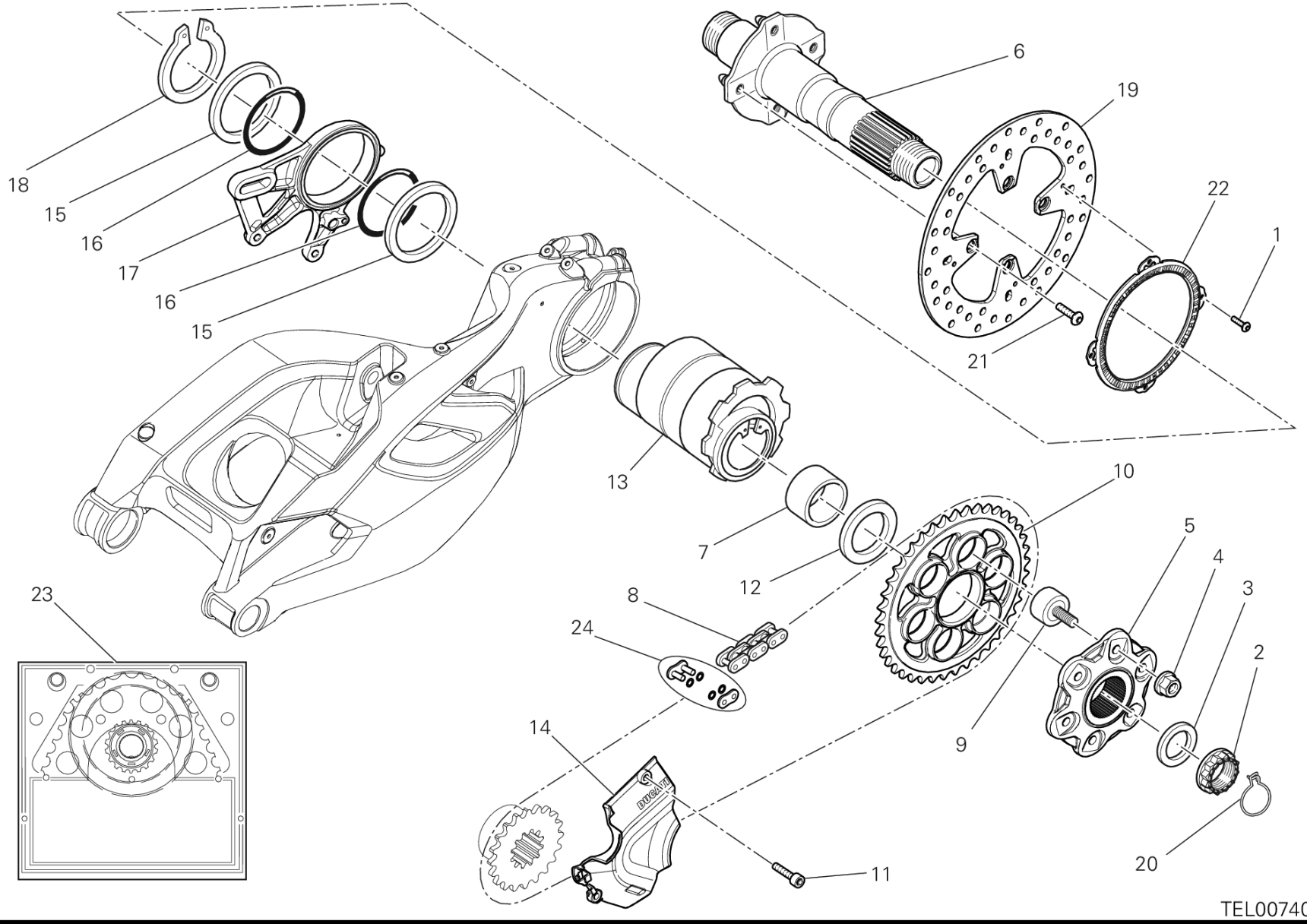
18
15
16
17
16
15
6
19
22
1
21
13
7
12
10
5
4
3
2
9
8
24
23
14
11
20
TEL00740

POS.	CODE	DESCRIPTION	QTY	START DATE	END DATE	VALIDITY	NOTES
18	88440511A	CIRCLIP 85X3	1	09/03/2012		MOD:MS1200-A;XST:AUS,CHN,EUR,FRA,JAP,THAI	
19	49210061A	REAR BRAKE DISC	1	09/03/2012		MOD:MS1200-A;XST:AUS,CHN,EUR,FRA,JAP,THAI	
20	75910222A	CLIP	1	09/03/2012		MOD:MS1200-A;XST:AUS,CHN,EUR,FRA,JAP,THAI	
21	77914881A	SCREW	4	09/03/2012		MOD:MS1200-A;XST:AUS,CHN,EUR,FRA,JAP,THAI	
22	50410091A	REAR PHONIC WHEEL	1	09/03/2012		MOD:MS1200-A;XST:AUS,CHN,EUR,FRA,JAP,THAI	
23	67620761A	FINAL DRIVE KIT	1	09/03/2012		MOD:MS1200-A;XST:AUS,CHN,EUR,FRA,JAP,THAI	
24	67740151A	CHAIN LINK	1	06/04/2010		MOD:MS1200-A;XST:AUS,CHN,EUR,FRA,JAP,THAI	

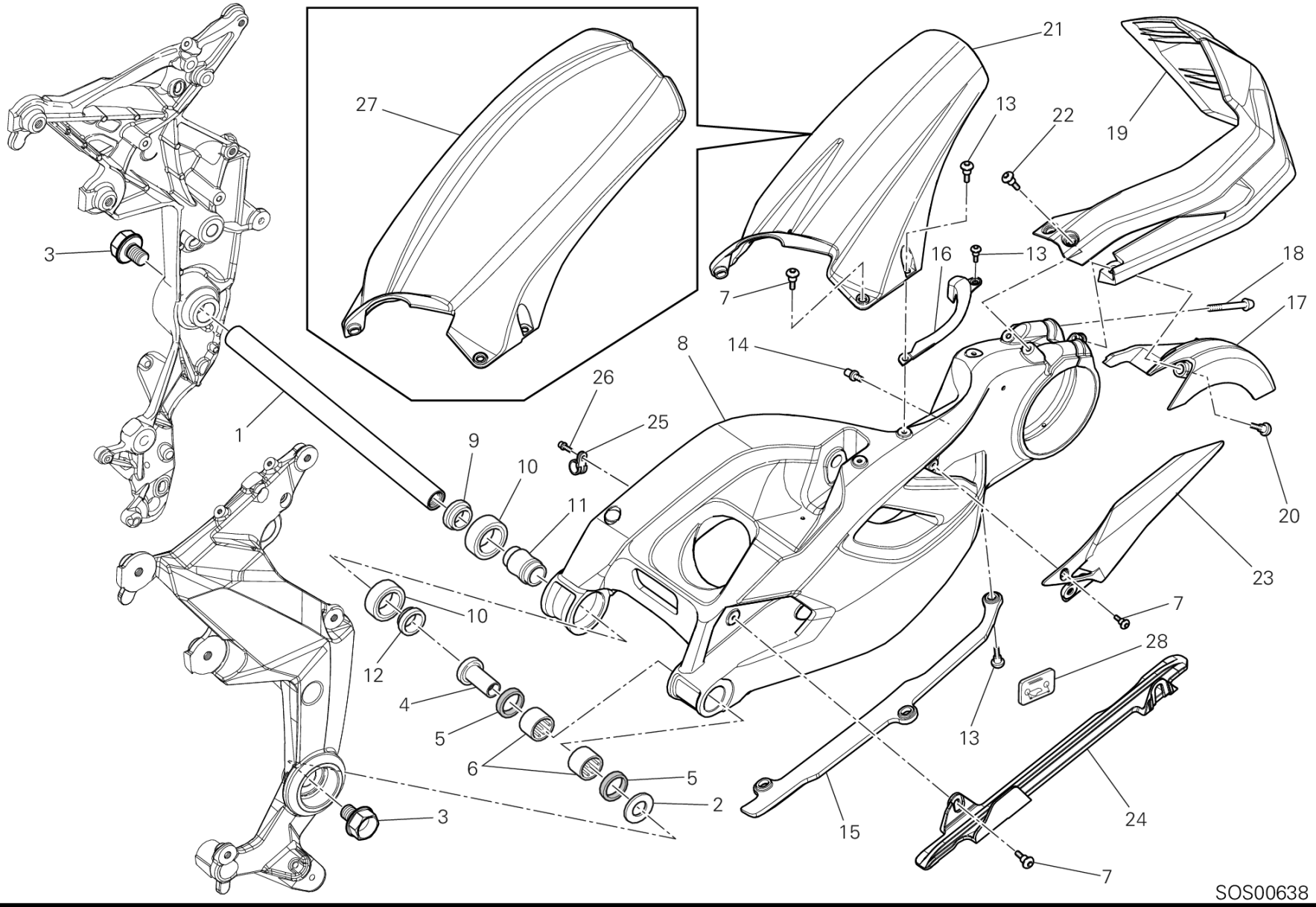
27
21
13
22
19
3
16
13
18
7
1
17
14
8
26
25
1
9
10
11
20
23
10
7
28
12
4
5
13
6
5
2
3
15
24
7
SOS00638

POS.	CODE	DESCRIPTION	QTY	START DATE	END DATE	VALIDITY	NOTES
1	36911241A	AXLE, REAR SWING ARM	1	09/03/2012		MOD:MS1200-A;XST:AUS,CHN,EUR,FRA,JAP,THAI	
2	85212571A	WASHER	1	09/03/2012		MOD:MS1200-A;XST:AUS,CHN,EUR,FRA,JAP,THAI	
3	77211052A	SCREW, SPECIAL	2	09/03/2012		MOD:MS1200-A;XST:AUS,CHN,EUR,FRA,JAP,THAI	
4	71011091A	BUSH, LH	1	09/03/2012		MOD:MS1200-A;XST:AUS,CHN,EUR,FRA,JAP,THAI	
5	93050121A	SEAL RING	2	24/12/2009		MOD:MS1200-A;XST:AUS,CHN,EUR,FRA,JAP,THAI	
6	70140171A	BEARING, NEEDLE	2	24/12/2009		MOD:MS1200-A;XST:AUS,CHN,EUR,FRA,JAP,THAI	
7	77210943B	SCREW, SPECIAL	4	09/03/2012		MOD:MS1200-A;XST:AUS,CHN,EUR,FRA,JAP,THAI	
8	37010902A	FORCELLONE POSTERIORE	1	24/12/2009		MOD:MS1200-A;XST:AUS,CHN,EUR,FRA,JAP,THAI	
9	71210291A	RIGHT SPACER	1	09/03/2012		MOD:MS1200-A;XST:AUS,CHN,EUR,FRA,JAP,THAI	
10	70250451A	BEARING	2	24/12/2009		MOD:MS1200-A;XST:AUS,CHN,EUR,FRA,JAP,THAI	
11	71311871A	INNER SPACER	1	24/12/2009		MOD:MS1200-A;XST:AUS,CHN,EUR,FRA,JAP,THAI	
12	71210301A	RIGHT SPACER	1	09/03/2012		MOD:MS1200-A;XST:AUS,CHN,EUR,FRA,JAP,THAI	
13	77210841B	SCREW	7	09/03/2012		MOD:MS1200-A;XST:AUS,CHN,EUR,FRA,JAP,THAI	
14	83210031C	PIN	1	09/03/2012		MOD:MS1200-A;XST:AUS,CHN,EUR,FRA,JAP,THAI	
15	44710812B	LOWER CHAIN SLIDING SHOE	1	09/03/2012		MOD:MS1200-A;XST:AUS,CHN,EUR,FRA,JAP,THAI	
16	46013951A	GUARD	1	09/03/2012		MOD:MS1200-A;XST:AUS,CHN,EUR,FRA,JAP,THAI	
17	56410881A	MUDFLAP	1	09/03/2012		MOD:MS1200-A;XST:AUS,CHN,EUR,FRA,JAP,THAI	

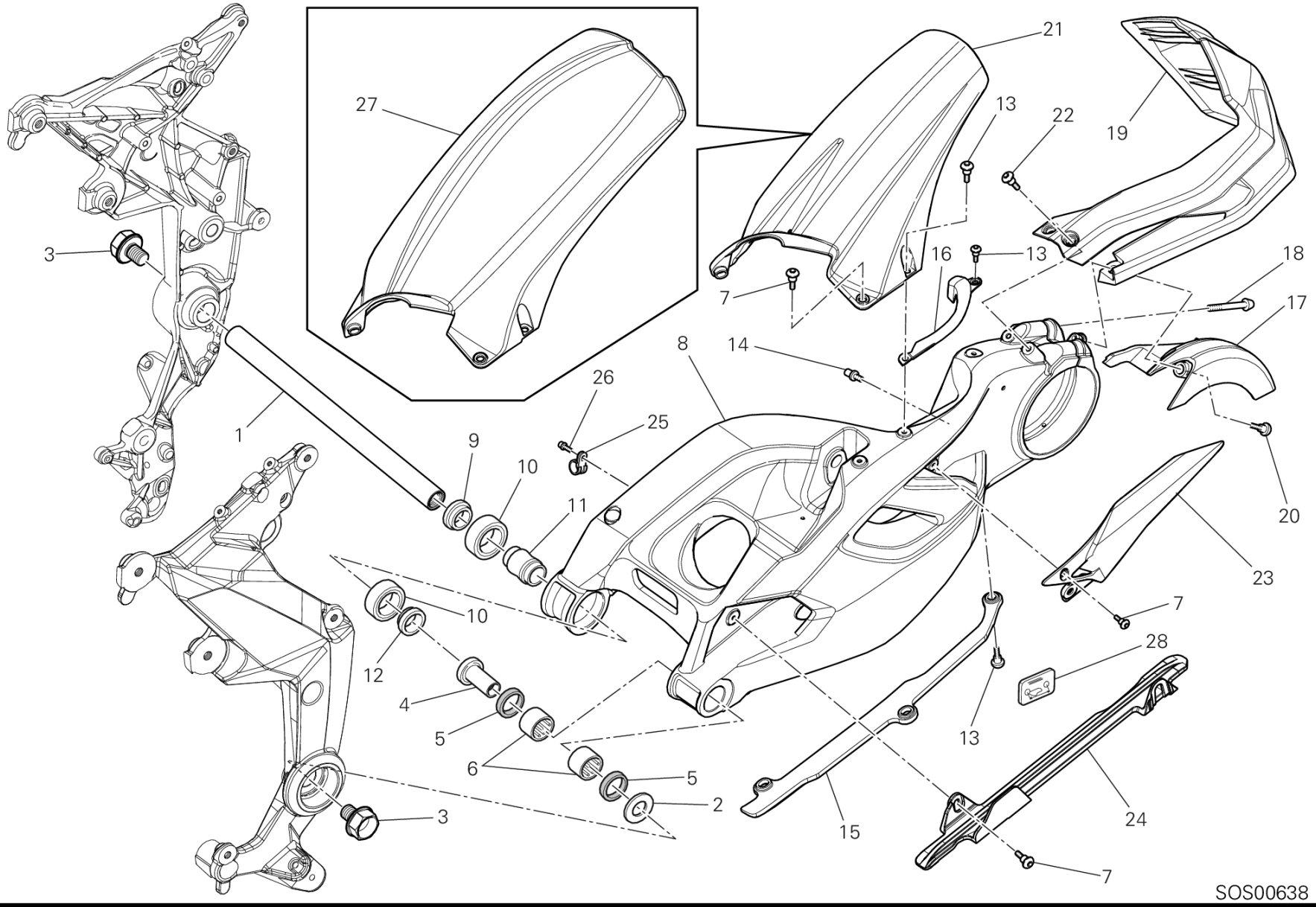
27
21
13
22
19
3
16
13
18
7
1
17
14
8
26
25
1
9
10
11
20
23
10
7
12
28
4
5
13
6
5
2
3
15
24
7
SOS00638

POS.	CODE	DESCRIPTION	QTY	START DATE	END DATE	VALIDITY	NOTES
18	77915031A	SCREW TCEI M12X1.25X40	2	09/03/2012		MOD:MS1200-A;XST:AUS,CHN,EUR,FRA,JAP,THAI	
19	56510471A	MUDFLAP REAR	1	09/03/2012		MOD:MS1200-A;XST:AUS,CHN,EUR,FRA,JAP,THAI	
20	77211211B	SCREW, SPECIAL	1	09/03/2012		MOD:MS1200-A;XST:AUS,CHN,EUR,FRA,JAP,THAI	
21	56510461A	REAR MUDGUARD	1	09/03/2012		MOD:MS1200-A;XST:AUS,CHN,EUR,FRA,JAP,THAI	
22	77211071B	SCREW, SPECIAL	2	09/03/2012		MOD:MS1200-A;XST:AUS,CHN,EUR,FRA,JAP,THAI	
23	44610221A	CHAIN GUARD	1	09/03/2012		MOD:MS1200-A;XST:AUS,CHN,EUR,FRA,JAP,THAI	
24	44710821B	UPPER CHAIN SLIDING SHOE	1	09/03/2012		MOD:MS1200-A;XST:AUS,CHN,EUR,FRA,JAP,THAI	
25	74140331A	CLAMP	2	09/03/2012		MOD:MS1200-A;XST:AUS,CHN,EUR,FRA,JAP,THAI	
26	77156658B	SCREW TCEIF M6X16	2	09/03/2012		MOD:MS1200-A;XST:AUS,CHN,EUR,FRA,JAP,THAI	
27	56510532A	REAR MUDGUARD LONG	1	09/03/2012		MOD:MS1200-A;XST:AUS,CHN,EUR,FRA,JAP,THAI	
28	43313571A	CHAIN ADJUSTMENT STICKER	1	09/03/2012		MOD:MS1200-A;XST:AUS,CHN,EUR,FRA,THAI	
	43313571B	CHAIN ADJUSTMENT STICKER	1	09/03/2012		MOD:MS1200-A;XST:JAP	JAP

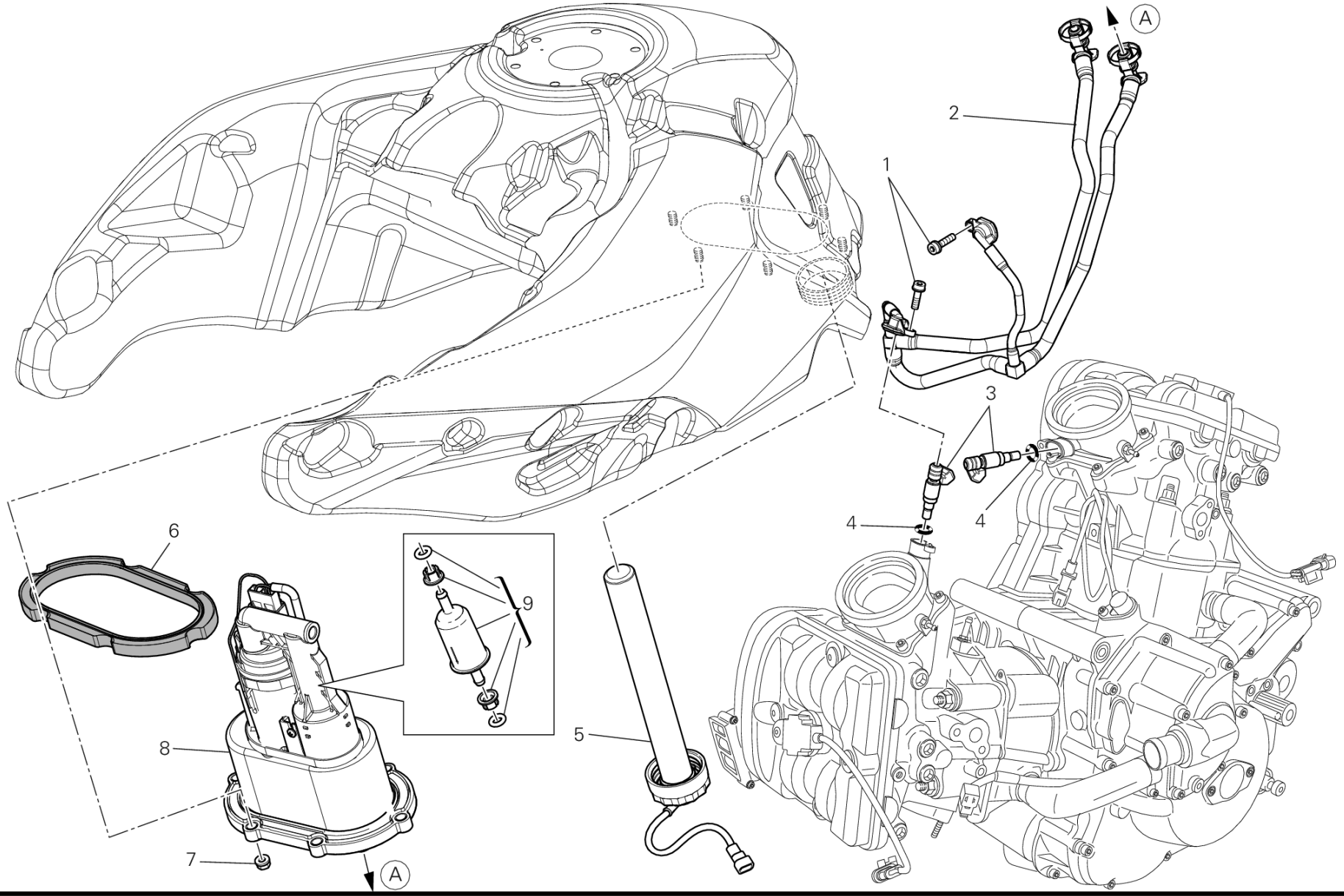
A
2
1
3
4
4
6
9
8
5
7
A

DRAWING 32A - FUEL PUMP [MOD:MS1200-A;XST:AUS,EUR,FRA,JAP,THAI]

GROUP FRAME

POS.	CODE	DESCRIPTION	QTY	START DATE	END DATE	VALIDITY	NOTES
1	77156398B	SCREW TCEIF M5X12	2	09/03/2012		MOD:MS1200-A;XST:AUS,EUR,FRA,JAP,THAI	
2	59023972A	COMPLETE PIPE SET	1	09/03/2012		MOD:MS1200-A;XST:AUS,EUR,FRA,JAP,THAI	
3	28040371A	INJECTOR	2	09/03/2012		MOD:MS1200-A;XST:AUS,EUR,FRA,JAP,THAI	
4	88650571A	O-RING	2	09/03/2012		MOD:MS1200-A;XST:AUS,EUR,FRA,JAP,THAI	
5	59210211B	FUEL LEVEL GAUGE	1	09/03/2012		MOD:MS1200-A;XST:AUS,EUR,FRA,JAP,THAI	
6	88650431A	GASKET	1			MOD:MS1200-A;XST:AUS,EUR,FRA,JAP,THAI	
7	74941108B	NUT, SELF LOCKING M5	6	09/03/2012		MOD:MS1200-A;XST:AUS,EUR,FRA,JAP,THAI	
8	16023981B	FLANGE	1			MOD:MS1200-A;XST:AUS,EUR,FRA,JAP,THAI	
9	42520011A	FILTER	1			MOD:MS1200-A;XST:AUS,EUR,FRA,JAP,THAI	

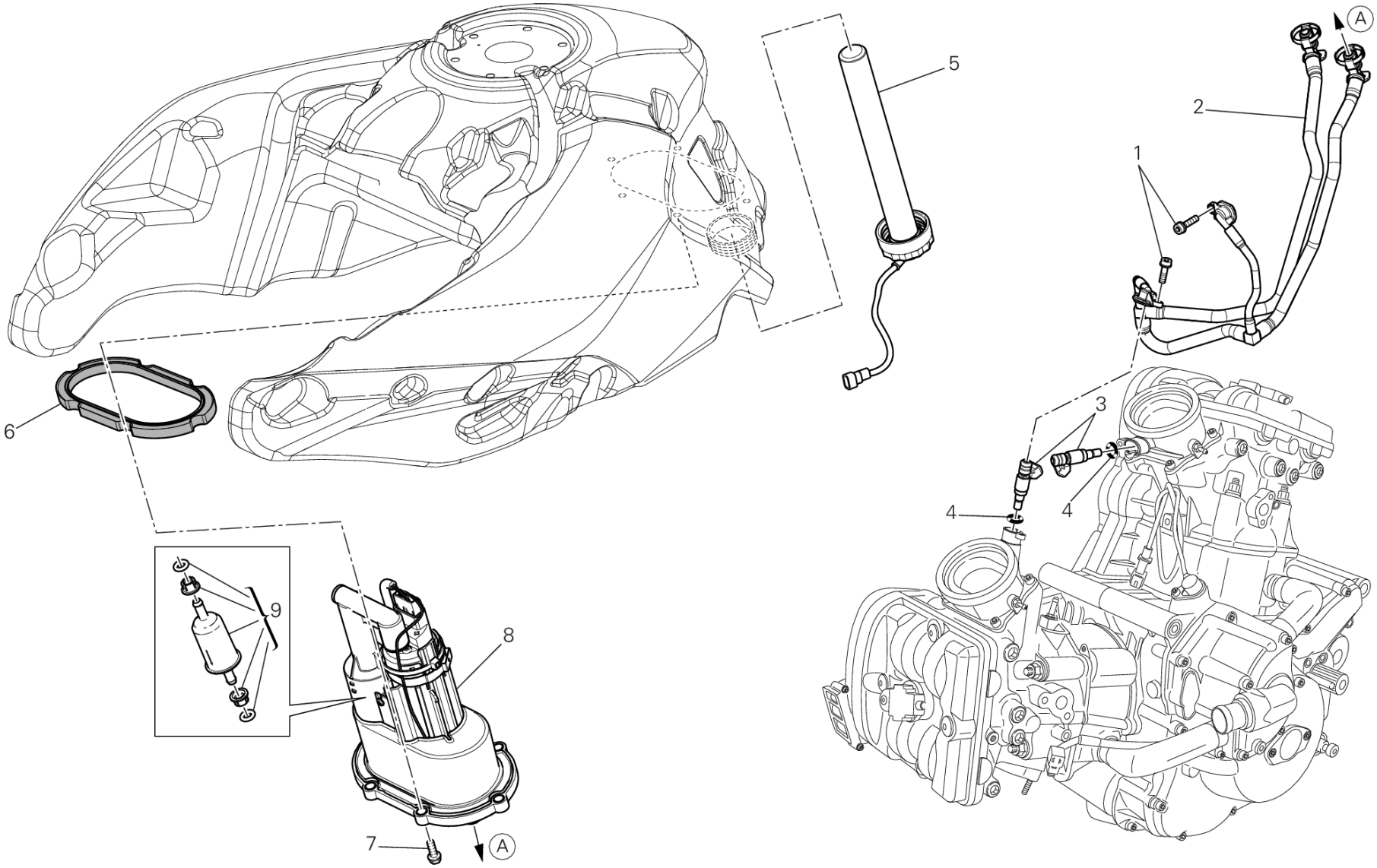

VST01169

DRAWING 32A - FUEL PUMP [MOD:MS1200-A;XST:CHN]

GROUP FRAME

POS.	CODE	DESCRIPTION	QTY	START DATE	END DATE	VALIDITY	NOTES
1	77156398B	SCREW TCEIF M5X12	2	09/03/2012		MOD:MS1200-A;XST:CHN	
2	59023972A	COMPLETE PIPE SET	1	09/03/2012		MOD:MS1200-A;XST:CHN	
3	28040371A	INJECTOR	2	09/03/2012		MOD:MS1200-A;XST:CHN	
4	88650571A	O-RING	2	09/03/2012		MOD:MS1200-A;XST:CHN	
5	59210211B	FUEL LEVEL GAUGE	1	09/03/2012		MOD:MS1200-A;XST:CHN	
6	88650431A	GASKET	1			MOD:MS1200-A;XST:CHN	
7	77210621A	SCREW TEF M5X16	6	09/03/2012		MOD:MS1200-A;XST:CHN	
8	16023981B	FLANGE	1			MOD:MS1200-A;XST:CHN	
9	42520011A	FILTER	1			MOD:MS1200-A;XST:CHN	

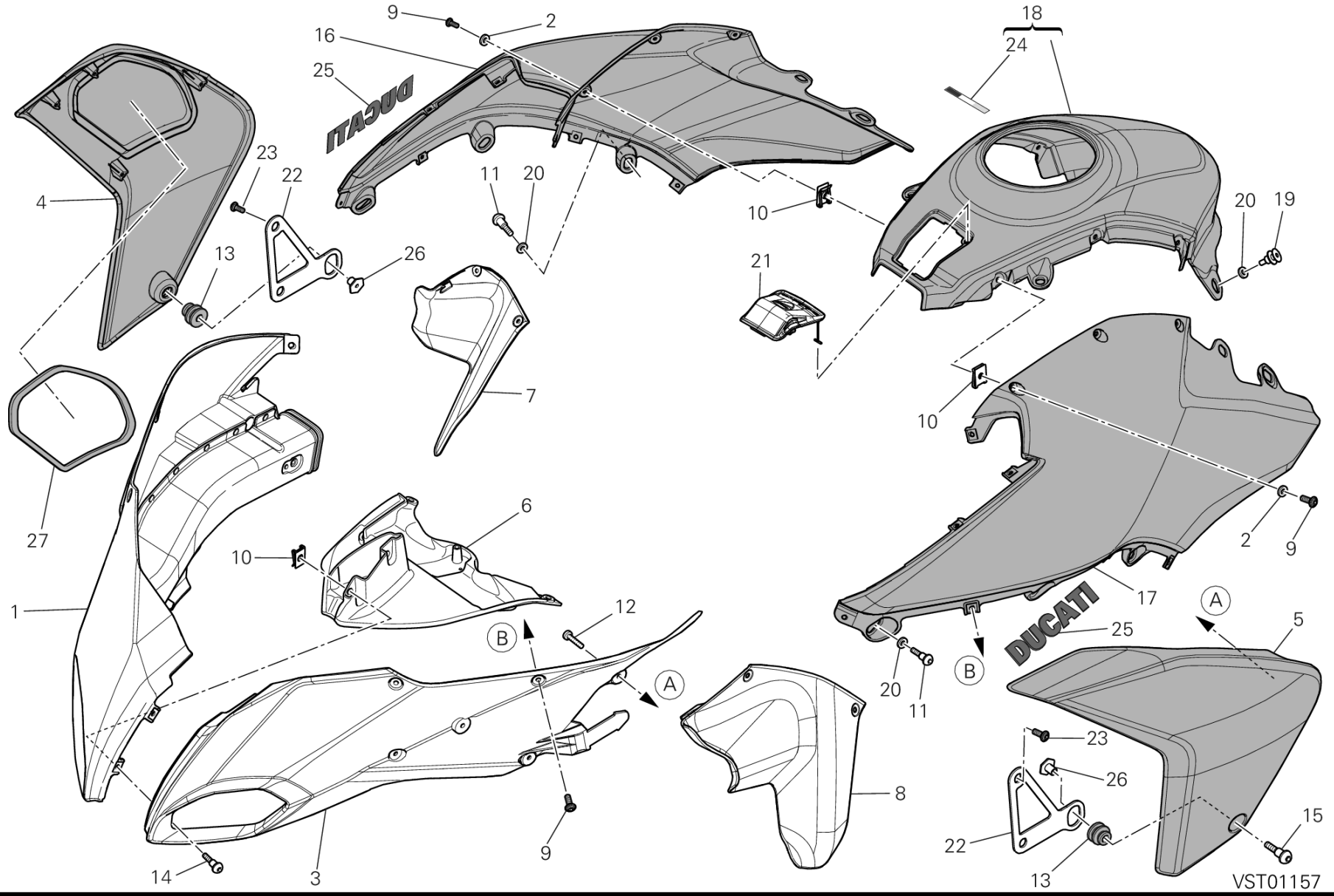
9
2
16
25
18
24
23
22
4
11
20
10
20
19
13
26
21
7
10
27
6
10
2
9
1
12
17
A
5
B
25
A
20
11
B
23
26
8
15
22
9
14
3
13
VST01157

POS.	CODE	DESCRIPTION	QTY	START DATE	END DATE	VALIDITY	NOTES
1	48011502A	FAIRING, RH	1	09/03/2012		MOD:MS1200-A;XST:AUS,CHN,EUR,FRA,JAP,THAI	
2	85611361A	WASHER	6	09/03/2012		MOD:MS1200-A;XST:AUS,CHN,EUR,FRA,JAP,THAI	
3	48011511A	FAIRING, LH	1	09/03/2012		MOD:MS1200-A;XST:AUS,CHN,EUR,FRA,JAP,THAI	
4	48022903AA	COVER, RADIATOR, RH	1	22/03/2011		MOD:MS1200-A;XST:AUS,CHN,EUR,FRA,JAP,THAI	ROSSO-RED-ROUGE-ROT-ROJO
	48022903AC	COVER, RADIATOR, RH	1	30/05/2012		MOD:MS1200-A;XST:AUS,CHN,EUR,FRA,JAP,THAI	MATT CHROME
5	48012912AA	COVER, RADIATOR, LH	1	09/03/2012		MOD:MS1200-A;XST:AUS,CHN,EUR,FRA,JAP,THAI	ROSSO-RED-ROUGE-ROT-ROJO
	48012912AC	COVER, RADIATOR, LH	1	09/03/2012		MOD:MS1200-A;XST:AUS,CHN,EUR,FRA,JAP,THAI	MATT CHROME
6	48012931A	HALF-FAIRING FRONT BOTTOM	1	09/03/2012		MOD:MS1200-A;XST:AUS,CHN,EUR,FRA,JAP,THAI	
7	48410851A	AIR DEFLECTOR BOTTOM R.H.	1	09/03/2012		MOD:MS1200-A;XST:AUS,CHN,EUR,FRA,JAP,THAI	
8	48410861A	AIR DEFLECTOR BOTTOM L.H.	1	09/03/2012		MOD:MS1200-A;XST:AUS,CHN,EUR,FRA,JAP,THAI	
9	77211091C	SCREW	16	09/03/2012		MOD:MS1200-A;XST:AUS,CHN,EUR,FRA,JAP,THAI	
10	85040471A	QUICK FASTENING M5	28	09/03/2012		MOD:MS1200-A;XST:AUS,CHN,EUR,FRA,JAP,THAI	
11	77210852A	SCREW TCEI M5X9	11	09/03/2012		MOD:MS1200-A;XST:AUS,CHN,EUR,FRA,JAP,THAI	
12	77450151A	SCREW	8	09/03/2012		MOD:MS1200-A;XST:AUS,CHN,EUR,FRA,JAP,THAI	
13	76410481A	VIBRATION DAMPER	2	09/03/2012		MOD:MS1200-A;XST:AUS,CHN,EUR,FRA,JAP,THAI	
14	77210853B	SCREW TCEI M5X9	2	09/03/2012		MOD:MS1200-A;XST:AUS,CHN,EUR,FRA,JAP,THAI	
15	77211121C	SCREW, SPECIAL	2	09/03/2012		MOD:MS1200-A;XST:AUS,CHN,EUR,FRA,JAP,THAI	

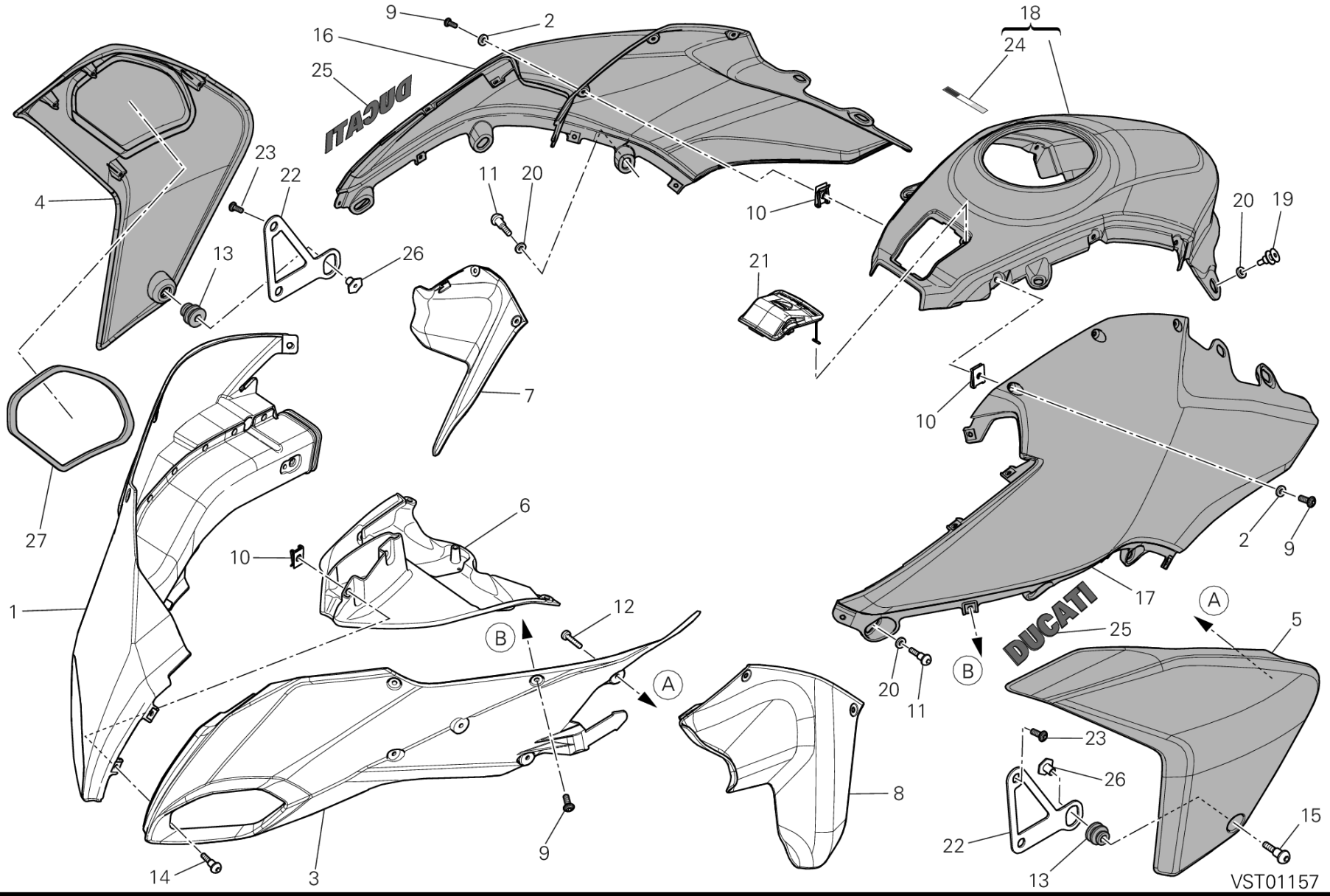
9
2
16
25
18
24
23
22
4
11
20
10
20
19
13
26
21
7
10
27
6
10
2
9
1
12
17
A
5
B
25
A
20
11
B
23
26
8
15
22
9
14
3
13
VST01157

POS.	CODE	DESCRIPTION	QTY	START DATE	END DATE	VALIDITY	NOTES
16	48012943AC	HALF-FAIRING TANK R.H.	1	09/03/2012		MOD:MS1200-A;XST:AUS,CHN,EUR,FRA,JAP,THAI	MATT CHROME
	48012943AD	HALF-FAIRING TANK R.H.	1	09/03/2012		MOD:MS1200-A;XST:AUS,CHN,EUR,FRA,JAP,THAI	ROSSO-RED-ROUGE-ROT-ROJO
17	48012953AC	HALF-FAIRING TANK L.H.	1	09/03/2012		MOD:MS1200-A;XST:AUS,CHN,EUR,FRA,JAP,THAI	MATT CHROME
	48012953AD	HALF-FAIRING TANK L.H.	1	09/03/2012		MOD:MS1200-A;XST:AUS,CHN,EUR,FRA,JAP,THAI	ROSSO-RED-ROUGE-ROT-ROJO
18	48012963AA	HALF-FAIRING TANK CENTRE	1	09/03/2012		MOD:MS1200-A;XST:AUS,CHN,EUR,FRA,JAP,THAI	ROSSO-RED-ROUGE-ROT-ROJO
	48012963AC	HALF-FAIRING TANK CENTRE	1	09/03/2012		MOD:MS1200-A;XST:AUS,CHN,EUR,FRA,JAP,THAI	MATT CHROME
19	77916143A	SCREW, SPECIAL	2	09/03/2012		MOD:MS1200-A;XST:AUS,CHN,EUR,FRA,JAP,THAI	
20	85212181A	WASHER, NYLON 9X14X1	13	09/03/2012		MOD:MS1200-A;XST:AUS,CHN,EUR,FRA,JAP,THAI	
21	87210661A	COVER HANDSFREE	1	09/03/2012		MOD:MS1200-A;XST:AUS,CHN,EUR,FRA,JAP,THAI	
22	83015681C	BRACKET	2	09/03/2012		MOD:MS1200-A;XST:AUS,CHN,EUR,FRA,JAP,THAI	
23	77211021A	SCREW TBEIF M6X10	4	09/03/2012		MOD:MS1200-A;XST:AUS,CHN,EUR,FRA,JAP,THAI	
24	43511501A	EMBLEM ITALIAN FLAG	1	01/01/2012		MOD:MS1200-A;XST:AUS,CHN,EUR,FRA,JAP,THAI	
25	43512801A	STICKER DUCATI	2	09/03/2012		MOD:MS1200-A;XST:AUS,CHN,EUR,FRA,JAP,THAI	
26	71011301A	SPINDLE, TAPER	2	09/03/2012		MOD:MS1200-A;XST:AUS,CHN,EUR,FRA,JAP,THAI	
27	79110782A	RIGHT GASKET	1	22/03/2011		MOD:MS1200-A;XST:AUS,CHN,EUR,FRA,JAP,THAI	

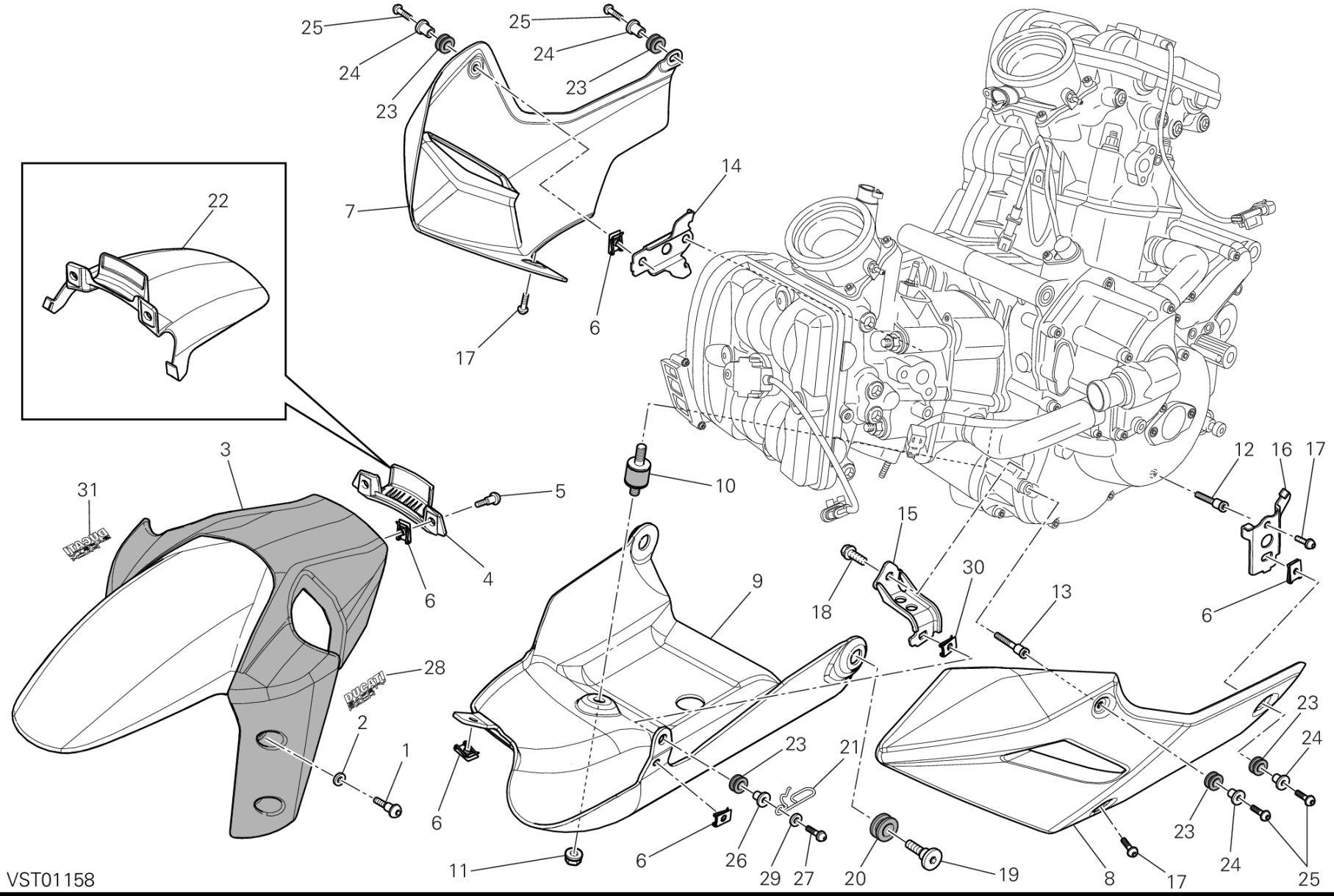
25
24
23
7
17
6
14
22
3
31
5
4
10
9
15
18
30
13
12
16
17
28
2
1
11
26
29
27
20
19
8
21
VST01158

POS.	CODE	DESCRIPTION	QTY	START DATE	END DATE	VALIDITY	NOTES
1	77914391C	SCREW	4	09/03/2012		MOD:MS1200-A;XST:AUS,CHN,EUR,FRA,JAP,THAI	
2	85611271A	WASHER	4	09/03/2012		MOD:MS1200-A;XST:AUS,CHN,EUR,FRA,JAP,THAI	
3	56411061BA	FRONT MUDGUARD	1	09/03/2012		MOD:MS1200-A;XST:AUS,CHN,EUR,FRA,JAP,THAI	ROSSO-RED-ROUGE-ROT-ROJO
	56411061BC	FRONT MUDGUARD	1	09/03/2012		MOD:MS1200-A;XST:AUS,CHN,EUR,FRA,JAP,THAI	MATT CHROME
4	85012121A	HOSE GUIDE	1	09/03/2012		MOD:MS1200-A;XST:AUS,CHN,EUR,FRA,JAP,THAI	
5	77210853B	SCREW TCEI M5X9	2	09/03/2012		MOD:MS1200-A;XST:AUS,CHN,EUR,FRA,JAP,THAI	
6	85040551A	QUICK FASTENING	6	09/03/2012		MOD:MS1200-A;XST:AUS,CHN,EUR,FRA,JAP,THAI	
7	46013551B	GUARD, ENGINE, FR, RH	1	09/03/2012		MOD:MS1200-A;XST:AUS,CHN,EUR,FRA,JAP,THAI	
8	46013561C	GUARD, ENGINE, FR, LH	1	09/03/2012		MOD:MS1200-A;XST:AUS,CHN,EUR,FRA,JAP,THAI	
9	46014011C	GUARD, ENGINE	1	09/03/2012		MOD:MS1200-A;XST:AUS,CHN,EUR,FRA,JAP,THAI	
10	70010621A	VIBRATION DAMPER	1	09/03/2012		MOD:MS1200-A;XST:AUS,CHN,EUR,FRA,JAP,THAI	
11	74940081A	NUT M8	1	09/03/2012		MOD:MS1200-A;XST:AUS,CHN,EUR,FRA,JAP,THAI	
12	77915941B	SPECIAL SCREW SHORT	1	16/05/2011		MOD:MS1200-A;XST:AUS,CHN,EUR,FRA,JAP,THAI	
13	77915951C	SPECIAL SCREW LONG	1	16/05/2011		MOD:MS1200-A;XST:AUS,CHN,EUR,FRA,JAP,THAI	
14	83015221B	RIGHT BRACKET	1	16/05/2011		MOD:MS1200-A;XST:AUS,CHN,EUR,FRA,JAP,THAI	
15	83015731B	BRACKET FRONT L.H.	1	09/03/2012		MOD:MS1200-A;XST:AUS,CHN,EUR,FRA,JAP,THAI	
16	83015251A	BRACKET REAR L.H.	1	09/03/2012		MOD:MS1200-A;XST:AUS,CHN,EUR,FRA,JAP,THAI	

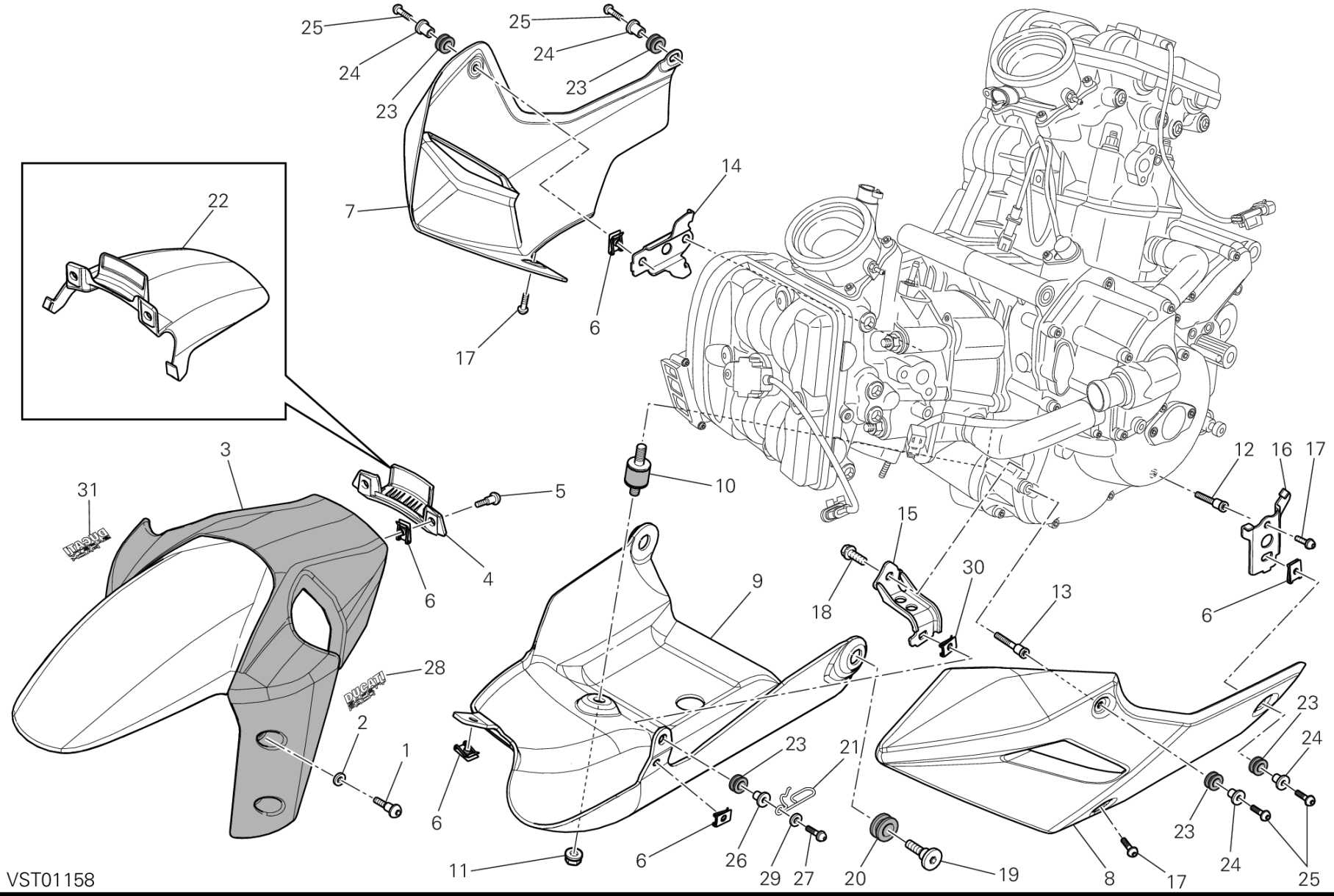
25
24
23
7
17
6
14
22
3
31
5
4
10
9
15
18
30
13
12
16
17
28
2
1
11
26
29
27
20
19
8
21
VST01158

POS.	CODE	DESCRIPTION	QTY	START DATE	END DATE	VALIDITY	NOTES
17	77213178B	SCREW	3	10/01/2013		MOD:MS1200-A;XST:AUS,CHN,EUR,FRA,JAP,THAI	
18	77251308B	SCREW	1	09/03/2012		MOD:MS1200-A;XST:AUS,CHN,EUR,FRA,JAP,THAI	
19	77916371A	SCREW, SPECIAL	2	09/03/2012		MOD:MS1200-A;XST:AUS,CHN,EUR,FRA,JAP,THAI	
20	76411381A	VIBRATION DAMPER PAD	2	09/03/2012		MOD:MS1200-A;XST:AUS,CHN,EUR,FRA,JAP,THAI	
21	88110731A	HOSE GUIDE	1	09/03/2012		MOD:MS1200-A;XST:AUS,CHN,EUR,FRA,JAP,THAI	
22	56410801A	EXTENSION, FRONT FENDER	1	09/03/2012		MOD:MS1200-A;XST:AUS,CHN,EUR,FRA,JAP,THAI	
23	76410841A	VIBRATION DAMPER PAD	5	09/03/2012		MOD:MS1200-A;XST:AUS,CHN,EUR,FRA,JAP,THAI	
24	71614252AA	SPACER	4	09/03/2012		MOD:MS1200-A;XST:AUS,CHN,EUR,FRA,JAP,THAI	
25	77213218B	SCREW	4	10/01/2013		MOD:MS1200-A;XST:AUS,CHN,EUR,FRA,JAP,THAI	
26	71614111A	SPACER	1	09/03/2012		MOD:MS1200-A;XST:AUS,CHN,EUR,FRA,JAP,THAI	
27	77211181A	SCREW, SPECIAL	1	09/03/2012		MOD:MS1200-A;XST:AUS,CHN,EUR,FRA,JAP,THAI	
28	43713331A	DECAL "DUCATI SAFETY PACK"	1	01/10/2012		MOD:MS1200-A;XST:AUS,CHN,EUR,FRA,JAP,THAI	
29	85250311A	WASHER 5.3X15X1.2	1	09/03/2012		MOD:MS1200-A;XST:AUS,CHN,EUR,FRA,JAP,THAI	
30	85040381A	QUICK FASTENING	1	09/03/2012		MOD:MS1200-A;XST:AUS,CHN,EUR,FRA,JAP,THAI	
31	43713321A	DECAL "DUCATI SAFETY PACK"	1	01/10/2012		MOD:MS1200-A;XST:AUS,CHN,EUR,FRA,JAP,THAI	

CODE	NO. TABLE	POS.
025147054	003	1
027291090	002	8
037072020	023	8
037072020	024	12
040009050	002	21
040029125	002	17
040029126	002	17
066013143	002	9
066013165	002	25
066549680	005	8
067016150	003	3
067016155	003	19
067016170	003	26
067049310	009	17
069191030	18B	11
069191030	24A	14
075949280	009	15
076592205	002	21
079913110	002	27
11210121AB	006	8
11210121AC	006	8
11721112A	004	16
11721131A	025	18
12021724B	007	5
12021734B	007	10
12110781B	007	3
12112481A	007	2
12120521A	007	4
12221693A	007	1
13510352B	017	7
13510352B	017	7
14010731A	017	1
14010731A	017	1
14010751A	017	14
14010751A	017	14
14621862AR	006	1
14710811A	008	3
14823421B	013	15
14823431B	013	11
14823441B	013	14
14823451B	013	18
14910821A	003	25
14910831B	003	2
15021412A	003	28
15021431B	003	27
15820234A	006	5
16010941A	013	10
16014201A	26A	5
16023981B	32A	8
16023981B	32A	8
160Z0011A	012	13
17021251A	006	15
171Z0031A	008	13
17213271A	003	10
17213281A	003	8
17213291A	003	5
17213301A	003	9
17213311A	003	18
17213321A	003	24
17213331C	003	22
17213341A	003	21
17213351A	003	20
17213361A	003	23
173Z0021A	012	14
174Z0021A	009	1
176Z0021A	012	10
18010081A	002	24
180Z0031A	002	11
180Z0041A	002	12
18220521A	002	18
18710021A	023	3
18710021A	024	22
19010421A	004	11
19020232A	004	9
19410511A	004	4
19540032B	004	19
19610532A	004	12
19610542A	004	20
19820391A	004	14
20810321A	014	3
20810321A	015	3
20910491A	014	16
20910491A	015	16
20910501A	014	4
20910501A	015	4
21010781A	014	14
21010781A	015	14
21110771B	014	5
21110771B	015	5
22522812A	010	1
24221092AC	011	13
24321331BE	005	1
24511052A	008	2
24511271A	008	23
24511281A	008	1
24521071A	008	21
24713051AF	011	23
24713331A	27A	13
24713331A	27B	13
24713461D	27A	20
24713461D	27B	20
24713511B	009	19
24713521A	24A	4
24713592A	18A	15
24714141A	013	5
24714151A	013	6
24714161A	013	22
24714171A	013	24
24714381A	18C	8
24714522A	034	29
24714532A	034	30
24721301AC	011	31
25120121A	011	29
25440012A	005	4
25510104B	008	18
25510193A	013	7
26420131A	011	1
27040104A	012	1
27610541A	012	16
28040371A	32A	3
28040371A	32A	3
28240911A	017	11
28240911A	017	11
28611245B	021	30
28611274B	021	30
28620441A	01C	6
28642321A	18A	7
28642321E	18A	7
28642321F	18A	7
28642321L	18A	7
30124611A	015	22
30124621A	014	22
30310631BB	014	7
30310631BB	015	7
30310631BC	014	7
30310631BC	015	7
30310631BD	014	7
30310631BD	015	7
30410881A	014	13
30410881A	015	13
30410881AB	014	13
30410881AB	015	13
30410881AC	014	13
30410881AC	015	13
30410891A	014	10
30410891A	015	10
30410891AB	014	10
30410891AB	015	10
30410891AC	014	10
30410891AC	015	10
34120741C	021	23
34220741AA	021	3
34420301A	21A	1
34420301A	21A	1
34520301A	21A	2
34520301A	21A	2
34910011A	21A	13
34910011A	21A	13
34912161A	21A	5
34912161A	21A	5
34912201A	21A	9
34912201A	21A	9
34913021A	21A	6
34913021A	21A	6
34913031A	21A	8
34913031A	21A	8
34913041A	21A	12
34913041A	21A	12
34920491A	21A	7
34920491A	21A	7
34920571A	21A	17
34920571A	21A	17
34920661A	21A	3
34920661A	21A	3
34920671A	21A	10
34920671A	21A	10

ALPHANUMERIC INDEX

CODE	NO. TABLE	POS.
34920681A	21A	4
34920681A	21A	4
34920691A	21A	11
34920691A	21A	11
34920701A	21A	15
34920701A	21A	15
34920711A	21A	16
34920711A	21A	16
36011131B	021	24
36011141A	021	29
36011231AB	021	16
36521201A	028	2
36911241A	28A	1
37010902A	28A	8
38040101C	18C	4
38512051B	018	32
38640132A	027	21
38940191A	18B	5
38940201A	18B	5
38940221A	18B	5
38940241A	18B	5
38940251A	018	19
38940271A	18B	9
38940281A	18B	9
39040162A	27A	14
39040162A	27B	14
39040201A	020	9
39040211A	27A	4
39040211A	27B	4
39110033A	27A	1
39110033A	27B	1
39520132C	018	23
39740071A	018	18
40610964A	034	13
42020064A	016	6
42520011A	32A	9
42520011A	32A	9
42610071A	036	1
42610201A	029	10
43313571A	28A	28
43313571B	28A	28
43511501A	34A	24
43512801A	34A	25
43512911A	033	23
43713321A	34B	31
43713331A	34B	28
44212511A	029	7
44440035A	009	20
44610221A	28A	23
44710812B	28A	15
44710821B	28A	24
44710841A	034	8
44910571A	003	12
45110461A	008	4
45120272A	008	9
45120291A	008	10
45520181A	002	4
45612041A	022	15
45612051A	022	29
45720482A	025	6
46013551B	34B	7
46013561C	34B	8
46013941A	26A	14
46013951A	28A	16
46013972C	019	2
46013982B	019	30
46014011C	34B	9
46014122A	021	32
46014421A	018	34
46023842B	024	33
46023852B	023	25
46023963C	019	31
46240461A	034	15
46320222A	010	12
46320537A	003	14
46410591AA	022	23
46410591AA	027	13
46410601AA	022	18
46410601AA	027	6
470P7061BK	022	1
47110141CA	027	2
47110201AA	027	1
47317901A	025	7
48011502A	34A	1
48011511A	34A	3
48012912AA	34A	5
48012912AC	34A	5
48012931A	34A	6
48012943AC	34A	16
48012943AD	34A	16
48012953AC	34A	17
48012953AD	34A	17
48012963AA	34A	18
48012963AC	34A	18
48022903AA	34A	4
48022903AC	34A	4
48110802AA	034	1
48110802AC	034	1
48110821A	034	18
48110831A	034	17
48110862A	034	20
48110912A	034	19
48211601A	027	17
48211611A	027	18
48211621AC	033	12
48211621AD	033	12
48211631AC	033	8
48211631AD	033	8
48410851A	34A	7
48410861A	34A	8
48411061A	029	1
48610721A	005	16
48710611A	034	3
49210061A	26A	19
49241011A	026	5
49411401A	26A	10
49720012A	026	3
49720031A	026	16
50121631AT	026	10
50211551AT	026	7
50410051A	026	12
50410091A	26A	22
51017001A	18B	2
51018671A	18B	1
51310232A	018	35
51410601A	018	22
51410612A	018	15
51640011AB	18B	8
51840091A	034	11
52010232B	020	7
52310341A	021	9
52310351A	021	8
52510382A	27A	22
52510382A	27B	22
52910012A	21A	18
52910061B	27A	9
52910061B	27B	9
53010225A	27A	3
53010225A	27B	3
53010235A	27A	21
53010235A	27B	21
53010241B	024	34
53010251B	023	26
53910234B	22A	5
53940031A	025	5
53940302A	016	12
53940611A	023	22
53940621A	024	5
54040301B	018	3
54140101A	18B	3
54240391A	24A	6
54410132A	18A	1
54840861C	030	1
54840861C	030	1
54840871B	016	1
54910952A	016	7
54911012A	016	14
55212092A	019	12
55212111B	24A	5
55212121B	24A	2
55241321B	010	31
55241571A	017	6
55241571A	017	6
55241581A	029	15
55241612C	002	6
55242671A	031	9
55340041A	031	19
55610542A	22A	3
55620552B	22A	1
55920091B	027	4
56110261A	27A	8
56110261A	27B	8
56110461D	27A	6
56110461D	27B	6
56410801A	34B	22
56410881A	28A	17

CODE	NO. TABLE	POS.
56410921A	27B	33
56411061BA	34B	3
56411061BC	34B	3
56510461A	28A	21
56510471A	28A	19
56510532A	28A	27
57012842A	019	11
57112712C	019	14
57313151C	019	29
57313301A	019	24
57610671A	019	5
58510671A	029	13
58510701A	031	1
58540081A	023	12
58540081A	025	26
58540181A	024	15
58611654A	032	1
58611903A	032	1
59013091B	036	5
59013101A	036	4
59013101B	017	18
59013101B	017	18
59013131A	029	11
59013661A	017	19
59013661A	017	19
59023491A	036	2
59023972A	32A	2
59023972A	32A	2
59040051A	032	15
59040051A	032	15
59210211B	32A	5
59210211B	32A	5
59310601B	010	33
59320641D	010	11
59340392A	019	23
59511751A	033	1
59511761A	033	7
59511791A	033	1
59810121A	033	20
59810172B	032	12
59810172B	032	12
59810182B	032	12
59820671B	032	16
59820671B	032	16
59820846A	032	11
59820846A	032	11
59820945A	032	11
59840271A	033	17
59840311B	032	13
59840311B	032	13
59940021A	034	31
61040991A	024	9
61041001A	024	26
61140381A	025	20
61240052A	023	4
61240052A	024	21
61240081A	025	15
61240141A	024	31
61240161A	025	14
61240371A	024	30
61240391A	023	28
61240391A	024	37
61340381A	025	13
61340411A	024	8
61810371A	24A	7
61810381B	24A	8
61810391A	024	20
61910361B	24A	9
61910371B	24A	10
62440562A	024	1
62540201A	025	16
62640561A	023	20
62640561A	024	7
63040473A	023	1
63140081A	023	21
63140081A	024	6
63140161A	025	25
63140281A	023	19
63140281A	024	11
63140331A	024	2
63140341A	023	2
63210691A	023	6
65010131B	021	25
65110131A	021	14
65420291A	021	20
65540091A	029	21
65620722B	021	26
66810014A	011	16
66810481A	007	14
66910011E	014	6
66910011E	015	6
67040381A	18C	7
67110521A	18C	13
67110551A	18C	12
67110561A	18C	11
67110571A	18C	10
67620761A	26A	23
67640801A	26A	8
67740151A	26A	24
68010131A	006	10
68010131A	008	16
68050061A	013	12
69610131A	027	15
69720271A	033	15
69926201A	022	7
6AN155087	021	27
70010361A	012	12
70010431A	034	14
70010611A	021	10
70010621A	34B	10
70010731A	018	31
70090562A	26A	9
70140051A	003	4
70140171A	28A	6
70140351A	012	11
70240091A	011	11
70240102A	011	9
70240131D	010	19
70240181A	012	15
70240331A	010	21
70240331A	10A	2
70241151A	10A	11
70241161A	010	4
70241231A	021	6
70250081A	010	6
70250081A	011	4
70250193A	10A	1
70250451A	28A	10
70250601A	004	21
70250621A	026	8
70310131A	021	12
70310512AA	022	5
70350022A	013	2
70350062A	008	12
71011091A	28A	4
71011301A	34A	26
71011321A	028	3
71011491A	019	6
71011691A	006	7
710Z0031A	010	28
710Z0041A	10A	21
71110891A	006	6
71110951A	10A	7
71111601A	005	13
71111601A	011	14
71112191A	007	12
71113741A	013	19
71210291A	28A	9
71210301A	28A	12
71210341A	022	16
71210341A	025	10
71310141E	003	11
71311281B	011	27
71311871A	28A	11
71311961A	026	17
71311973A	026	2
71312661A	003	15
71312921A	014	9
71312921A	015	9
71312921B	014	25
71312921B	015	26
71313091A	004	13
71313931A	003	13
71314681A	018	8
71314831A	004	15
71314901A	24A	3
71314951A	27B	32
71319151A	002	29
71319171A	023	9
71319171A	024	36
71319181A	032	3
71319181A	032	3
71319191A	012	8
71319201A	24A	3
71319241A	27A	30
71319241A	27B	30

CODE	NO. TABLE	POS.
71319261A	004	18
71319331A	027	26
71319341A	27B	31
7131A031A	27A	5
7131A031A	27B	5
71410751A	26A	12
71410941A	026	9
71413231AA	026	15
71510081B	028	8
71610031A	016	3
71610061A	018	27
71610221B	019	17
71610431C	036	10
71610722A	008	20
71611281A	008	17
71614091A	18A	4
71614102AA	020	6
71614111A	34B	26
71614141A	019	7
71614191A	030	5
71614191A	030	5
71614252AA	34B	24
71614261A	017	23
71614261A	017	23
71614511AA	18C	2
720941616	010	17
720941616	10A	5
73210201A	033	22
73210291D	019	20
735001542	002	15
735033380	010	9
735033380	011	17
735033380	10A	10
73740251A	008	5
74110101A	18B	12
74110121A	18B	7
74110131A	18B	10
74110551A	18C	15
74140011A	031	7
74140331A	28A	25
74140381A	030	2
74140381A	030	2
74140431A	023	14
74140431A	024	16
74140431A	025	17
74140431A	036	11
74140571A	036	3
74140581A	017	17
74140581A	017	17
74140581A	036	7
74140651A	029	12
74141651A	029	9
74141711A	017	16
74141711A	017	16
74141861A	029	8
74141871A	017	13
74141871A	017	13
74141901A	031	5
74141921A	007	7
74141921A	031	21
74142251A	029	17
74142261A	029	24
74750071A	021	1
74810241A	019	3
74810351B	023	13
74810351B	024	18
74810351B	18C	5
74810361A	017	25
74810361A	017	4
74810401A	002	23
74810461A	26A	4
74810501A	010	14
74810651A	026	1
74840021A	022	3
74840381A	034	16
74910021A	036	6
74940081A	008	7
74940081A	34B	11
74941108B	32A	7
74941118B	27B	35
74941128B	22A	8
74950011B	27A	12
74950011B	27B	12
75010071A	003	29
75010071A	004	7
75011391A	026	13
75011391A	26A	2
75011551A	033	14
75011561A	006	13
75011601A	008	15
75011761A	006	14
75620131A	26A	13
757941542	10A	9
75810581A	020	4
75840171A	018	14
75840591A	18A	10
75840601A	24A	18
75910222A	026	19
75910222A	26A	20
764020002	003	17
76410241A	016	2
76410241A	018	7
76410241A	019	8
76410241A	027	28
76410241A	030	4
76410241A	030	4
76410241A	18A	3
76410241A	18C	3
76410241A	27A	15
76410241A	27B	15
76410291A	036	18
76410481A	34A	13
76410621B	018	5
76410641A	018	28
76410641A	027	29
76410841A	34B	23
76410871A	014	8
76410871A	015	8
76410901A	019	16
76410901A	27A	27
76410901A	27B	27
76411141A	020	5
76411301A	019	25
76411322A	022	17
76411331A	020	8
76411361A	030	11
76411361A	030	9
76411381A	34B	20
76411651A	034	4
76510021A	022	24
76510021A	027	16
76510031A	022	19
76510031A	027	12
76610553B	010	16
76610891A	014	21
76610891A	015	21
768351134	002	10
77052508B	011	6
77110351A	027	5
77110401B	023	10
77110401B	024	10
77110411A	020	10
77110518B	011	5
77110518B	012	7
77110521A	012	6
77110531A	020	3
77112331A	017	2
77112331A	017	2
77113771B	021	19
77113801A	008	6
77113831A	012	5
77113931A	011	37
77116648B	016	8
77116648B	028	6
77140673C	011	3
77140693C	011	19
77140697C	009	10
77140713C	011	15
77150068B	010	32
77150408B	011	2
77150478B	032	9
77150478B	032	9
77150658B	010	2
77150663B	011	20
77150670ZF	002	28
77150693B	005	5
77150708B	025	2
77150713B	005	19
77150723B	10A	14
77150808B	10A	15
77150813B	005	3
77150833B	005	2
77151250ZF	002	30
77151298B	009	8
77151363B	10A	22
77151398B	010	10

CODE	NO. TABLE	POS.
77151398B	10A	17
77151558B	022	12
77156398B	27A	25
77156398B	27B	25
77156398B	32A	1
77156398B	32A	1
77156443B	023	24
77156443B	024	32
77156628B	018	21
77156628B	031	3
77156653B	025	24
77156658B	019	21
77156658B	28A	26
77156668B	022	31
77156678B	004	6
77156678B	017	24
77156678B	017	24
77156678B	025	19
77156688B	019	22
77156698B	028	7
77156713B	021	4
77156713B	024	19
77156713B	21A	14
77156713B	21A	14
77156718B	017	20
77156718B	017	20
77156718B	023	23
77157238B	025	12
77157268C	022	13
77157278B	021	13
77159313B	021	17
77159378B	028	1
77159418B	021	28
77210422A	029	6
77210591A	024	29
77210601A	24A	1
77210621A	32A	7
77210623B	031	15
77210841B	034	22
77210841B	28A	13
77210852A	018	13
77210852A	18A	17
77210852A	34A	11
77210853B	017	8

CODE	NO. TABLE	POS.
77210853B	017	8
77210853B	027	24
77210853B	029	14
77210853B	033	13
77210853B	18A	13
77210853B	34A	14
77210853B	34B	5
77210943B	28A	7
77210971B	018	26
77211021A	34A	23
77211052A	28A	3
77211061A	18B	13
77211071B	28A	22
77211082B	027	3
77211091A	021	22
77211091C	033	16
77211091C	034	21
77211091C	34A	9
77211121C	34A	15
77211141A	020	2
77211171A	034	9
77211181A	034	24
77211181A	34B	27
77211201A	004	3
77211211B	28A	20
77211231A	27A	2
77211231A	27B	2
77211341A	18B	14
77213173B	019	1
77213178B	34B	17
77213218B	34B	25
77240263C	27A	19
77240263C	27B	34
77240278C	27A	23
77240278C	27B	23
77240323C	27B	19
77240398C	018	12
77240438C	017	5
77240438C	017	5
77240443C	018	2
77240458C	019	18
77240508C	032	7
77240508C	032	7
77250121B	030	3

CODE	NO. TABLE	POS.
77250121B	030	3
77250341B	010	34
77250341C	008	22
77250978B	036	15
77251038B	016	4
77251038B	18A	5
77251308B	34B	18
77350403B	013	23
77350403B	18C	9
77350618B	014	20
77350618B	017	4
77350618B	10A	13
77354743B	18C	1
77354888B	018	9
77354898B	032	4
77354898B	032	4
77440041A	018	29
77440041A	029	23
77440041A	18A	9
77440041A	24A	16
77440061A	27A	29
77440061A	27B	29
77440071A	019	28
77450131A	023	27
77450131A	024	35
77450151A	034	12
77450151A	34A	12
77450181A	18A	16
77510041A	029	16
77510171A	036	14
77510171C	017	12
77510171C	017	12
77510311B	010	25
77510311B	10A	20
77510351A	030	9
77510491A	27B	36
77510631A	26A	1
77550131A	27A	7
77550131A	27B	7
77550211A	010	29
77550213C	26A	11
77550271A	022	30
77550271A	036	9
77550291A	028	10

CODE	NO. TABLE	POS.
77710021B	009	16
77750493C	011	24
77840041A	009	18
77910262A	011	10
77910391A	002	3
77910921A	023	7
77910921A	024	13
77910991B	021	2
77911092A	006	2
77911622A	009	13
77911982A	011	36
77912033A	002	7
77912371B	025	8
77913141B	24A	19
77913661AB	023	16
77913661AB	024	3
77913661AB	025	22
77913661AB	24A	17
77913971A	023	5
77913971A	024	23
77913991A	026	4
77914043B	006	9
77914211A	014	23
77914211A	015	23
77914271A	019	19
77914391C	34B	1
77914391D	027	23
77914651A	024	28
77914871A	018	16
77914881A	26A	21
77914982B	033	19
77915011A	005	7
77915031A	28A	18
77915041A	028	4
77915093A	013	3
77915111B	024	25
77915471A	006	4
77915841C	022	6
77915851A	022	4
77915941B	34B	12
77915951C	34B	13
77916021B	027	20
77916081A	030	8
77916081A	030	8

ALPHANUMERIC INDEX

CODE	NO. TABLE	POS.
77916143A	34A	19
77916161C	022	8
77916221B	22A	2
77916281C	021	18
77916371A	34B	19
77916501AD	10A	24
77916591A	021	31
77916631A	27A	16
77916631A	27B	16
77917101A	10A	29
77917351BA	034	6
77917481AA	022	9
77917491AA	022	11
77917622AA	034	5
77940053A	22A	4
77950302A	013	16
77950621A	10A	12
78010511E	014	12
78010511E	015	12
78010721A	10A	6
78020011A	019	9
78050012A	005	6
78050012A	011	33
78611001A	007	11
78611251A	007	13
78810542A	012	4
78810931A	013	9
78810962A	017	9
78810962A	017	9
78810971A	017	10
78810971A	017	10
78811121A	029	4
78811151A	010	35
78811211A	013	8
79010211A	019	4
79110782A	34A	27
79120482A	007	6
79710531A	004	1
79910241A	027	10
79910485A	019	13
79910491A	002	1
79912781A	004	10
79914821A	002	20
79914851A	014	19
79914851A	015	19
79914861A	014	18
79914861A	015	18
79914991A	022	22
79915071A	025	4
79915081A	22A	6
79915181A	014	26
79915181A	015	27
79915191A	014	27
79915191A	015	28
79915731A	034	25
79920772A	009	14
79921602A	22A	7
79925643AB	034	7
79940121A	10A	23
800068490	024	14
800070139	01B	8
80011221A	007	9
80011231A	007	8
80011591A	031	18
80011601C	031	17
80011611A	031	16
80011631A	031	13
80110361A	029	5
80811271AA	024	24
80811281AA	023	18
81110021A	010	36
81140012B	013	21
81411113B	036	12
81411831A	036	8
81411881A	015	25
81412351B	031	14
81412361C	031	11
81413341A	017	15
81413341A	017	15
81510221A	016	5
81510281A	009	12
81810162A	004	5
81910601A	026	11
819Z0021A	26A	6
82110011A	002	26
82110681B	022	20
82110681B	027	7
82111032A	22A	9
82111701B	022	27
82111701B	025	9
82112221B	014	17
82112221B	015	17
82112231B	014	15
82112231B	015	15
82112681A	002	13
82113291B	021	33
82113311A	025	1
82113471A	012	9
82113901A	033	21
82114391B	034	26
82411693AA	027	9
82411703AA	027	8
82510441A	26A	17
82610293A	002	5
82711571A	036	17
82712981B	27A	10
82712981B	27B	10
82714331A	005	14
82714821A	033	18
82715481A	016	9
82716031A	010	37
82716351A	013	20
82911901A	18A	2
82919901A	018	11
82919963A	18A	12
82919971A	18A	11
82919981A	019	26
82919991A	18A	14
8291A781A	029	22
8291A791A	036	16
8291A802A	018	6
8291A812A	034	2
8291A822A	034	27
8291A831A	018	33
82929891A	020	1
83011441A	011	35
83015221B	34B	14
83015251A	34B	16
83015401A	18A	8
83015483A	27A	26
83015483A	27B	26
83015571A	022	14
83015601A	018	4
83015621A	018	17
83015651D	024	27
83015681C	34A	22
83015731B	34B	15
83015872C	028	5
83017081A	24A	12
83017251A	018	30
83017281BA	18C	6
83017291BA	18C	14
83024041A	030	6
83024041A	030	6
83110151A	10A	27
83210031C	28A	14
83510111A	028	9
84010011A	014	1
84010011A	015	1
84010021A	014	1
84010021A	015	1
84010031A	014	1
84010031A	015	1
84010041A	014	1
84010041A	015	1
84010051A	014	1
84010051A	015	1
84010061A	014	1
84010061A	015	1
84010071A	014	1
84010071A	015	1
84010081A	014	1
84010081A	015	1
84010091A	014	1
84010091A	015	1
84010101A	014	1
84010101A	015	1
84010111A	014	1
84010111A	015	1
84010121A	014	1
84010121A	015	1
84010131A	014	1
84010131A	015	1
84010141A	014	1
84010141A	015	1
84010151A	014	1

CODE	NO. TABLE	POS.
84010151A	015	1
84010161A	014	1
84010161A	015	1
84010171A	014	1
84010171A	015	1
84010181A	014	1
84010181A	015	1
84010191A	014	1
84010191A	015	1
84010201A	014	1
84010201A	015	1
84010211A	014	1
84010211A	015	1
84010221A	014	1
84010221A	015	1
84010231A	014	1
84010231A	015	1
84010241A	014	1
84010241A	015	1
84010251A	014	1
84010251A	015	1
84010261A	014	1
84010261A	015	1
84010271A	014	1
84010271A	015	1
84010281A	014	1
84010281A	015	1
84010291A	014	1
84010291A	015	1
84010301A	014	1
84010301A	015	1
84010311A	014	1
84010311A	015	1
84010321A	014	1
84010321A	015	1
84010331A	014	1
84010331A	015	1
84010341A	014	1
84010341A	015	1
84010412B	014	2
84010412B	015	2
84010422B	014	2
84010422B	015	2
84010432B	014	2
84010432B	015	2
84010442B	014	2
84010442B	015	2
84010452B	014	2
84010452B	015	2
84010462B	014	2
84010462B	015	2
84010472B	014	2
84010472B	015	2
84010482B	014	2
84010482B	015	2
84010492B	014	2
84010492B	015	2
84010502B	014	2
84010502B	015	2
84010512B	014	2
84010512B	015	2
84010522B	014	2
84010522B	015	2
84010532B	014	2
84010532B	015	2
84010542B	014	2
84010542B	015	2
84010552B	014	2
84010552B	015	2
84010562B	014	2
84010562B	015	2
84010572B	014	2
84010572B	015	2
84010582B	014	2
84010582B	015	2
84010592B	014	2
84010592B	015	2
84010602B	014	2
84010602B	015	2
84010612B	014	2
84010612B	015	2
84010622B	014	2
84010622B	015	2
84010632B	014	2
84010632B	015	2
84010642B	014	2
84010642B	015	2
84010652B	014	2
84010652B	015	2
84010662B	014	2
84010662B	015	2
84010672B	014	2
84010672B	015	2
84010682B	014	2
84010682B	015	2
84010692B	014	2
84010692B	015	2
84010702B	014	2
84010702B	015	2
84010712B	014	2
84010712B	015	2
84010722B	014	2
84010722B	015	2
84010732B	014	2
84010732B	015	2
84010742B	014	2
84010742B	015	2
84010752B	014	2
84010752B	015	2
84010762B	014	2
84010762B	015	2
84010772B	014	2
84010772B	015	2
84010782B	014	2
84010782B	015	2
84010792B	014	2
84010792B	015	2
84010802B	014	2
84010802B	015	2
84010812B	014	2
84010812B	015	2
84010822B	014	2
84010822B	015	2
84010832B	014	2
84010832B	015	2
84010842B	014	2
84010842B	015	2
84010852B	014	2
84010852B	015	2
84010862B	014	2
84010862B	015	2
84010872B	014	2
84010872B	015	2
84740021A	027	11
84740061A	10A	25
84840111A	022	2
84840401A	022	28
85012121A	34B	4
85012162A	016	11
85040381A	016	10
85040381A	017	21
85040381A	017	21
85040381A	018	1
85040381A	027	30
85040381A	033	4
85040381A	27A	24
85040381A	27B	24
85040381A	34B	30
85040471A	018	25
85040471A	027	31
85040471A	033	11
85040471A	034	23
85040471A	27A	17
85040471A	27B	17
85040471A	34A	10
85040551A	019	15
85040551A	27A	18
85040551A	27B	18
85040551A	34B	6
85040671A	18B	6
85041471A	027	19
85110041A	003	16
85110131A	008	14
85110201A	004	8
85140051A	006	12
85210051A	002	14
85210532A	002	2
85210941A	002	19
85211031A	021	11
85211141A	011	34
85211201A	011	38
85211351A	005	10
85211511A	022	26
85211511A	025	3
85211721A	011	7
85211861A	019	10

CODE	NO. TABLE	POS.
85211911A	032	14
85211911A	032	14
85211951A	009	7
85211951A	016	13
85211961B	032	6
85211961B	032	6
85212171A	26A	15
85212181A	033	10
85212181A	34A	20
85212211A	026	14
85212211A	26A	3
85212221A	026	6
85212461A	10A	26
85212571A	28A	2
85212881D	006	11
85213231A	006	3
85241711A	030	10
85241711A	27B	28
85241731A	019	27
85241731A	27A	28
85250011C	27A	11
85250011C	27B	11
85250231A	011	30
85250231A	014	28
85250231A	015	20
85250231A	017	3
85250231A	017	3
85250231A	036	13
85250231A	10A	16
85250241A	005	17
85250241A	011	32
85250241A	023	17
85250241A	024	4
85250241A	025	23
85250241A	24A	11
85250261A	011	25
85250261B	014	11
85250261B	015	11
85250261B	24A	20
85250311A	34B	29
85250421A	010	5
85250421A	031	20
85310021A	008	8
85310021A	009	9
85310031A	010	30
85310041A	009	11
85350101A	018	20
85350111A	021	15
85550001B	18B	4
85610622A	008	19
85610642A	010	15
85610743A	013	4
85610751A	012	3
85611271A	34B	2
85611361A	033	9
85611361A	34A	2
85611372A	003	6
85611391A	004	2
85611481A	010	18
85611481A	10A	4
86010041A	011	21
86010051B	010	26
86050061A	014	24
86050061A	015	24
86610191A	033	2
86610301A	033	3
86610451A	24A	13
86610611A	033	6
86610951A	032	5
86610951A	032	5
86610971A	032	8
86610971A	032	8
86610981A	018	24
86611031A	018	10
86611091A	032	2
86611091A	032	2
86611131A	034	10
86611221B	027	22
86611241A	18A	6
86611251A	033	24
86611292A	017	22
86611292A	017	22
86611571A	034	28
86640051A	24A	15
87210451A	027	25
87210641A	021	7
87210661A	34A	21
87210691A	021	21
87240561A	022	10
87240561A	027	27
87240601A	030	7
87240601A	030	7
87310051A	013	13
87511461B	010	24
87511461B	10A	19
87611061A	029	2
87611141A	029	18
87611152A	029	20
87611163A	029	19
87711111A	023	15
87711111A	024	17
87711541A	025	21
88110121A	002	16
88110341A	012	2
88110461A	031	4
88110541A	26A	7
88110731A	34B	21
88210031A	008	11
88210151A	003	7
88440511A	26A	18
88440641A	010	39
88440651A	010	38
88450031A	022	21
88450031A	027	14
88450111A	011	8
88450131A	005	11
88450341B	002	22
88450581A	10A	28
88610241A	010	27
88610951A	011	22
88640331A	009	4
88640331A	010	23
88640371A	009	6
88640891A	005	18
88640891A	029	3
88641031A	031	10
88641161A	022	25
88641161A	025	11
88641181A	010	13
88641241A	26A	16
88641321A	005	12
88641321A	009	5
88641321A	010	8
88641581A	009	2
88641731A	004	17
88650131A	010	3
88650131A	10A	18
88650431A	32A	6
88650431A	32A	6
88650511A	013	1
88650571A	32A	4
88650571A	32A	4
887130869	001	15
887130870	001	16
887130944	01A	12
887131010	01A	2
887131058	01B	7
887131062	01B	9
887131068	01B	2
887131072	01B	1
887131074	01B	4
887131515	01B	6
887131749	01A	13
887131805	01A	3
887131806	01A	6
887131821	01A	9
887131832	001	9
887131886	001	13
887131920	01A	8
887131980	01A	16
887131994	01A	20
887132011	01A	7
887132069	001	19
887132103	001	7
887132409	01B	11
887132442	001	2
887132676	001	1
887132834	01A	17
887132861	01A	15
887132870	01A	10
887132877	01A	18
887132878	001	5
887132906	001	6
887132951	01B	3
887133203	01B	12
887133204	01B	14

CODE	NO. TABLE	POS.
887133211	01B	5
887133219	01A	19
887133334	001	11
887133352	001	18
887133367	001	8
887133396	01B	15
887133406	01A	4
887133407	001	17
887133408	001	10
887133417	001	12
887133497	01A	1
887133501	01B	10
887133521	01A	11
887133526	01B	13
887651000	001	14
887651005	001	14
887651006	001	14
887651298	001	3
887651518	01A	5
887651623	01A	14
887651657	001	4
89310143A	031	2
89320062A	010	7
89320121A	005	15
89340051A	023	11
89340051A	025	27
89410241A	009	3
89510342B	032	10
89510342B	032	10
8A0067610	031	12
91372031A	033	5
91372031B	033	5
91372031C	033	5
91372031D	033	5
91372031E	033	5
91372031F	033	5
91372031G	033	5
91372031T	033	5
91372031W	033	5
93010041B	021	5
93040211A	005	9
93040221A	010	20
93040931A	010	22
93041231A	10A	8

CODE	NO. TABLE	POS.
93041501A	026	18
93050051A	011	26
93050062B	011	28
93050071A	013	17
93050121A	28A	5
93410111A	031	6
93410131B	031	8
937831524	011	18
942470014	011	12
942470014	10A	3
979000252	01C	1
979000253	01C	2
979000254	01C	3
979000255	01C	4
979000256	01C	5

Ducati Motor Holding S.p.A.
Uffici Commerciali Amministrativi:
Via A. Cavalieri Ducati n. 3
40132 Bologna, Italy
Telefono 051 6413111
Fax 051 406580
Internet www.ducati.com