796 ABS
Model Year 2013

MONSTER

Chassis prefix:
Cylinder capacity: 796

D03000013
SPARE PARTS CATALOGUE
en-US

The present spare parts order exactly the right spare parts.

When ordering specify:

1. the part's code number followed by its description and quantity needed;
2. the motorcycle's serial number, stamped on the steering head.

Reference to right and left apply to the vehicle in terms of its direction of move-ment.

Spare parts drawings are general and do not represent the part.

The contents of this catalogue are general and can undergo changes without prior notice.

CHARACTERISTICS LEGENDA

CHARACTERISTIC CODE	CHARACTERISTIC DESCRIPTION	VALUE CODE	VALUE DESCRIPTION
CPT	PARTICOLAR CHARACTERISTICS	DEP	
CPT	PARTICOLAR CHARACTERISTICS	DEP35	
CPT	PARTICOLAR CHARACTERISTICS	STD	MOTO STANDARD
DFR	DAFRA	N	NO
MOD	MODEL	M796 ABS	
PLT	PLANT	DB10	
XCO	MAIN COLOUR	ART	
XCO	MAIN COLOUR	AWS	
XCO	MAIN COLOUR	MTBS	
XCO	MAIN COLOUR	R	
XCR	FRAME / WHEEL COLOUR	R-B	
XST	STANDARD COUNTRY	AUS	
XST	STANDARD COUNTRY	EUR	
XST	STANDARD COUNTRY	JAP	

COLOUR	COLOUR CODE	COLOUR DESCRIPTION	FINISHED PRODUCTS
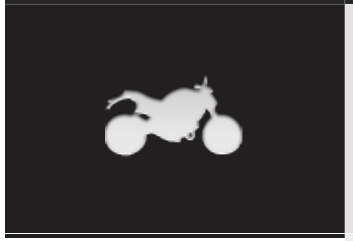	ART	VERSIONE ARTE MONSTER	(D03031613) M 796 ABS 13 EUR ART R-B STD DMH (D03033713) M 796 ABS 13 EUR ART R-B DEP35 DMH (D03038713) M 796 ABS 13 EUR ART R-B DEP DMH
	AWS	ARTIC WHITE SILK	(D03043313) M 796 ABS 13 EUR AWS R-B STD DMH (D03045213) M 796 ABS 13 EUR AWS R-B DEP35 DMH (D03046513) M 796 ABS 13 JAP AWS R-B STD DMH (D03048313) M 796 ABS 13 EUR AWS R-B DEP DMH (D03048513) M 796 ABS 13 AUS AWS R-B STD DMH
	MTBS	DIAMOND BLACK SILK	(D03043413) M 796 ABS 13 EUR MTBS R-B STD DMH (D03045313) M 796 ABS 13 EUR MTBS R-B DEP35 DMH (D03046613) M 796 ABS 13 JAP MTBS R-B STD DMH (D03048413) M 796 ABS 13 EUR MTBS R-B DEP DMH (D03048613) M 796 ABS 13 AUS MTBS R-B STD DMH
	R	RED DUCATI	(D03028313) M 796 ABS 13 EUR R R-B STD DMH (D03029913) M 796 ABS 13 AUS R R-B STD DMH (D03030913) M 796 ABS 13 JAP R R-B STD DMH (D03033413) M 796 ABS 13 EUR R R-B DEP35 DMH (D03036613) M 796 ABS 13 EUR R R-B DEP DMH

General information....3
Colours....4
Group ELECTRIC....8
Drawing 018 - WIRING HARNESS [MOD:M796 ABS;XST:AUS,EUR,JAP]....8
Drawing 019 - BATTERY [MOD:M796 ABS;XST:AUS,EUR,JAP]....10
Drawing 021 - METER [MOD:M796 ABS;XST:AUS,EUR,JAP]....14
Drawing 022 - HEADLIGHT [MOD:M796 ABS;XST:AUS,EUR,JAP]....16
Drawing 023 - TAILLIGHT [MOD:M796 ABS;XST:AUS,EUR,JAP]....20
Drawing 23A - TAILLIGHT AUS [MOD:M796 ABS;XST:AUS,EUR,JAP]....24
Group ENGINE....28
Drawing 002 - SHIFT CAM - FORK [MOD:M796 ABS;XST:AUS,EUR,JAP]....28
Drawing 003 - GEAR BOX [MOD:M796 ABS;XST:AUS,EUR,JAP]....32
Drawing 004 - CLUTCH [MOD:M796 ABS;XST:AUS,EUR,JAP]....36
Drawing 005 - CLUTCH COVER [MOD:M796 ABS;XST:AUS,EUR,JAP]....40
Drawing 006 - CRANKSHAFT [MOD:M796 ABS;XST:AUS,EUR,JAP]....42
Drawing 007 - CYLINDER - PISTON [MOD:M796 ABS;XST:AUS,EUR,JAP]....46
Drawing 008 - TIMING BELT [MOD:M796 ABS;XST:AUS,EUR,JAP]....48
Drawing 009 - OIL PUMP - FILTER [MOD:M796 ABS;XST:AUS,EUR,JAP]....50
Drawing 010 - CRANKCASE [MOD:M796 ABS;XST:AUS,EUR,JAP]....52
Drawing 011 - GENERATOR [MOD:M796 ABS;XST:AUS,EUR,JAP]....58
Drawing 012 - STARTING MOTOR [MOD:M796 ABS;XST:AUS,EUR,JAP]....60
Drawing 013 - CAMSHAFT [MOD:M796 ABS;XST:AUS,EUR,JAP]....62
Drawing 014 - VERTICAL CYLINDER HEAD [MOD:M796 ABS;XST:AUS,EUR,JAP]....64
Drawing 015 - HORIZONTAL CYLINDER HEAD [MOD:M796 ABS;XST:AUS,EUR,JAP]....72
Drawing 016 - THROTTLE BODY [MOD:M796 ABS;XST:AUS,EUR,JAP]....80
Group TOOLS....84
Drawing 001 - WORKSHOP SERVICE TOOLS, ENGINE [MOD:M796 ABS;XST:AUS,EUR,JAP]....84
Drawing 01A - WORKSHOP SERVICE TOOLS, FRAME [MOD:M796 ABS;XST:AUS,EUR,JAP]....86
Drawing 01B - DDS (2) TESTER [MOD:M796 ABS;XST:AUS,EUR,JAP]....88

Group FRAME....90
Drawing 017 - SIDE STAND [MOD:M796 ABS;XST:AUS,EUR,JAP]....90
Drawing 020 - EXHAUST SYSTEM [MOD:M796 ABS;XST:AUS,EUR,JAP]....92
Drawing 024 - FRONT FORK [MOD:M796 ABS;XST:AUS,EUR,JAP]....98
Drawing 025 - WHEELS [MOD:M796 ABS;XST:AUS,EUR,JAP]....102
Drawing 026 - HANDLEBAR [MOD:M796 ABS;XST:AUS,EUR,JAP]....106
Drawing 027 - CLUTCH MASTER CYLINDER [MOD:M796 ABS;XST:AUS,EUR,JAP]....112
Drawing 028 - FRONT BRAKE SYSTEM [MOD:M796 ABS;XST:AUS,EUR,JAP]....114
Drawing 029 - REAR BRAKE SYSTEM [MOD:M796 ABS;XST:AUS,EUR,JAP]....118
Drawing 030 - FRAME [MOD:M796 ABS;XST:AUS,EUR,JAP]....122
Drawing 031 - FOOTRESTS, LEFT [MOD:M796 ABS;XST:AUS,EUR,JAP]....126
Drawing 032 - SWING ARM [MOD:M796 ABS;XST:AUS,EUR,JAP]....130
Drawing 033 - REAR SHOCK ABSORBER [MOD:M796 ABS;XST:AUS,EUR,JAP]....134
Drawing 034 - INTAKE [MOD:M796 ABS;XST:AUS,EUR,JAP]....136
Drawing 035 - FUEL TANK [MOD:M796 ABS;XST:AUS,EUR,JAP]....140
Drawing 036 - FUEL PUMP [MOD:M796 ABS;XST:AUS,EUR,JAP]....144
Drawing 037 - SEAT [MOD:M796 ABS;XST:AUS,EUR,JAP]....146
Drawing 038 - FAIRING [MOD:M796 ABS;XST:AUS,EUR,JAP]....150
Drawing 039 - OIL COOLER [MOD:M796 ABS;XST:AUS,EUR,JAP]....154
Drawing 042 - ART KIT [MOD:M796 ABS;XST:AUS,EUR,JAP]....156
Drawing 25A - REAR WHEEL SPINDLE [MOD:M796 ABS;XST:AUS,EUR,JAP]....158
Drawing 28A - BRAKING SYSTEM ABS [MOD:M796 ABS;XST:AUS,EUR,JAP]....162
Drawing 31A - FOOTRESTS, RIGHT [MOD:M796 ABS;XST:AUS,EUR,JAP]....166
Alphanumeric index....168

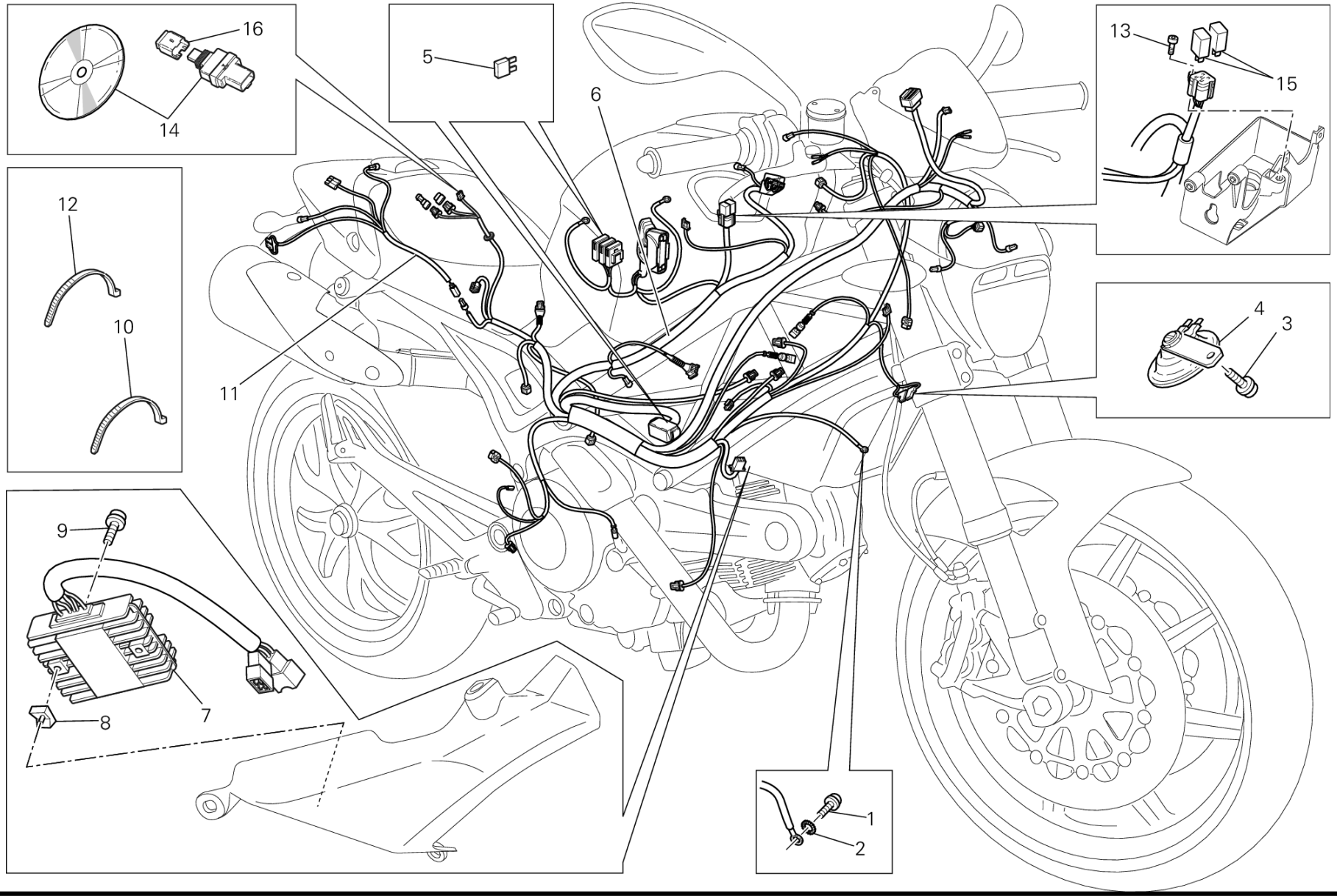
16
14
5
6
13
15
12
10
11
4
3
9
8
7
1
2

POS.	CODE	DESCRIPTION	QTY	START DATE	END DATE	VALIDITY	NOTES
1	77914272A	SCREW	1	23/02/2012		DFR:N;MOD:M796 ABS;XST:AUS,EUR,JAP	
2	85550001B	ALUMINIUM GASKET	1	23/02/2012		DFR:N;MOD:M796 ABS;XST:AUS,EUR,JAP	
3	77113691A	SCREW TCEIF M6X12	1	15/03/2012		DFR:N;MOD:M796 ABS;PLT:DB10;XST:AUS,EUR,JAP	
4	51640042B	HORN	1	23/02/2012		DFR:N;MOD:M796 ABS;XST:AUS,EUR,JAP	
5	38940191A	FUSE 5A	1			MOD:M796 ABS;XST:AUS,EUR,JAP	
	38940201A	FUSE 10A	1			MOD:M796 ABS;XST:AUS,EUR,JAP	
	38940211A	FUSE 15A	1			MOD:M796 ABS;XST:AUS,EUR,JAP	
	38940221A	FUSE 20A	1			MOD:M796 ABS;XST:AUS,EUR,JAP	
	38940241A	FUSE 7,5A	1			MOD:M796 ABS;XST:AUS,EUR,JAP	
6	51017261A	WIRING HARNESS	1	23/02/2012		DFR:N;MOD:M796 ABS;XST:AUS,EUR,JAP	
7	54040111C	VOLTAGE REGULATOR	1	23/02/2012		DFR:N;MOD:M796 ABS;XST:AUS,EUR,JAP	
8	85040381A	QUICK FASTENING	2	23/02/2012		DFR:N;MOD:M796 ABS;XST:AUS,EUR,JAP	
9	77156678B	SCREW TCEIF M6X20	2	23/02/2012		DFR:N;MOD:M796 ABS;XST:AUS,EUR,JAP	
10	069191030	CLAMP	16	23/02/2012		DFR:N;MOD:M796 ABS;XST:AUS,EUR,JAP	
11	51016391B	CABLE, TAILLIGHT	1	23/02/2012		DFR:N;MOD:M796 ABS;XST:AUS,EUR,JAP	
12	74140381A	CLAMP	21	23/02/2012		DFR:N;MOD:M796 ABS;XST:AUS,EUR,JAP	
13	77240258C	SCREW	1	23/02/2012		DFR:N;MOD:M796 ABS;XST:AUS,EUR,JAP	
14	28620401A	DATA ACQUISITION KIT	1			MOD:M796 ABS;XST:AUS,EUR,JAP	
15	54140101A	RELAY	1			MOD:M796 ABS;XST:AUS,EUR,JAP	
16	87210532A	CAP DDA	1			MOD:M796 ABS;XST:AUS,EUR,JAP	

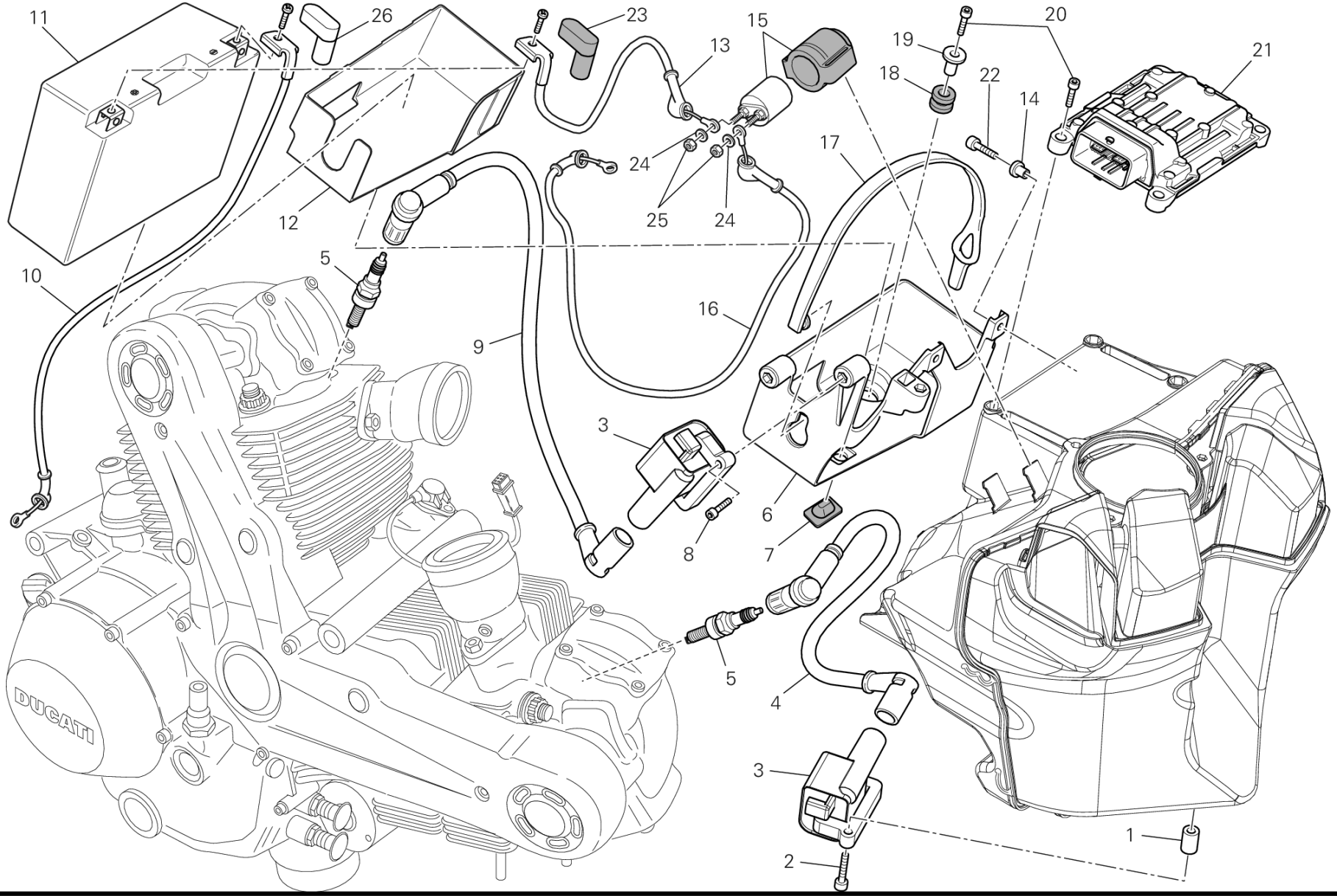
11
26
23
15
13
19
20
21
18
22
14
17
24
25
24
12
5
10
16
9
3
6
8
7
5
4
3
2
1

POS.	CODE	DESCRIPTION	QTY	START DATE	END DATE	VALIDITY	NOTES
1	71112641A	BUSH 5.5X10X17	2	23/02/2012		DFR:N;MOD:M796 ABS;XST:AUS,EUR,JAP	
2	77150488B	SCREW TCEI M5X35	2	23/02/2012		DFR:N;MOD:M796 ABS;XST:AUS,EUR,JAP	
3	38010151A	IGNITION COIL	2	23/02/2012		DFR:N;MOD:M796 ABS;XST:AUS,EUR,JAP	
4	67110312B	CABLE, VERTICAL HEAD SPARK PLUG LH	1	23/02/2012		DFR:N;MOD:M796 ABS;XST:AUS,EUR,JAP	
5	67040351A	SPARK PLUG CHAMPION RA6HC	2	15/03/2012		DFR:N;MOD:M796 ABS;XST:AUS,EUR,JAP	
6	82919641B	BATTERY HOLDER	1	23/04/2010		DFR:N;MOD:M796 ABS;XST:AUS,EUR,JAP	
7	86610301A	PAD	1	23/02/2012		DFR:N;MOD:M796 ABS;XST:AUS,EUR,JAP	
8	77150428B	SCREW TCEI M5X18	2	23/02/2012		DFR:N;MOD:M796 ABS;XST:AUS,EUR,JAP	
9	67110282B	CABLE, HORIZONTAL HEAD SPARK PLUG LH	1	23/02/2012		DFR:N;MOD:M796 ABS;XST:AUS,EUR,JAP	
10	51310221A	CABLE	1	23/02/2012		DFR:N;MOD:M796 ABS;XST:AUS,EUR,JAP	
11	39520132C	BATTERY	1	23/02/2012		DFR:N;MOD:M796 ABS;XST:AUS,EUR,JAP	
12	86610981A	BATTERY CARPET	1	23/02/2012		DFR:N;MOD:M796 ABS;XST:AUS,EUR,JAP	
13	51410641A	BATTERY - SOLENOID STARTER CABLE	1	23/02/2012		DFR:N;MOD:M796 ABS;XST:AUS,EUR,JAP	
14	71611521A	SPACER WITH COLLAR	2	23/02/2012		DFR:N;MOD:M796 ABS;XST:AUS,EUR,JAP	
15	39740031B	STARTER RELAY	1	23/02/2012		DFR:N;MOD:M796 ABS;XST:AUS,EUR,JAP	
16	51410581A	WIRE STARTER MOTOR	1	23/02/2012		DFR:N;MOD:M796 ABS;XST:AUS,EUR,JAP	
17	75910231A	BAND BATTERY	1	23/02/2012		DFR:N;MOD:M796 ABS;XST:AUS,EUR,JAP	

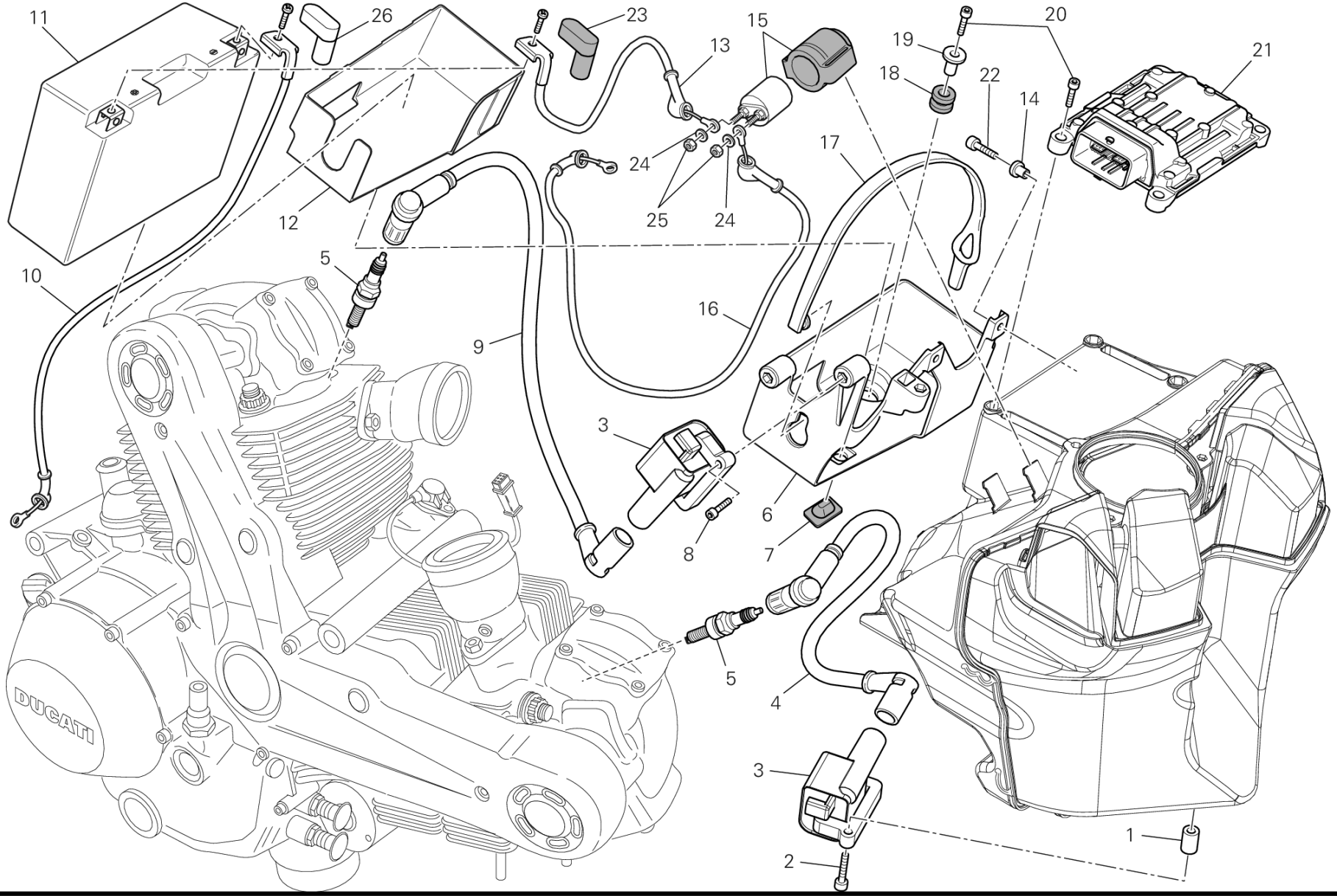
11
26
23
15
13
19
20
21
18
22
14
17
24
25
24
12
5
10
16
9
3
6
8
7
5
4
3
2
1

POS.	CODE	DESCRIPTION	QTY	START DATE	END DATE	VALIDITY	NOTES
18	76410901A	RUBBER PAD	1	23/04/2010		DFR:N;MOD:M796 ABS;XST:AUS,EUR,JAP	
19	71610221B	SPACER	1	23/02/2012		DFR:N;MOD:M796 ABS;XST:AUS,EUR,JAP	
20	77156678B	SCREW TCEIF M6X20	5	23/02/2012		DFR:N;MOD:M796 ABS;XST:AUS,EUR,JAP	
21	28641991A	ENGINE CONTROL UNIT	1	23/02/2012		CPT:STD;DFR:N;MOD:M796 ABS;XST:AUS,EUR	EUR-BRA-AUS
	28641991F	ENGINE CONTROL UNIT	1	23/02/2012		CPT:STD;DFR:N;MOD:M796 ABS;XST:JAP	JAP
	28641991G	ENGINE CONTROL UNIT	1	23/02/2012		DFR:N;MOD:M796 ABS;XST:EUR	TWN
	28642021A	ENGINE CONTROL UNIT	1	23/02/2012		DFR:N;MOD:M796 ABS;XST:AUS,EUR,JAP	DEP 25-35 KW, EUR-BRA-JAP-AUS
22	77350388B	SCREW TCEIR M5X10	2	23/04/2010		DFR:N;MOD:M796 ABS;XST:AUS,EUR,JAP	
23	67210231A	CAP, BATTERY PLUS TERMINAL	1			MOD:M796 ABS;XST:AUS,EUR,JAP	
24	85350101A	WASHER, SPRING	2	23/02/2012		DFR:N;MOD:M796 ABS;XST:AUS,EUR,JAP	
25	75050051A	NUT 6MM	2	23/02/2012		DFR:N;MOD:M796 ABS;XST:AUS,EUR,JAP	
26	67210241A	COVER, LEAD WIRE	1	23/02/2012		DFR:N;MOD:M796 ABS;XST:AUS,EUR,JAP	

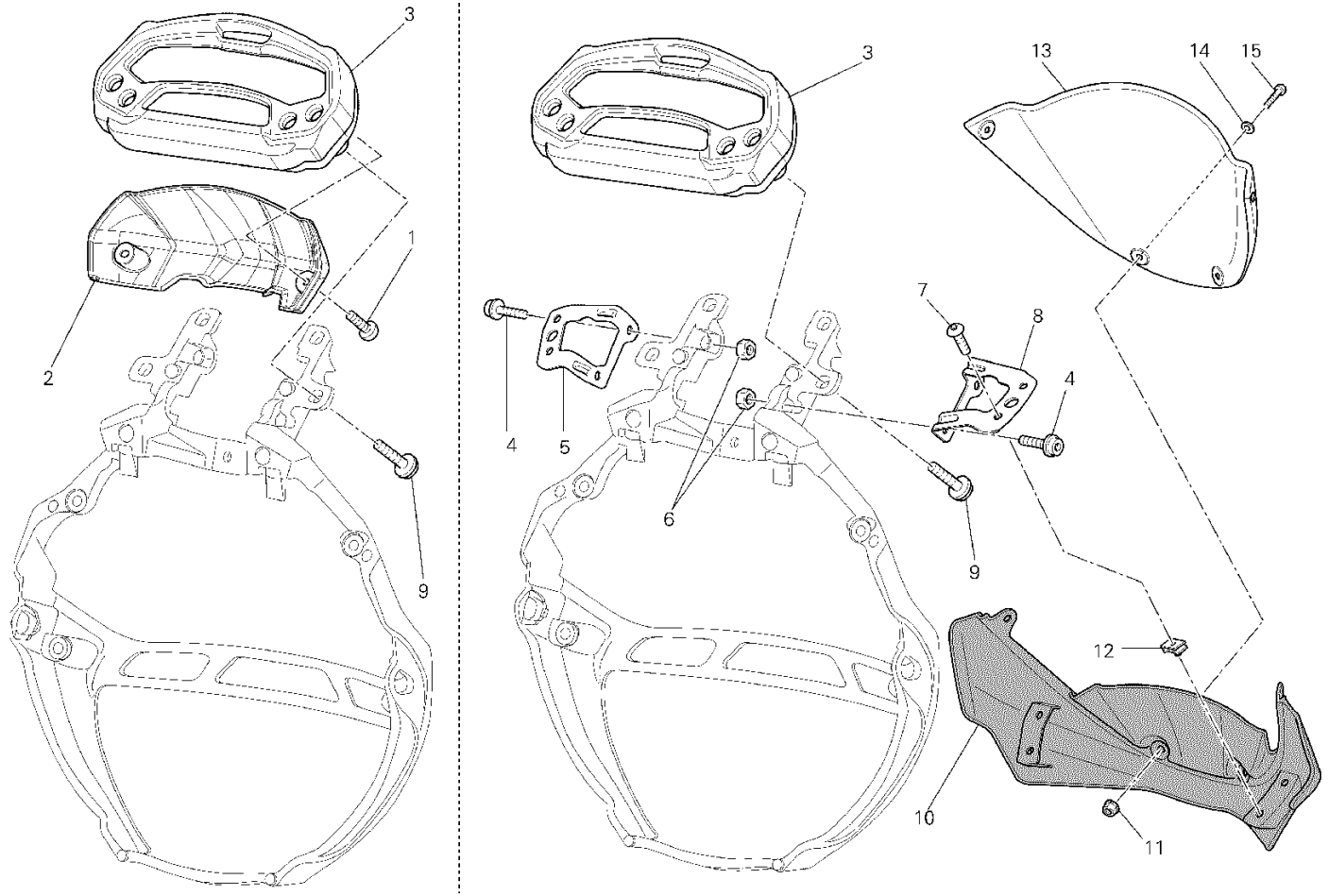

FAN00193

POS.	CODE	DESCRIPTION	QTY	START DATE	END DATE	VALIDITY	NOTES
1	77550013C	SCREW TBEI M4X12	2	23/02/2012		DFR:N;MOD:M796 ABS;XST:AUS,EUR,JAP	
2	24713231A	COVER, METER	1	23/02/2012		DFR:N;MOD:M796 ABS;XST:AUS,EUR,JAP	
3	40610792A	METER	1	23/02/2012		DFR:N;MOD:M796 ABS;XST:AUS,EUR,JAP	
4	77156658B	SCREW TCEIF M6X16	4	23/02/2012		DFR:N;MOD:M796 ABS;XST:AUS,EUR,JAP	
5	82919711A	LEFT BRACKET	1	23/02/2012		DFR:N;MOD:M796 ABS;XST:AUS,EUR,JAP	
6	74940041A	NUT, SELF-LOCKING M6	4	23/02/2012		DFR:N;MOD:M796 ABS;XST:AUS,EUR,JAP	
7	77550251B	SCREW	4	23/02/2012		DFR:N;MOD:M796 ABS;XST:AUS,EUR,JAP	
8	82919681A	RIGHT BRACKET	1	23/02/2012		DFR:N;MOD:M796 ABS;XST:AUS,EUR,JAP	
9	77440101A	SCREW, TAPPING 3.5X10	4	23/02/2012		DFR:N;MOD:M796 ABS;XST:AUS,EUR,JAP	
10	48110261BT	COWLING	1	23/02/2012		DFR:N;MOD:M796 ABS;XCO:MTBS;XST:AUS,EUR,JAP	
	48110261BW	COWLING	1	23/02/2012		DFR:N;MOD:M796 ABS;XCO:AWS;XST:AUS,EUR,JAP	
11	75010281A	NUT, SPRING	4	23/02/2012		DFR:N;MOD:M796 ABS;XST:AUS,EUR,JAP	
12	85040471A	QUICK FASTENING M5	4	01/03/2012		DFR:N;MOD:M796 ABS;XST:AUS,EUR,JAP	
13	48710261B	WINDSHIELD	1	23/02/2012		DFR:N;MOD:M796 ABS;XST:AUS,EUR,JAP	
14	85210241A	WASHER, NYLON 4X8X0.5	4	23/02/2012		DFR:N;MOD:M796 ABS;XST:AUS,EUR,JAP	
15	77510071AB	SCREW, SPECIAL	4	23/02/2012		DFR:N;MOD:M796 ABS;XST:AUS,EUR,JAP	

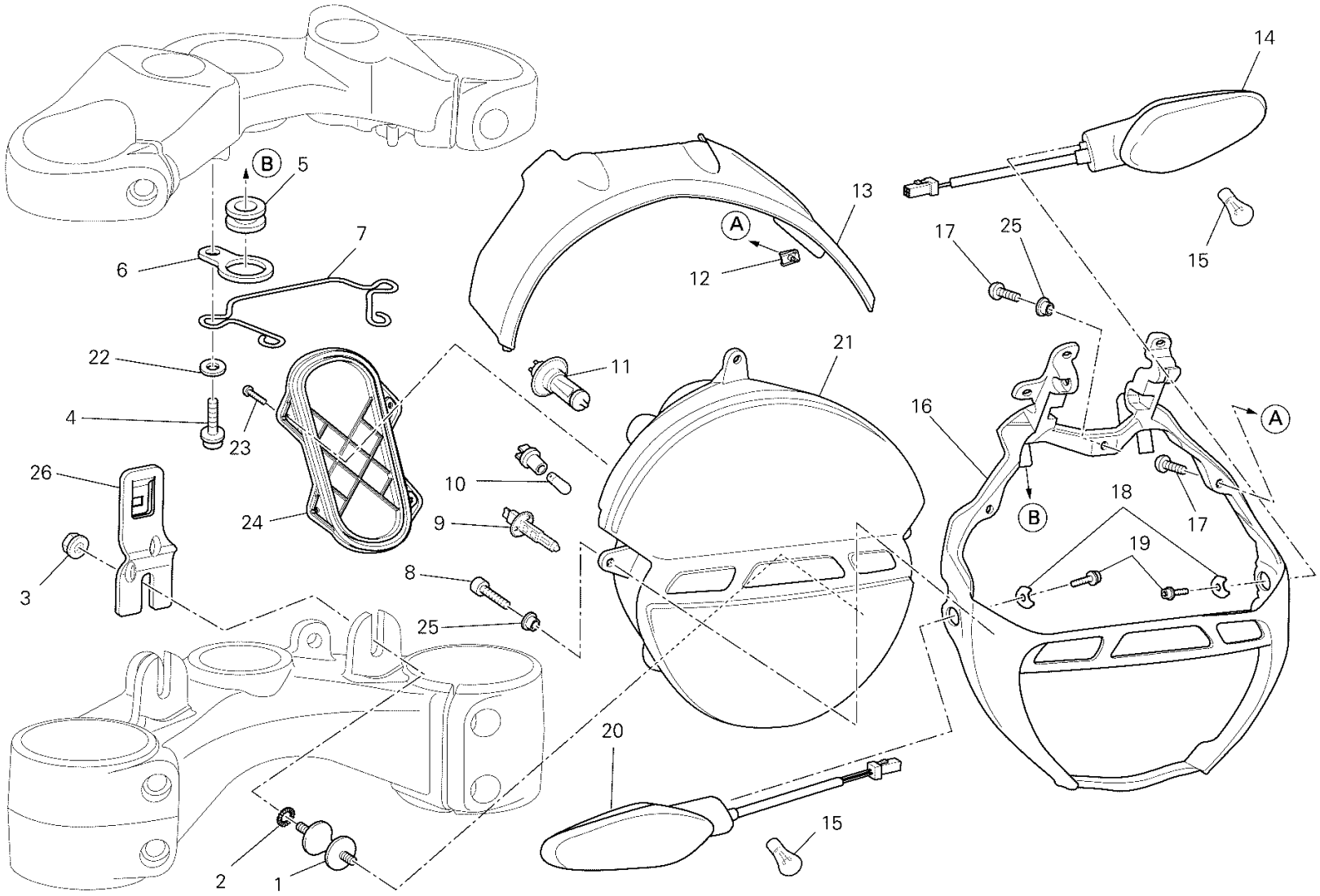
14
B
5
13
A
12
7
6
17
25
15
22
11
21
4
23
16
A
26
10
18
B
17
24
9
19
3
8
25
20
15
2
1

FAN00194

DRAWING 022 - HEADLIGHT [MOD:M796 ABS;XST:AUS,EUR,JAP]

GROUP ELECTRIC

POS.	CODE	DESCRIPTION	QTY	START DATE	END DATE	VALIDITY	NOTES
1	70010481B	DAMPER M6X12	2	01/02/2012		DFR:N;MOD:M796 ABS;XST:AUS,EUR,JAP	
2	85550001B	ALUMINIUM GASKET	2	23/02/2012		MOD:M796 ABS;XST:AUS,EUR,JAP	
3	75050011B	NUT 6MM	2	23/02/2012		DFR:N;MOD:M796 ABS;XST:AUS,EUR,JAP	
4	77110391A	SCREW TCEIF M6X16	2	22/02/2012		DFR:N;MOD:M796 ABS;XST:AUS,EUR,JAP	
5	76410641A	VIBRATION DAMPER PAD	2	22/02/2012		DFR:N;MOD:M796 ABS;XST:AUS,EUR,JAP	
6	83013641A	STAY, HEADLIGHT	2	22/02/2012		DFR:N;MOD:M796 ABS;XST:AUS,EUR,JAP	
7	75810461A	FAIRLEAD	1	22/02/2012		DFR:N;MOD:M796 ABS;XST:AUS,EUR,JAP	
8	77110441A	SCREW TCEIF M5X16	2	01/02/2012		DFR:N;MOD:M796 ABS;XST:AUS,EUR,JAP	
9	39040281A	BULB 12V-55W H1	1			MOD:M796 ABS;XST:AUS,EUR,JAP	
10	39040191A	BULB 12V 6W	1			MOD:M796 ABS;XST:AUS,EUR,JAP	
11	39040111A	BULB 12V, 55W	1			MOD:M796 ABS;XST:AUS,EUR,JAP	
12	85041951AA	QUICK FASTENING	3	28/11/2012		MOD:M796 ABS;XST:AUS,EUR,JAP	
13	24713221A	COVER, HEADLAMP	1	01/02/2012		DFR:N;MOD:M796 ABS;XST:AUS,EUR,JAP	
14	53010225A	FLASHER LIGHT FRONT LH - REAR RH	1	01/03/2012		DFR:N;MOD:M796 ABS;XST:AUS,EUR,JAP	
15	39040211A	BULB	2	12/03/2012		DFR:N;MOD:M796 ABS;XST:AUS,EUR,JAP	
16	82919673A	BRACKET, HEADLIGHT	1	23/02/2012		DFR:N;MOD:M796 ABS;XST:AUS,EUR,JAP	
17	77510111B	SCREW TBEI M5X20	3	01/02/2012		DFR:N;MOD:M796 ABS;XST:AUS,EUR,JAP	
18	82714931A	PLATE	2	01/02/2012		DFR:N;MOD:M796 ABS;XST:AUS,EUR,JAP	
19	77156378B	SCREW TCEIF M5X8	2	01/02/2012		DFR:N;MOD:M796 ABS;XST:AUS,EUR,JAP	
20	53010235A	FLASHER LIGHT FRONT RH- REAR LH	1	01/02/2012		DFR:N;MOD:M796 ABS;XST:AUS,EUR,JAP	

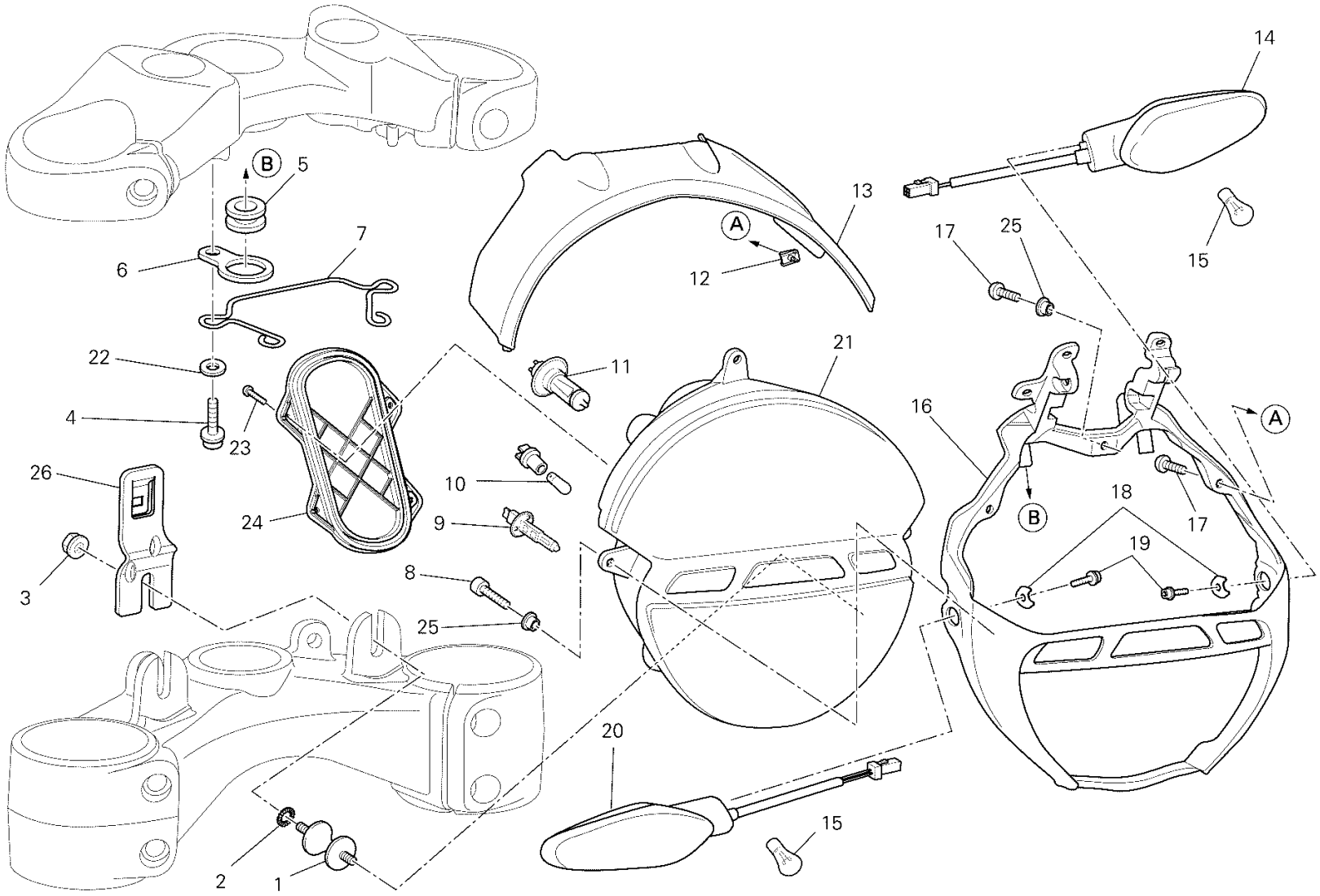
14
B
5
13
A
12
7
6
17
25
15
22
11
21
4
23
16
A
26
10
18
B
17
24
9
19
3
8
25
20
15
2
1

FAN00194

DRAWING 022 - HEADLIGHT [MOD:M796 ABS;XST:AUS,EUR,JAP]

GROUP ELECTRIC

POS.	CODE	DESCRIPTION	QTY	START DATE	END DATE	VALIDITY	NOTES
21	52010172B	HEADLIGHT	1	01/02/2012		DFR:N;MOD:M796 ABS;XST:AUS,EUR,JAP	
22	85211761A	WASHER 6.4X12.5X1.6	2	22/02/2012		DFR:N;MOD:M796 ABS;XST:AUS,EUR,JAP	
23	77112351A	SCREW	4			MOD:M796 ABS;XST:AUS,EUR,JAP	
24	24713411A	COVER, HEADLAMP	1			MOD:M796 ABS;XST:AUS,EUR,JAP	
25	71614061A	SPACER 5X8X6.8	3	01/02/2012		DFR:N;MOD:M796 ABS;XST:AUS,EUR,JAP	
26	82919761B	HOLDER	1	23/02/2012		DFR:N;MOD:M796 ABS;XST:AUS,EUR,JAP	

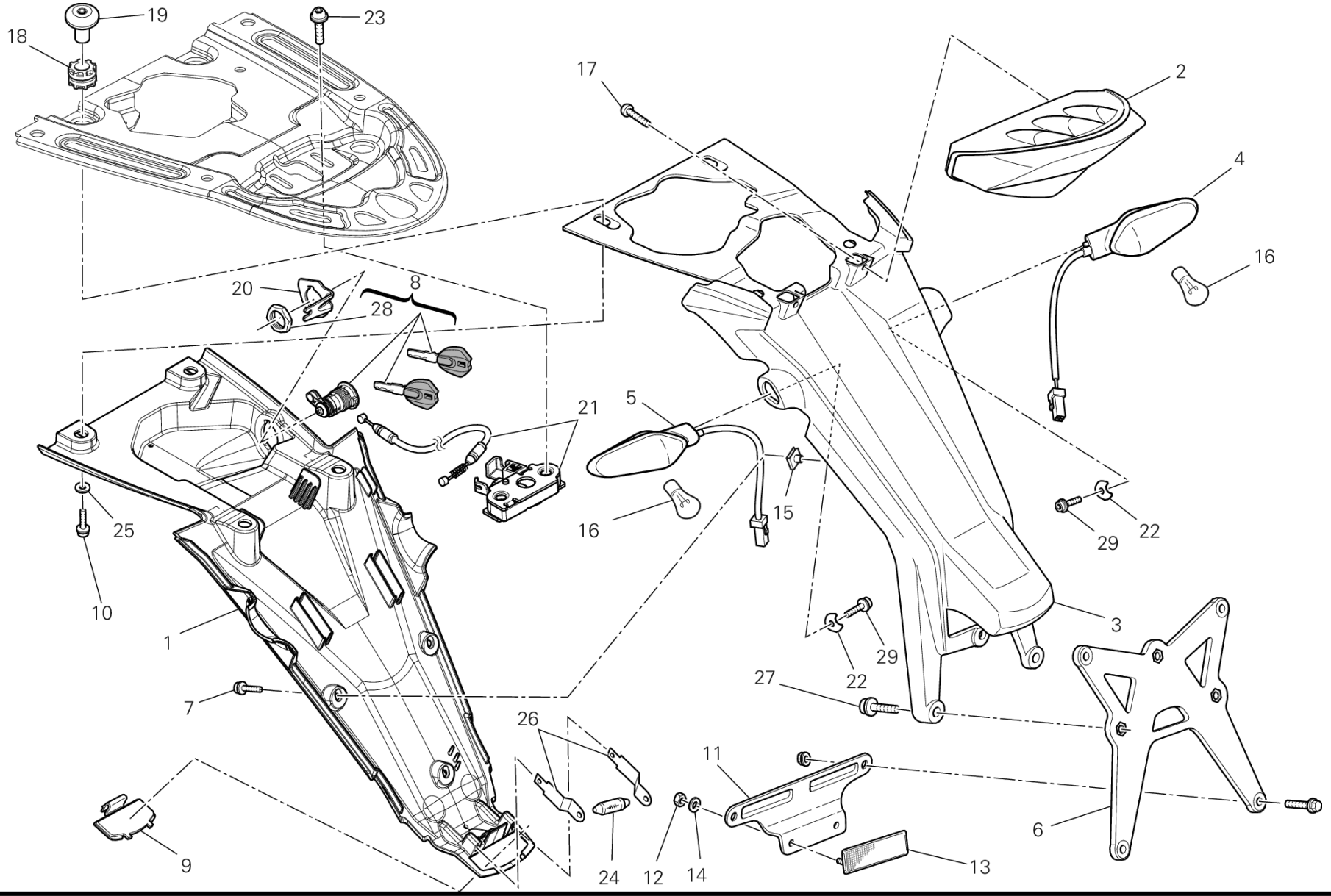
19
23
18
17
2
4
16
20
8
28
21
5
15
16
25
10
1
7
29
22
3
29
22
27
26
11
6
9
24
12
14
13

POS.	CODE	DESCRIPTION	QTY	START DATE	END DATE	VALIDITY	NOTES
1	24712242A	MUDFLAP	1	01/03/2012		DFR:N;MOD:M796 ABS;XST:AUS,EUR,JAP	
2	52510342A	TAILLIGHT	1	23/02/2012		DFR:N;MOD:M796 ABS;XST:AUS,EUR,JAP	
3	56110281A	NUMBER PLATE HOLDER	1	01/03/2012		DFR:N;MOD:M796 ABS;XST:AUS,EUR,JAP	
4	53010225A	FLASHER LIGHT FRONT LH - REAR RH	1	23/02/2012		DFR:N;MOD:M796 ABS;XST:AUS,EUR,JAP	
5	53010235A	FLASHER LIGHT FRONT RH- REAR LH	1	23/02/2012		DFR:N;MOD:M796 ABS;XST:AUS,EUR,JAP	
6	56110441A	NUMBER PLATE HOLDER	1	23/02/2012		DFR:N;MOD:M796 ABS;XST:AUS,EUR,JAP	
7	77156398B	SCREW TCEIF M5X12	3	23/02/2012		DFR:N;MOD:M796 ABS;XST:AUS,EUR,JAP	
8	59820611A	SEAT LOCK	1	07/06/2011		DFR:N;MOD:M796 ABS;XST:AUS,EUR,JAP	
9	24713331A	LENS, LICENCE LIGHT	1	23/02/2012		DFR:N;MOD:M796 ABS;XST:AUS,EUR,JAP	
10	77156628B	SCREW TCEIF M6X10	4	23/02/2012		DFR:N;MOD:M796 ABS;XST:AUS,EUR,JAP	
11	82712981B	BRACKET, REFLECTOR	1	23/02/2012		DFR:N;MOD:M796 ABS;XST:AUS,EUR,JAP	
12	74950011B	NUT, SPRING	2	23/02/2012		DFR:N;MOD:M796 ABS;XST:AUS,EUR,JAP	
13	52910061B	REFLEX REFLECTOR, REAR	1	23/02/2012		DFR:N;MOD:M796 ABS;XST:AUS,EUR,JAP	
14	85250011C	WASHER 4.3X9X0.8	2	23/02/2012		DFR:N;MOD:M796 ABS;XST:AUS,EUR,JAP	
15	85040471A	QUICK FASTENING M5	3	23/02/2012		DFR:N;MOD:M796 ABS;XST:AUS,EUR,JAP	
16	39040211A	BULB	2	24/12/2009		DFR:N;MOD:M796 ABS;XST:AUS,EUR,JAP	
17	77440041A	SCREW, TAPPING M5X16	2	23/02/2012		DFR:N;MOD:M796 ABS;XST:AUS,EUR,JAP	

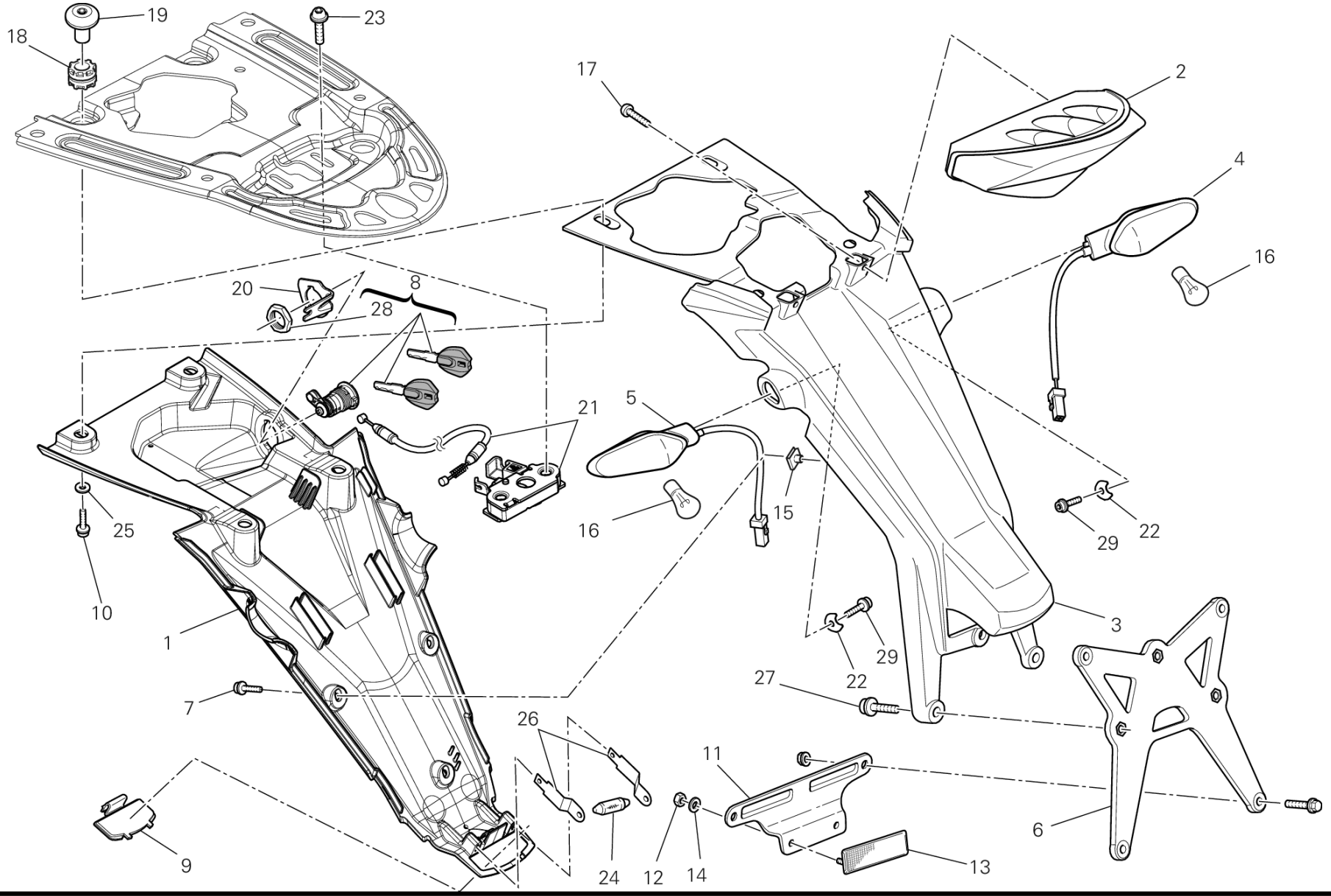
19
23
18
17
2
4
16
20
8
28
21
5
15
16
25
10
1
7
29
22
3
29
22
27
26
11
6
9
24
12
14
13

POS.	CODE	DESCRIPTION	QTY	START DATE	END DATE	VALIDITY	NOTES
18	76410241A	VIBRATION DAMPER PAD	4	23/02/2012		DFR:N;MOD:M796 ABS;XST:AUS,EUR,JAP	
19	77915601A	SCREW, SPECIAL	4	23/02/2012		DFR:N;MOD:M796 ABS;XST:AUS,EUR,JAP	
20	82714821A	PLATE	1	23/02/2012		DFR:N;MOD:M796 ABS;XST:AUS,EUR,JAP	
21	59810121A	LOCK LATCH	1	23/02/2012		DFR:N;MOD:M796 ABS;XST:AUS,EUR,JAP	
22	82714931A	PLATE	2	23/02/2012		DFR:N;MOD:M796 ABS;XST:AUS,EUR,JAP	
23	77915551A	SCREW TBEIF M6X20	2	01/03/2012		DFR:N;MOD:M796 ABS;XST:AUS,EUR,JAP	
24	39040162A	BULB 12V-5W C5W	1	23/02/2012		DFR:N;MOD:M796 ABS;XST:AUS,EUR,JAP	
25	85211601B	WASHER 6.4X14X1.2	4	23/02/2012		DFR:N;MOD:M796 ABS;XST:AUS,EUR,JAP	
26	39110031A	BLADE	2	23/02/2012		DFR:N;MOD:M796 ABS;XST:AUS,EUR,JAP	
27	77113691A	SCREW TCEIF M6X12	3	23/02/2012		DFR:N;MOD:M796 ABS;XST:AUS,EUR,JAP	
28	75011551A	NUT M22X1.5	1	23/02/2012		DFR:N;MOD:M796 ABS;XST:AUS,EUR,JAP	
29	77156378B	SCREW TCEIF M5X8	2	23/02/2012		DFR:N;MOD:M796 ABS;XST:AUS,EUR,JAP	

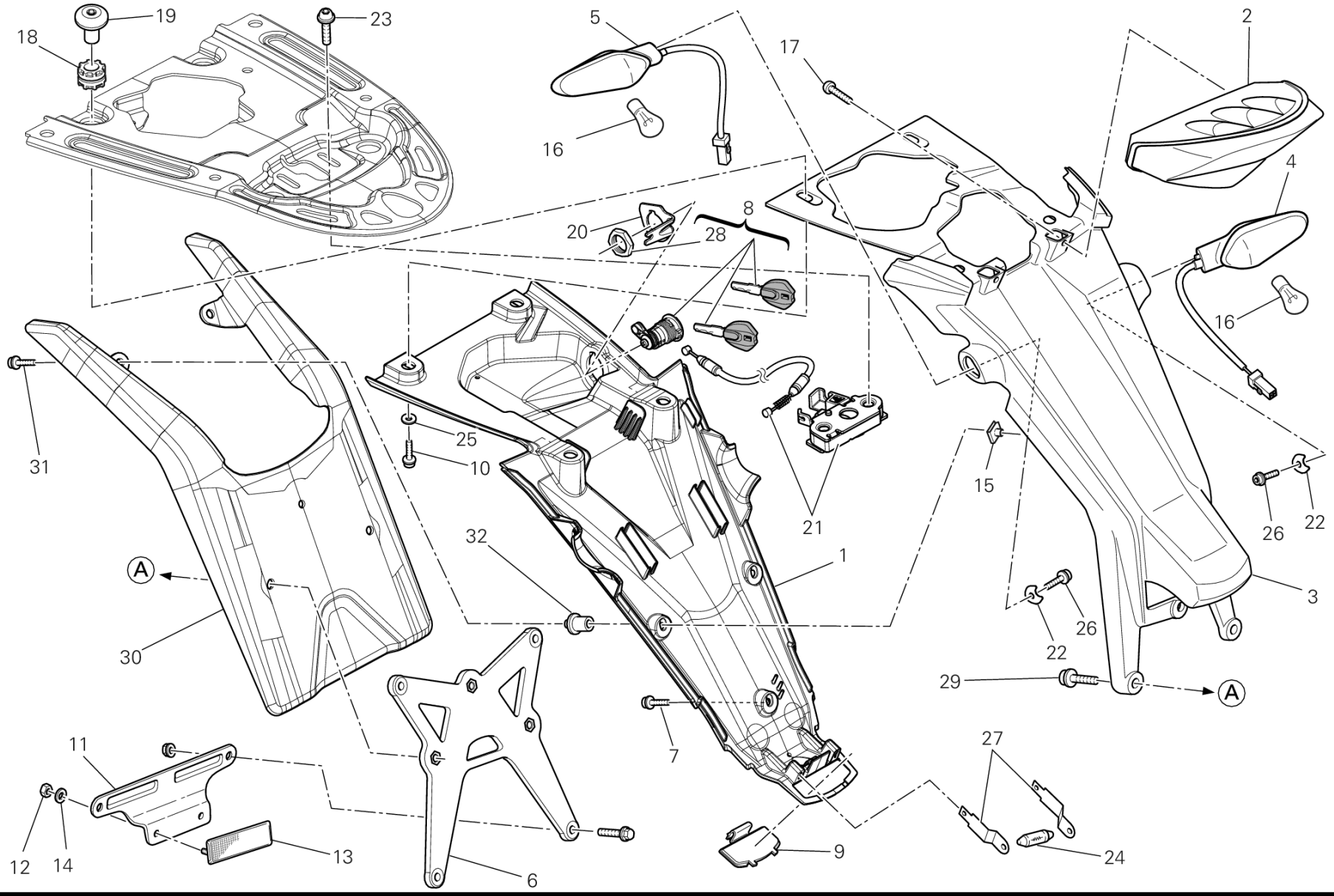
19
18
23
5
16
17
2
4
20
8
28
16
31
25
10
15
21
26
22
32
1
3
A
30
22
26
29
A
11
7
27
12
14
13
6
9
24

POS.	CODE	DESCRIPTION	QTY	START DATE	END DATE	VALIDITY	NOTES
1	24712242A	MUDFLAP	1	01/03/2012		DFR:N;MOD:M796 ABS;XST:AUS,EUR,JAP	
2	52510342A	TAILLIGHT	1	23/02/2012		DFR:N;MOD:M796 ABS;XST:AUS,EUR,JAP	
3	56110281A	NUMBER PLATE HOLDER	1	01/03/2012		DFR:N;MOD:M796 ABS;XST:AUS,EUR,JAP	
4	53010225A	FLASHER LIGHT FRONT LH - REAR RH	1	23/02/2012		DFR:N;MOD:M796 ABS;XST:AUS,EUR,JAP	
5	53010235A	FLASHER LIGHT FRONT RH- REAR LH	1	23/02/2012		DFR:N;MOD:M796 ABS;XST:AUS,EUR,JAP	
6	56110441A	NUMBER PLATE HOLDER	1	23/02/2012		DFR:N;MOD:M796 ABS;XST:AUS,EUR,JAP	
7	77156398B	SCREW TCEIF M5X12	1	23/02/2012		DFR:N;MOD:M796 ABS;XST:AUS,EUR,JAP	
8	59820611A	SEAT LOCK	1	07/06/2011		DFR:N;MOD:M796 ABS;XST:AUS,EUR,JAP	
9	24713331A	LENS, LICENCE LIGHT	1	23/02/2012		DFR:N;MOD:M796 ABS;XST:AUS,EUR,JAP	
10	77156628B	SCREW TCEIF M6X10	4	23/02/2012		DFR:N;MOD:M796 ABS;XST:AUS,EUR,JAP	
11	82712981B	BRACKET, REFLECTOR	1	23/02/2012		DFR:N;MOD:M796 ABS;XST:AUS,EUR,JAP	
12	74950011B	NUT, SPRING	2	23/02/2012		DFR:N;MOD:M796 ABS;XST:AUS,EUR,JAP	
13	52910061B	REFLEX REFLECTOR, REAR	1	23/02/2012		DFR:N;MOD:M796 ABS;XST:AUS,EUR,JAP	
14	85250011C	WASHER 4.3X9X0.8	2	23/02/2012		DFR:N;MOD:M796 ABS;XST:AUS,EUR,JAP	
15	85040471A	QUICK FASTENING M5	3	23/02/2012		DFR:N;MOD:M796 ABS;XST:AUS,EUR,JAP	
16	39040211A	BULB	2	12/03/2012		DFR:N;MOD:M796 ABS;XST:AUS,EUR,JAP	
17	77440041A	SCREW, TAPPING M5X16	2	23/02/2012		DFR:N;MOD:M796 ABS;XST:AUS,EUR,JAP	

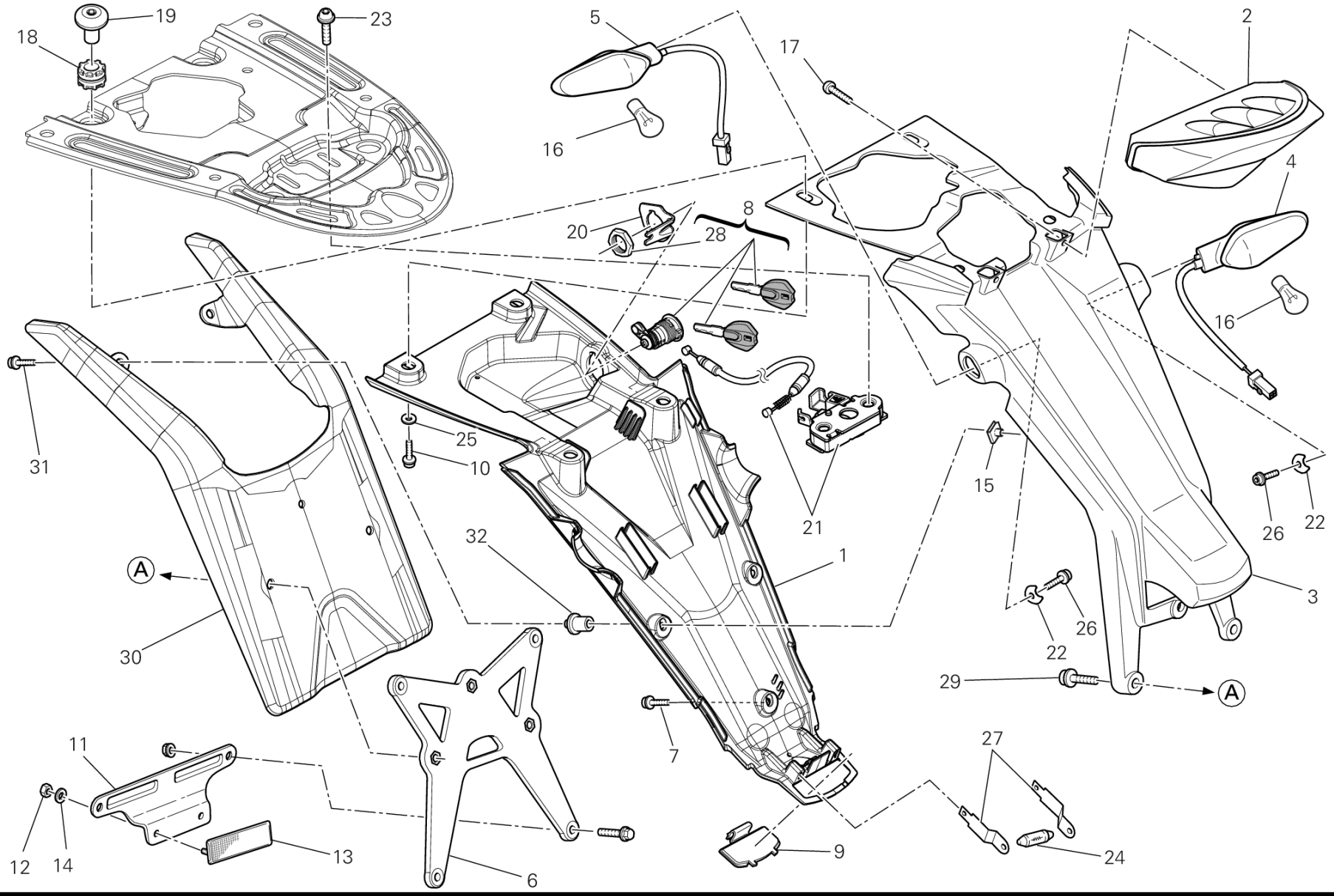
19
18
23
5
16
17
2
4
20
8
28
16
31
25
10
15
26
22
21
32
1
3
A
30
22
26
29
A
11
7
27
12
14
13
6
9
24

POS.	CODE	DESCRIPTION	QTY	START DATE	END DATE	VALIDITY	NOTES
18	76410241A	VIBRATION DAMPER PAD	4	23/02/2012		DFR:N;MOD:M796 ABS;XST:AUS,EUR,JAP	
19	77915601A	SCREW, SPECIAL	4	23/02/2012		DFR:N;MOD:M796 ABS;XST:AUS,EUR,JAP	
20	82714821A	PLATE	1	23/02/2012		DFR:N;MOD:M796 ABS;XST:AUS,EUR,JAP	
21	59810121A	LOCK LATCH	1	23/02/2012		DFR:N;MOD:M796 ABS;XST:AUS,EUR,JAP	
22	82714931A	PLATE	2	01/03/2012		DFR:N;MOD:M796 ABS;XST:AUS,EUR,JAP	
23	77915551A	SCREW TBEIF M6X20	2	01/03/2012		DFR:N;MOD:M796 ABS;XST:AUS,EUR,JAP	
24	39040162A	BULB 12V-5W C5W	1	23/02/2012		DFR:N;MOD:M796 ABS;XST:AUS,EUR,JAP	
25	85211601B	WASHER 6.4X14X1.2	4	23/02/2012		DFR:N;MOD:M796 ABS;XST:AUS,EUR,JAP	
26	77156378B	SCREW TCEIF M5X8	2	23/02/2012		DFR:N;MOD:M796 ABS;XST:AUS,EUR,JAP	
27	39110031A	BLADE	2	23/02/2012		DFR:N;MOD:M796 ABS;XST:AUS,EUR,JAP	
28	75011551A	NUT M22X1.5	1	23/02/2012		DFR:N;MOD:M796 ABS;XST:AUS,EUR,JAP	
29	77116648B	SCREW	3	23/02/2012		DFR:N;MOD:M796 ABS;XST:AUS,EUR,JAP	
30	46013421A	MUDFLAP	1	23/02/2012		DFR:N;MOD:M796 ABS;XST:AUS,EUR,JAP	
31	77354763B	SCREW TCEIR M5X30	2	23/02/2012		DFR:N;MOD:M796 ABS;XST:AUS,EUR,JAP	
32	71314431A	SPACER	2	23/02/2012		DFR:N;MOD:M796 ABS;XST:AUS,EUR,JAP	

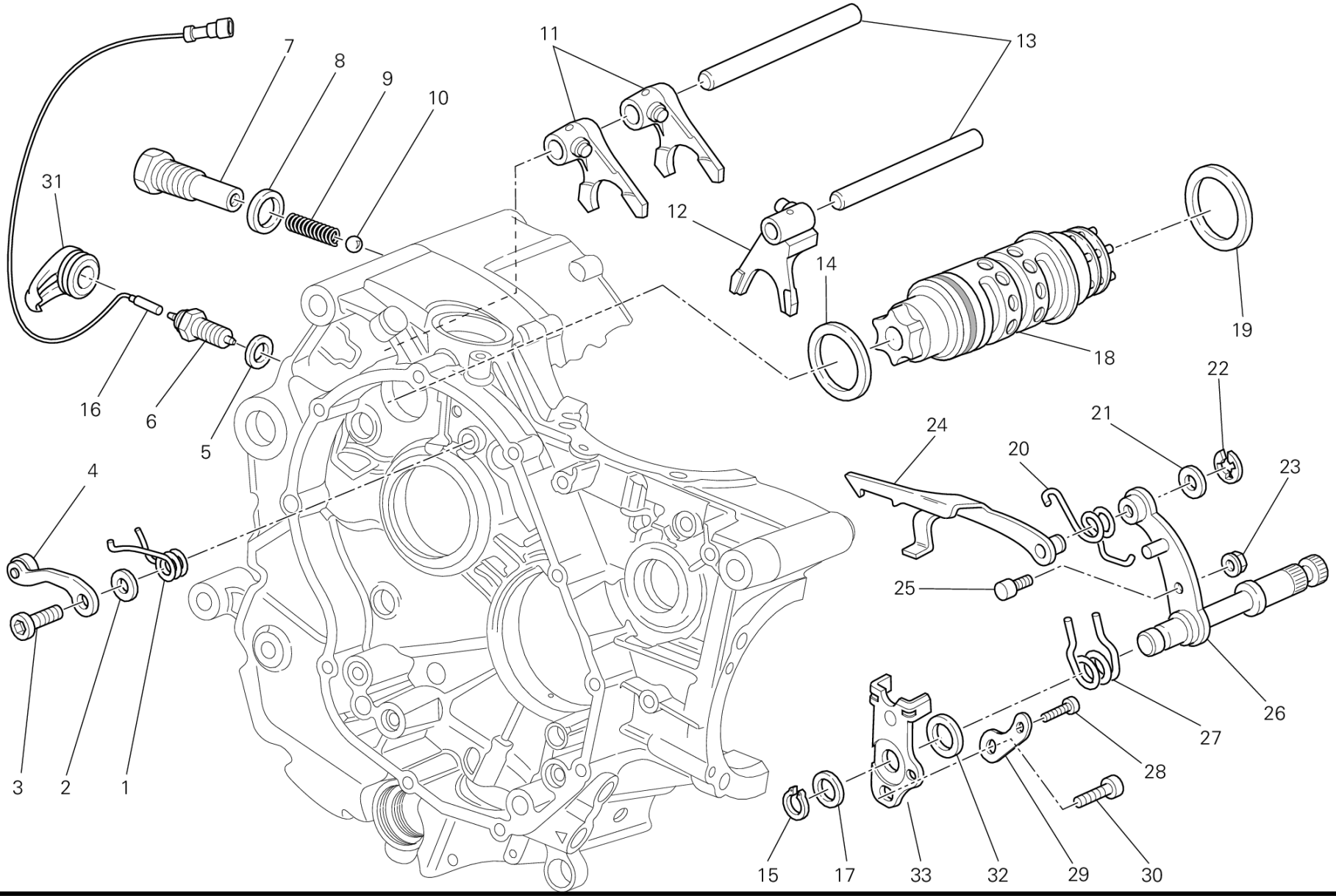
1
2
3
4
5
6
7
8
9
10
11
12
13
14
15
16
17
18
19
20
21
22
23
24
25
26
27
28
29
30
31
32
33

POS.	CODE	DESCRIPTION	QTY	START DATE	END DATE	VALIDITY	NOTES
1	79910491A	SPRING, RETURN	1	22/12/2011		MOD:M796 ABS;XST:AUS,EUR,JAP	
2	85210532A	WASHER 8.2X20X1	1	22/12/2011		MOD:M796 ABS;XST:AUS,EUR,JAP	
3	77910391A	SCREW M8X21.5	1	22/12/2011		MOD:M796 ABS;XST:AUS,EUR,JAP	
4	45520181A	GEAR FIXING CLICK ASSEMBLY	1	22/12/2011		MOD:M796 ABS;XST:AUS,EUR,JAP	
5	85250241A	WASHER 10X14X1	1	15/03/2012		MOD:M796 ABS;XST:AUS,EUR,JAP	
6	53910211B	NEUTRAL SWITCH ASSY	1	15/03/2012		MOD:M796 ABS;XST:AUS,EUR,JAP	
7	77912033A	SCREW M16X1.5	1	15/03/2012		MOD:M796 ABS;XST:AUS,EUR,JAP	
8	027291090	GASKET 16.2X24X2	1	15/03/2012		MOD:M796 ABS;XST:AUS,EUR,JAP	
9	066013143	GEAR SELECTOR SPRING	1	15/03/2012		MOD:M796 ABS;XST:AUS,EUR,JAP	
10	768351134	BALL 11MM	1	15/03/2012		MOD:M796 ABS;XST:AUS,EUR,JAP	
11	180Z0011A	1ST,4TH-2ND,3RD GEAR SELECTOR FORK	2	27/02/2012		DFR:N;MOD:M796 ABS;XST:AUS,EUR,JAP	
12	180Z0021A	5TH,6TH GEAR SELECTOR FORK	1	27/02/2012		DFR:N;MOD:M796 ABS;XST:AUS,EUR,JAP	
13	82113881A	FORK PIN	2	15/03/2012		MOD:M796 ABS;XST:AUS,EUR,JAP	
14	85210051A	THRUST WASHER 1 MM	1	15/03/2012		MOD:M796 ABS;XST:AUS,EUR,JAP	
15	735001542	CIRCLIP 15 DIN 471	1	24/12/2009		MOD:M796 ABS;XST:AUS,EUR,JAP	
16	51016581A	CABLE, NEUTRAL SWITCH	1	23/02/2012		MOD:M796 ABS;XST:AUS,EUR,JAP	
17	040029125	THRUST WASHER 15.5X22X0.2	2	24/12/2009		MOD:M796 ABS;XST:AUS,EUR,JAP	
	040029126	THRUST WASHER 15.5X22X0.5	1	24/12/2009		MOD:M796 ABS;XST:AUS,EUR,JAP	
18	182Z0042A	COMPLETE GEARBOX DRUM	1	15/03/2012		MOD:M796 ABS;XST:AUS,EUR,JAP	
19	85210941A	THRUST WASHER 45.2X49X0.9	1	15/03/2012		MOD:M796 ABS;XST:AUS,EUR,JAP	
20	79914821A	RETURN SPRING	1	24/12/2009		MOD:M796 ABS;XST:AUS,EUR,JAP	
21	040009050	THRUST WASHER 10.5X16X0.5	1	24/12/2009		MOD:M796 ABS;XST:AUS,EUR,JAP	
	076592205	THRUST WASHER 10.5X15X0.2	2	24/12/2009		MOD:M796 ABS;XST:AUS,EUR,JAP	
22	88450341B	SPRING RING	1			MOD:M796 ABS;XST:AUS,EUR,JAP	
23	74810401A	NUT, FLANGE	1	24/12/2009		MOD:M796 ABS;XST:AUS,EUR,JAP	
24	18010081A	CONTROL FORK	1	24/12/2009		MOD:M796 ABS;XST:AUS,EUR,JAP	
25	066013165	GEARCHANGE LEVER PIN	1	24/12/2009		MOD:M796 ABS;XST:AUS,EUR,JAP	
26	82110011A	GEAR SELECTOR SHAFT	1	24/12/2009		MOD:M796 ABS;XST:AUS,EUR,JAP	
27	079913110	SPRING, SHIFT RETURN	1	24/12/2009		MOD:M796 ABS;XST:AUS,EUR,JAP	
28	77150670Z	SCREW TCEI M6X20	1	15/03/2012		MOD:M796 ABS;XST:AUS,EUR,JAP	
29	71319151A	SPACER	1	15/03/2012		MOD:M796 ABS;XST:AUS,EUR,JAP	
30	77151250Z	SCREW TCEI M8X25	1	15/03/2012		MOD:M796 ABS;XST:AUS,EUR,JAP	
31	75810451A	HOLDER, WIRE	1	23/02/2012		MOD:M796 ABS;XST:AUS,EUR,JAP	

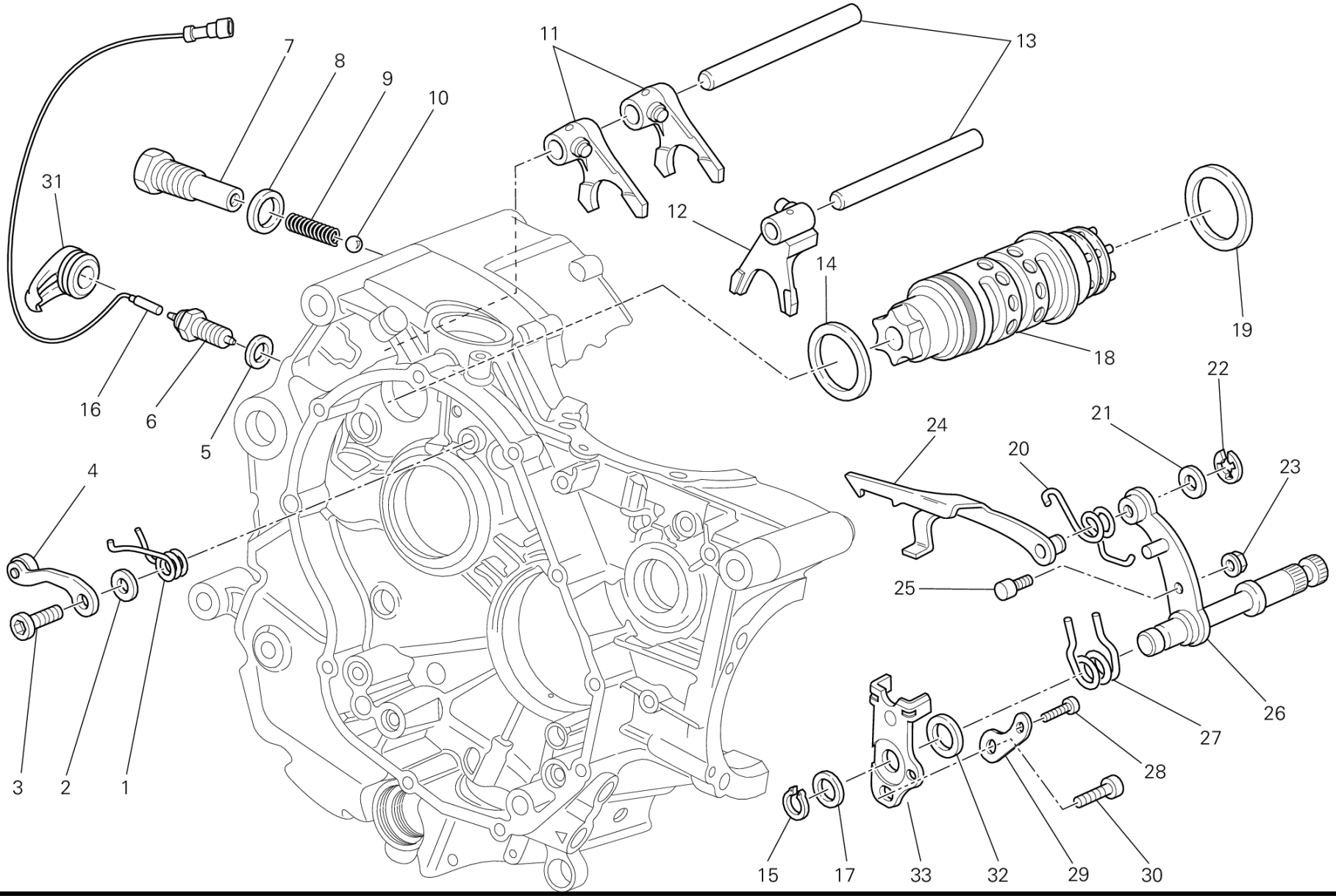
1
2
3
4
5
6
7
8
9
10
11
12
13
14
15
16
17
18
19
20
21
22
23
24
25
26
27
28
29
30
31
32
33

POS.	CODE	DESCRIPTION	QTY	START DATE	END DATE	VALIDITY	NOTES
32	88110121A	CENTERING RING	1	24/12/2009		MOD:M796 ABS;XST:AUS,EUR,JAP	
33	82610292A	STOPPER PLATE	1	24/12/2009		MOD:M796 ABS;XST:AUS,EUR,JAP	

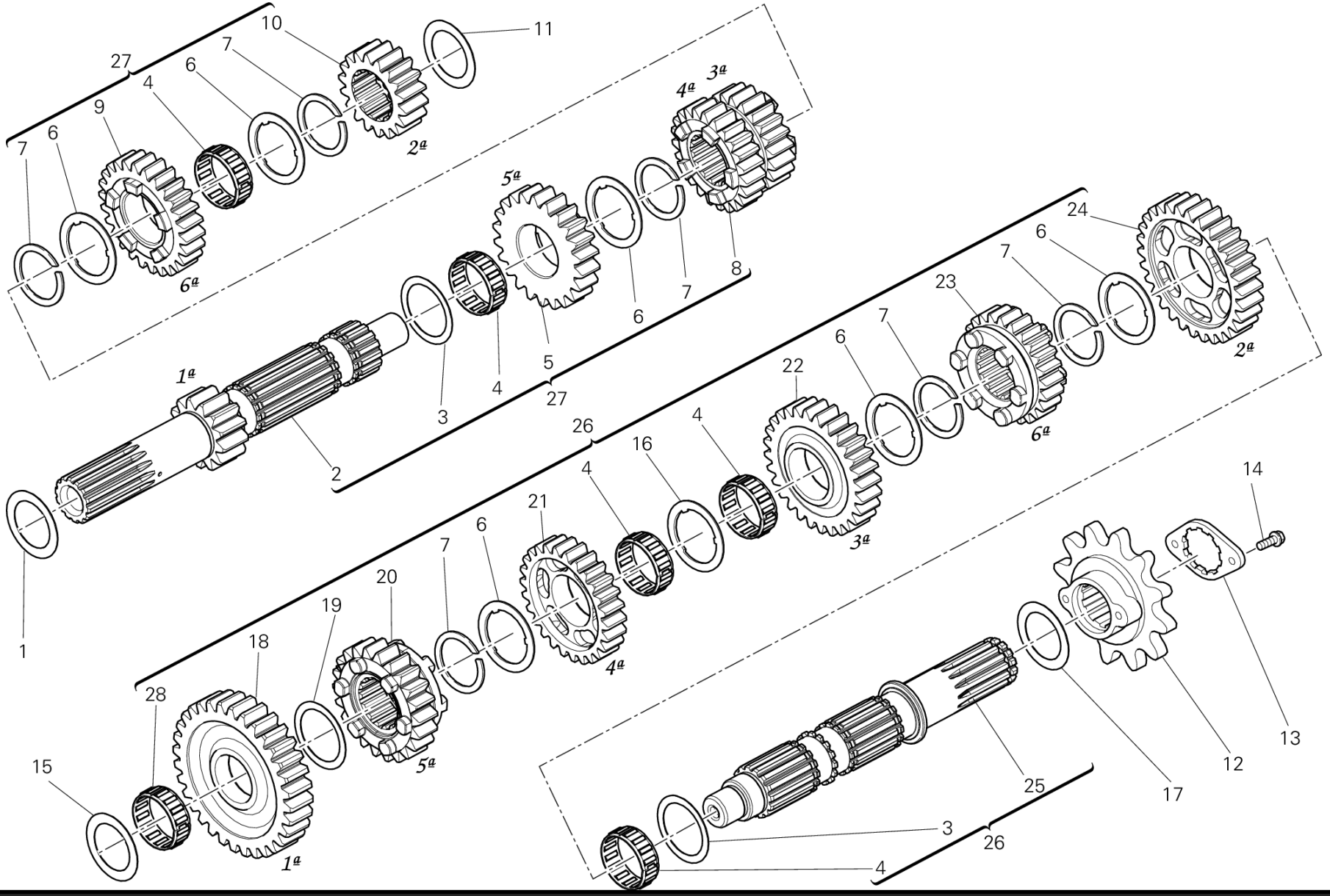
1ª
2ª
3ª
4ª
5ª
6ª
1
2
3
4
5
6
7
8
9
10
11
12
13
14
15
16
17
18
19
20
21
22
23
24
25
26
27
28

POS.	CODE	DESCRIPTION	QTY	START DATE	END DATE	VALIDITY	NOTES
1	025147054	THRUST WASHER 25.2X32.5X1.2	1	22/02/2012		DFR:N;MOD:M796 ABS;XST:AUS,EUR,JAP	
2	14910331A	MAIN SHAFT 13T	1	24/12/2009		DFR:N;MOD:M796 ABS;XST:AUS,EUR,JAP	
3	067016150	THRUST WASHER 0.5 MM	2	24/12/2009		DFR:N;MOD:M796 ABS;XST:AUS,EUR,JAP	
4	70140051A	BEARING, NEEDLE	5	24/12/2009		DFR:N;MOD:M796 ABS;XST:AUS,EUR,JAP	
5	17211101A	DRIVING GEAR 5TH SPEED	1	24/12/2009		DFR:N;MOD:M796 ABS;XST:AUS,EUR,JAP	
6	85610011A	THRUST WASHER 0.5 MM	6	24/12/2009		DFR:N;MOD:M796 ABS;XST:AUS,EUR,JAP	
7	067016145	SPRING RING	6	24/12/2009		DFR:N;MOD:M796 ABS;XST:AUS,EUR,JAP	
8	17211091A	GEAR, 3RD PINION 21/23T	1	24/12/2009		DFR:N;MOD:M796 ABS;XST:AUS,EUR,JAP	
9	17211111A	GEAR, 6TH DRIVE NT:26	1	24/12/2009		DFR:N;MOD:M796 ABS;XST:AUS,EUR,JAP	
10	17211081A	DRIVING GEAR 2ND SPEED	1	24/12/2009		DFR:N;MOD:M796 ABS;XST:AUS,EUR,JAP	
11	71310141E	THRUST WASHER 20.3X32X1.6	1	22/02/2012		DFR:N;MOD:M796 ABS;XST:AUS,EUR,JAP	
12	44910591A	SPROCKET T15	1	23/02/2012		DFR:N;MOD:M796 ABS;XST:AUS,EUR,JAP	
13	82610111A	PLATE, DRIVE SPROCKET FIXING	1	23/02/2012		DFR:N;MOD:M796 ABS;XST:AUS,EUR,JAP	
14	77210621A	SCREW TEF M5X16	2	23/02/2012		DFR:N;MOD:M796 ABS;XST:AUS,EUR,JAP	
15	71312661A	THRUST WASHER 17.3X31X3.15	1	22/02/2012		DFR:N;MOD:M796 ABS;XST:AUS,EUR,JAP	
16	85610311A	THRUST WASHER 0.5 MM	1	24/12/2009		DFR:N;MOD:M796 ABS;XST:AUS,EUR,JAP	
17	067016170	THRUST WASHER 0.8 MM	1	22/02/2012		DFR:N;MOD:M796 ABS;XST:AUS,EUR,JAP	

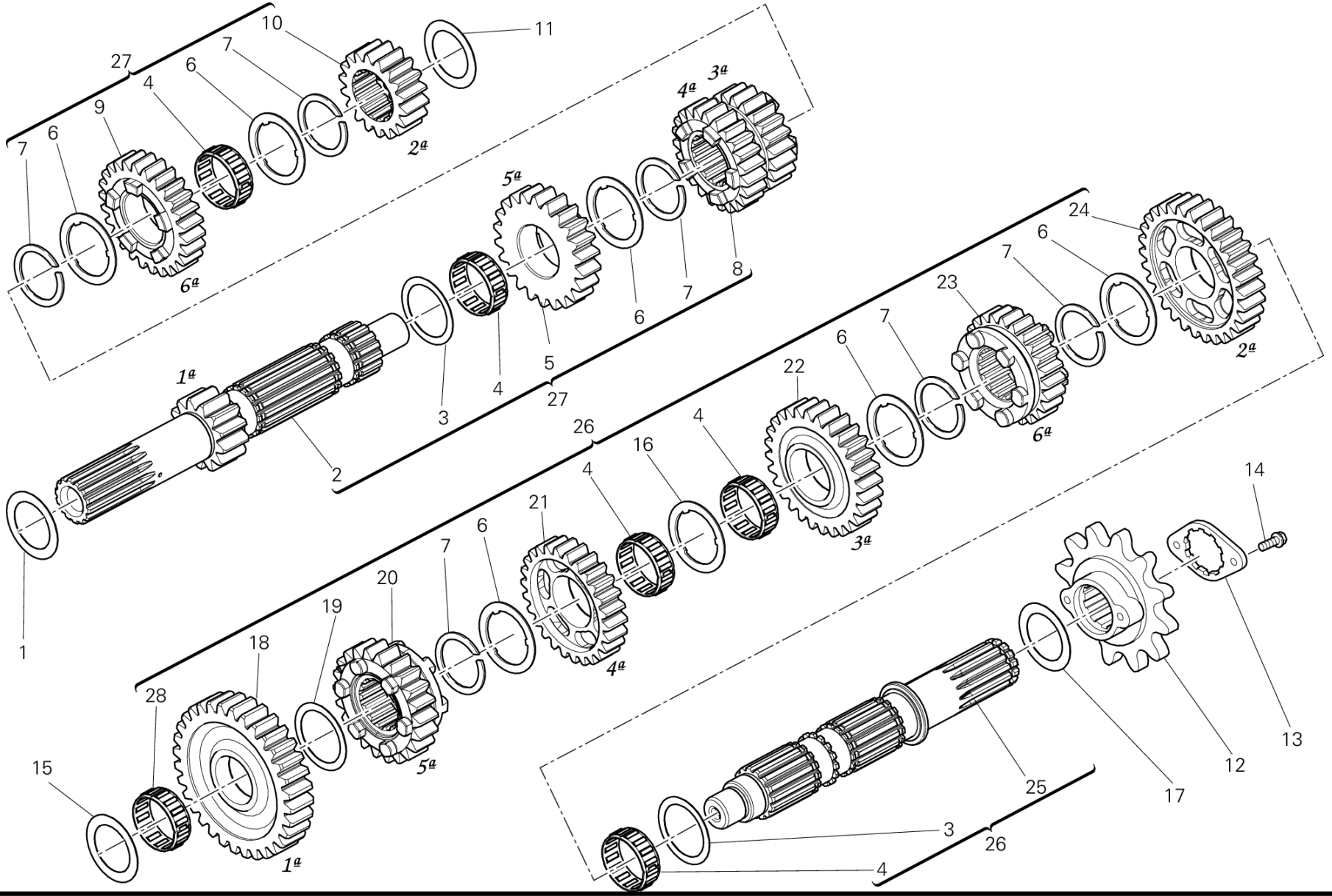
1ª
2ª
3ª
4ª
5ª
6ª
1
2
3
4
5
6
7
8
9
10
11
12
13
14
15
16
17
18
19
20
21
22
23
24
25
26
27
28

POS.	CODE	DESCRIPTION	QTY	START DATE	END DATE	VALIDITY	NOTES
18	17211121A	DRIVEN GEAR 1ST SP.	1	24/12/2009		DFR:N;MOD:M796 ABS;XST:AUS,EUR,JAP	
19	067016155	THRUST WASHER 1 MM	1	24/12/2009		DFR:N;MOD:M796 ABS;XST:AUS,EUR,JAP	
20	17211161A	DRIVEN GEAR 5TH SPEED T22	1	24/12/2009		DFR:N;MOD:M796 ABS;XST:AUS,EUR,JAP	
21	17211151A	DRIVEN GEAR 4TH SPEED T:26	1	24/12/2009		DFR:N;MOD:M796 ABS;XST:AUS,EUR,JAP	
22	17211141A	DRIVEN GEAR 3RD SPEED T28	1	24/12/2009		DFR:N;MOD:M796 ABS;XST:AUS,EUR,JAP	
23	17211171A	DRIVEN GEAR 6TH SPEEDT:24	1	24/12/2009		DFR:N;MOD:M796 ABS;XST:AUS,EUR,JAP	
24	17211131A	DRIVEN GEAR 2ND SPEED T30	1	24/12/2009		DFR:N;MOD:M796 ABS;XST:AUS,EUR,JAP	
25	14910341A	DRIVEN SHAFT	1	24/12/2009		DFR:N;MOD:M796 ABS;XST:AUS,EUR,JAP	
26	15021021A	DRIVEN SHAFT	1	24/12/2009		DFR:N;MOD:M796 ABS;XST:AUS,EUR,JAP	
27	15021011A	COMPLETE MAIN SHAFT	1	24/12/2009		DFR:N;MOD:M796 ABS;XST:AUS,EUR,JAP	
28	764020002	BEARING, NEEDLE	1	24/12/2009		DFR:N;MOD:M796 ABS;XST:AUS,EUR,JAP	

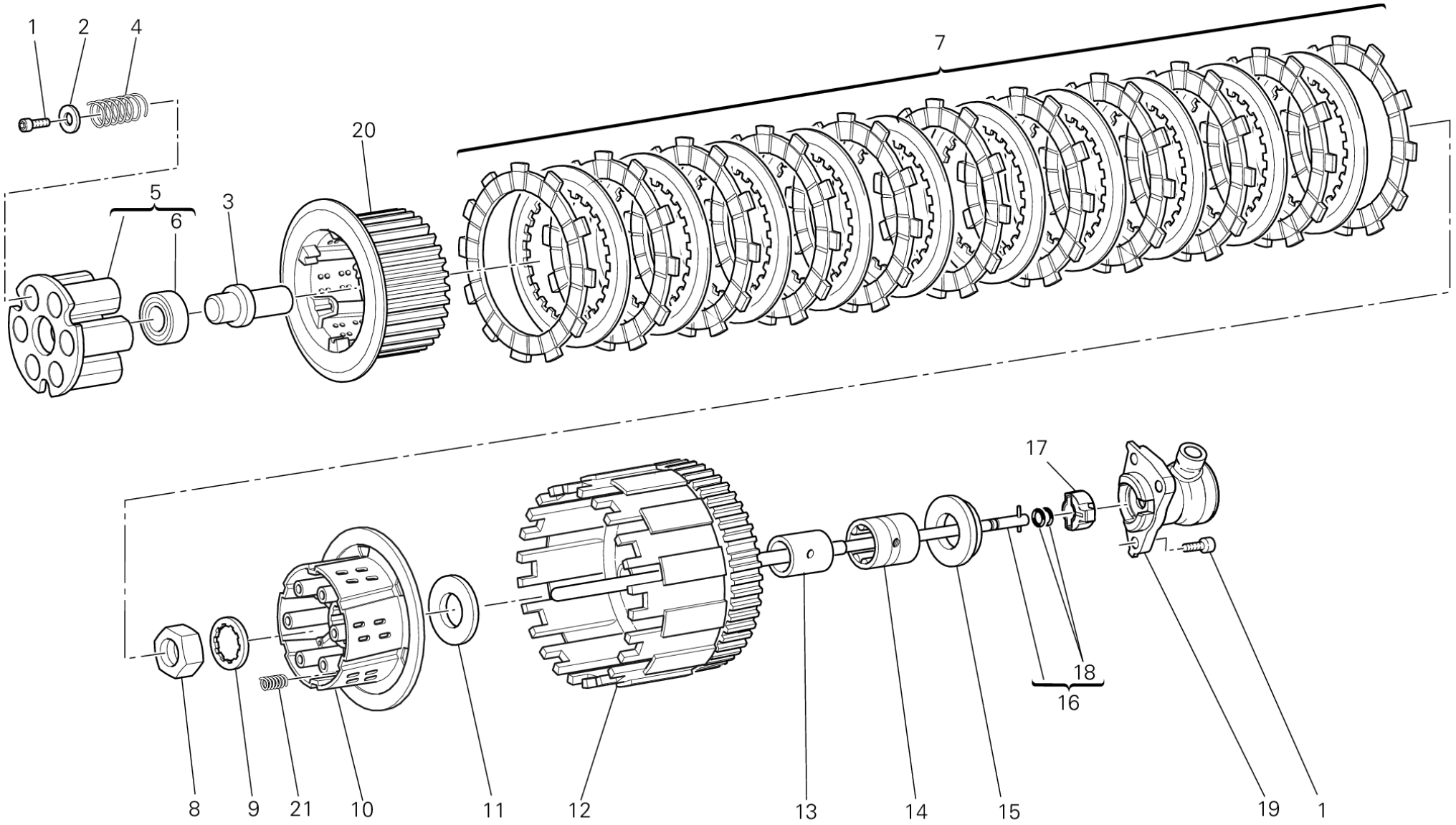

CMB00303

POS.	CODE	DESCRIPTION	QTY	START DATE	END DATE	VALIDITY	NOTES
1	77150658B	SCREW TCEI M6X16	9	22/02/2012		DFR:N;MOD:M796 ABS;XST:AUS,EUR,JAP	
2	85211771A	WASHER 6.6X18X8	6	22/02/2012		DFR:N;MOD:M796 ABS;XST:AUS,EUR,JAP	
3	81810151A	PIECE, CLUTCH PUSH	1	24/12/2009		DFR:N;MOD:M796 ABS;XST:AUS,EUR,JAP	
4	79710221A	CLUTCH SPRING	6	22/02/2012		DFR:N;MOD:M796 ABS;XST:AUS,EUR,JAP	
5	19420201A	DISK, CLUTCH PRESSURE	1	22/02/2012		DFR:N;MOD:M796 ABS;XST:AUS,EUR,JAP	
6	70250381A	BEARING 12X32X10	1	24/12/2009		DFR:N;MOD:M796 ABS;XST:AUS,EUR,JAP	
7	19020161A	CLUTCH DISC SET	1	22/02/2012		DFR:N;MOD:M796 ABS;XST:AUS,EUR,JAP	
8	75010071A	NUT M25X1.5	1	22/02/2012		DFR:N;MOD:M796 ABS;XST:AUS,EUR,JAP	
9	85110201A	LOCK WASHER	1	22/02/2012		DFR:N;MOD:M796 ABS;XST:AUS,EUR,JAP	
10	19610241A	CLUTCH DRUM	1	24/12/2009		DFR:N;MOD:M796 ABS;XST:AUS,EUR,JAP	
11	85610141A	WASHER, THRUST	1	24/12/2009		DFR:N;MOD:M796 ABS;XST:AUS,EUR,JAP	
12	19810331A	PRIMARY DRIVEN GEAR COMP.	1	24/12/2009		DFR:N;MOD:M796 ABS;XST:AUS,EUR,JAP	
13	88110261A	BEARING INNER RING	1	22/02/2012		DFR:N;MOD:M796 ABS;XST:AUS,EUR,JAP	
14	70250151A	BEARING, NEEDLE	1	24/12/2009		DFR:N;MOD:M796 ABS;XST:AUS,EUR,JAP	
15	71311191A	SPACER	1	22/02/2012		DFR:N;MOD:M796 ABS;XST:AUS,EUR,JAP	
16	11721192A	CLUTCH CONTROL ROD	1	22/02/2012		DFR:N;MOD:M796 ABS;XST:AUS,EUR,JAP	
17	71319261A	ANTI-ROTATION INSERT	1	23/02/2012		DFR:N;MOD:M796 ABS;XST:AUS,EUR,JAP	

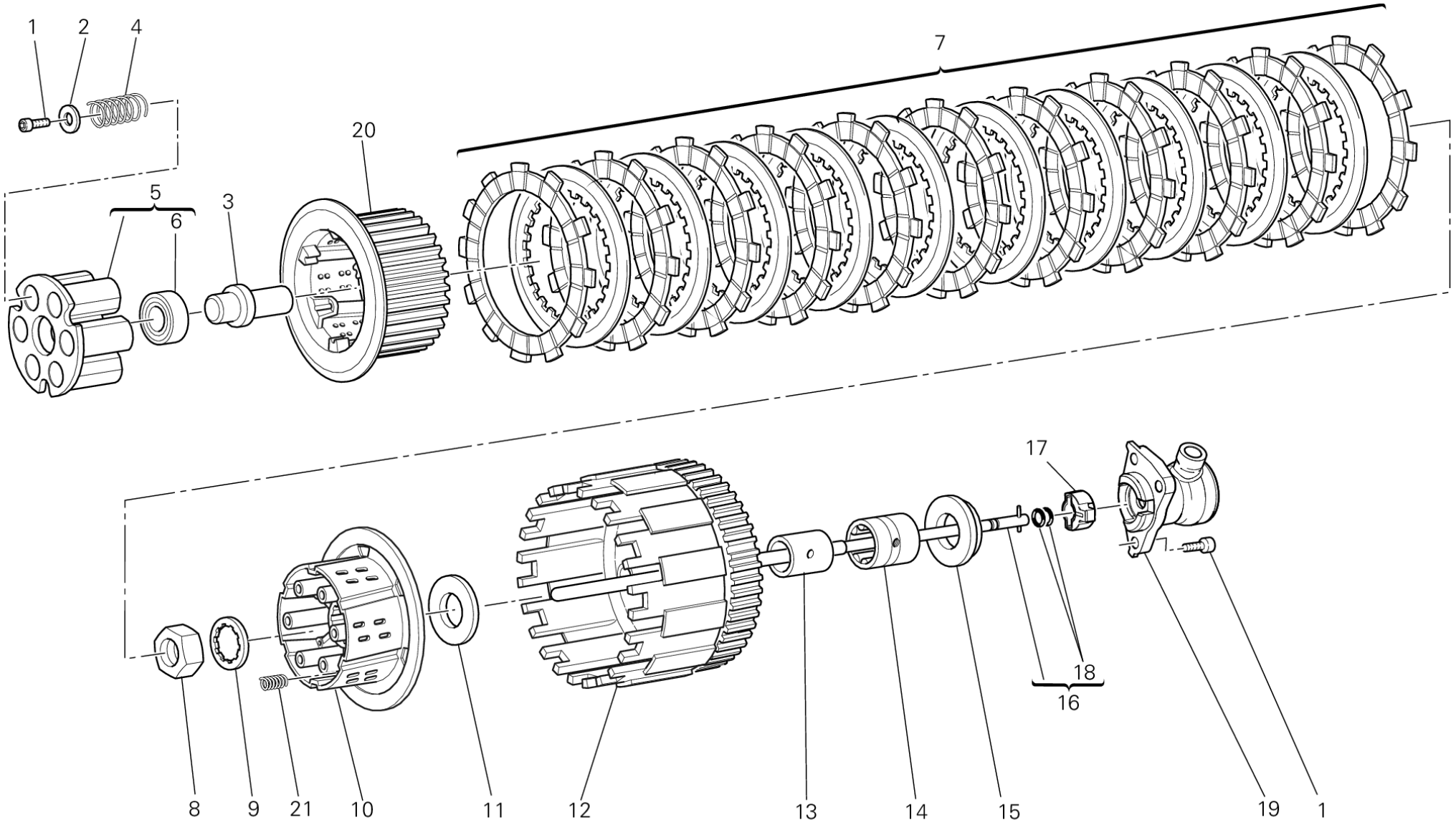

CMB00303

POS.	CODE	DESCRIPTION	QTY	START DATE	END DATE	VALIDITY	NOTES
18	88641731A	O-RING 1.78X4.76	2	18/07/2011		DFR:N;MOD:M796 ABS;XST:AUS,EUR,JAP	
19	19540031C	PISTON ASSEMBLY	1	24/12/2009		DFR:N;MOD:M796 ABS;XST:AUS,EUR,JAP	
20	19610251A	BOSS, CLUTCH	1	24/12/2009		DFR:N;MOD:M796 ABS;XST:AUS,EUR,JAP	
21	79710171A	SPRING	3	24/12/2009		DFR:N;MOD:M796 ABS;XST:AUS,EUR,JAP	

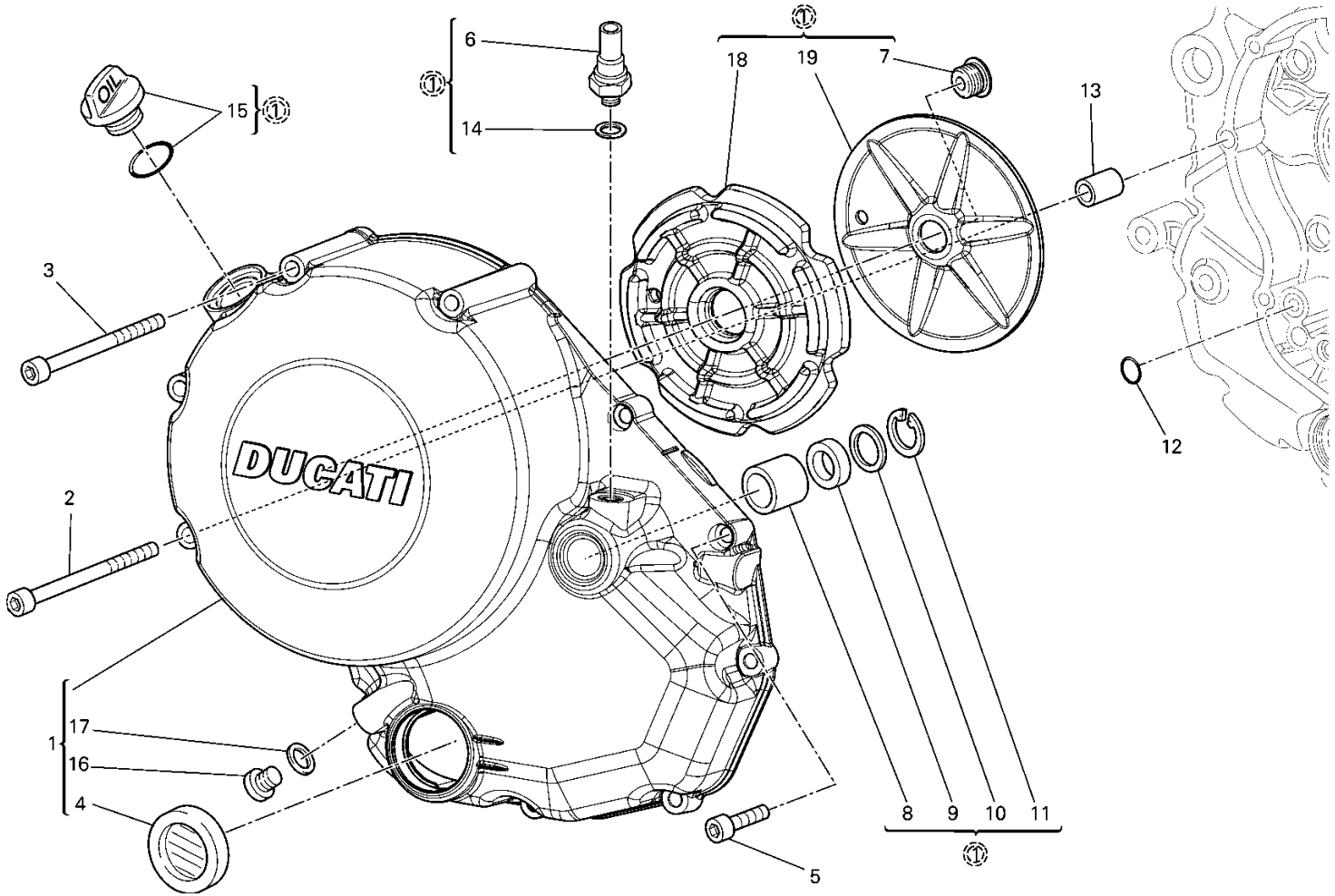

CRT00397

DRAWING 005 - CLUTCH COVER [MOD:M796 ABS;XST:AUS,EUR,JAP]

GROUP ENGINE

POS.	CODE	DESCRIPTION	QTY	START DATE	END DATE	VALIDITY	NOTES
1	24321181EC	CLUTCH COVER	1	27/02/2012		DFR:N;MOD:M796 ABS;XST:AUS,EUR,JAP	
2	77150838B	SCREW TCEI M6X90	1	15/03/2012		MOD:M796 ABS;XST:AUS,EUR,JAP	
3	77150818B	SCREW TCEI M6X80	3	15/03/2012		MOD:M796 ABS;XST:AUS,EUR,JAP	
4	25440012A	WINDOW, OIL LEVEL CHECK	1	01/01/2011		MOD:M796 ABS;XST:AUS,EUR,JAP	
5	77110518B	SCREW TCEI M6X25	6			MOD:M796 ABS;XST:AUS,EUR,JAP	
6	53940302A	SWITCH ASSY, OIL PRESSURE	1	15/03/2012		MOD:M796 ABS;XST:AUS,EUR,JAP	
7	77915011A	SCREW	1	01/01/2011		MOD:M796 ABS;XST:AUS,EUR,JAP	
8	066549680	BUSH	1	01/01/2011		MOD:M796 ABS;XST:AUS,EUR,JAP	
9	93040211A	OIL SEAL	1	01/01/2011		MOD:M796 ABS;XST:AUS,EUR,JAP	
10	85211351A	THRUST WASHER 20.8X37.8X1	1	01/01/2011		MOD:M796 ABS;XST:AUS,EUR,JAP	
11	88450131A	CIRCLIP	1	01/01/2011		MOD:M796 ABS;XST:AUS,EUR,JAP	
12	88641321A	O-RING 11.11X1.78	1	31/12/2030		MOD:M796 ABS;XST:AUS,EUR,JAP	
13	71111601A	PIN DOWEL	1	15/03/2012		MOD:M796 ABS;XST:AUS,EUR,JAP	
14	85211951A	GASKET 10.5X17X2	1	15/03/2012		MOD:M796 ABS;XST:AUS,EUR,JAP	
15	89320121A	PLUG ASSY	1	01/01/2011		MOD:M796 ABS;XST:AUS,EUR,JAP	
16	85250241A	WASHER 10X14X1	1	01/01/2011		MOD:M796 ABS;XST:AUS,EUR,JAP	
17	78050012A	PLUG, THREADED M10X1	1	01/01/2011		MOD:M796 ABS;XST:AUS,EUR,JAP	
18	48610721A	DAMPER, SOUND ARRESTER	1	01/01/2011		MOD:M796 ABS;XST:AUS,EUR,JAP	
19	82714331A	PLATE, SOUND ARRESTER DAMPER	1	01/01/2011		MOD:M796 ABS;XST:AUS,EUR,JAP	

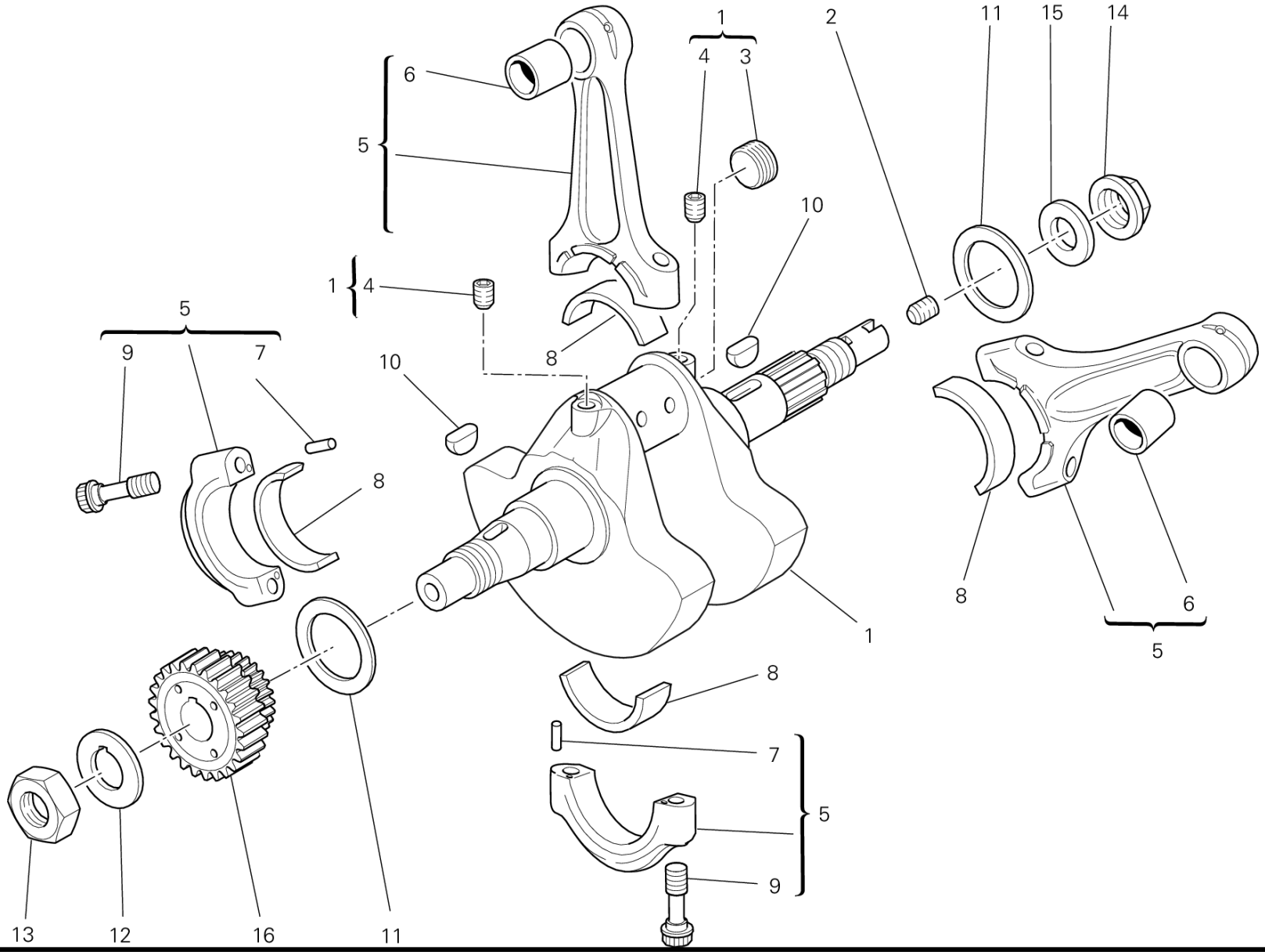
1
4
3
6
5
2
11
15
14
10
1
4
5
9
7
10
8
8
1
8
8
6
5
7
5
9
13
12
16
11

POS.	CODE	DESCRIPTION	QTY	START DATE	END DATE	VALIDITY	NOTES
1	14621791A	CRANKSHAFT	1	08/05/2012		DFR:N;MOD:M796 ABS;XST:AUS,EUR,JAP	
2	77911092A	SCREW, SPECIAL	1	27/02/2012		DFR:N;MOD:M796 ABS;XST:AUS,EUR,JAP	
3	78010161A	THREADED PLUG M20X1	1	27/02/2012		DFR:N;MOD:M796 ABS;XST:AUS,EUR,JAP	
4	77915471A	THREADED DOWEL STEI M8X8	2	27/02/2012		DFR:N;MOD:M796 ABS;XST:AUS,EUR,JAP	
5	15820251A	CONNECTING RODS PAIR	1	27/02/2012		DFR:N;MOD:M796 ABS;XST:AUS,EUR,JAP	
6	066047290	PLANE BEARING, CONNECTING ROD	2	24/12/2009		DFR:N;MOD:M796 ABS;XST:AUS,EUR,JAP	
7	742240570	PIN 2.5X10 SW	4	24/12/2009		DFR:N;MOD:M796 ABS;XST:AUS,EUR,JAP	
8	11210801AA	HALF-BEARING RED	2	28/02/2012		DFR:N;MOD:M796 ABS;XST:AUS,EUR,JAP	
	11210801AB	HALF-BEARING BLUE	2	28/02/2012		DFR:N;MOD:M796 ABS;XST:AUS,EUR,JAP	
9	77914041A	BOLT, CONNECTING ROD	4	18/07/2011		DFR:N;MOD:M796 ABS;XST:AUS,EUR,JAP	
10	68010131A	KEY, WOODRUFF 4X5X10	2	27/02/2012		DFR:N;MOD:M796 ABS;XST:AUS,EUR,JAP	
11	85211041H	THRUST WASHER 50X35X2.25	2			MOD:M796 ABS;XST:AUS,EUR,JAP	
	85211041M	THRUST WASHER 50X35X2.5	2			MOD:M796 ABS;XST:AUS,EUR,JAP	
	85211041N	THRUST WASHER 50X35X2.55	2			MOD:M796 ABS;XST:AUS,EUR,JAP	
	85211042A	THRUST WASHER 50X35X1.9	2			MOD:M796 ABS;XST:AUS,EUR,JAP	
	85211042B	THRUST WASHER 50X35X1.95	2			MOD:M796 ABS;XST:AUS,EUR,JAP	
	85211042C	SHIM 50X35X2	2			MOD:M796 ABS;XST:AUS,EUR,JAP	
	85211042D	THRUST WASHER 50X35X2.05	2			MOD:M796 ABS;XST:AUS,EUR,JAP	
	85211042E	THRUST WASHER 50X35X2.1	2			MOD:M796 ABS;XST:AUS,EUR,JAP	
	85211042F	THRUST WASHER 50X35X2.15	2			MOD:M796 ABS;XST:AUS,EUR,JAP	
	85211042G	THRUST WASHER 50X35X2.2	2			MOD:M796 ABS;XST:AUS,EUR,JAP	
	85211042I	THRUST WASHER 50X35X2.3	2			MOD:M796 ABS;XST:AUS,EUR,JAP	
	85211042J	THRUST WASHER 50X35X2.35	2			MOD:M796 ABS;XST:AUS,EUR,JAP	
	85211042K	SHIM TH. 2,4	2			MOD:M796 ABS;XST:AUS,EUR,JAP	

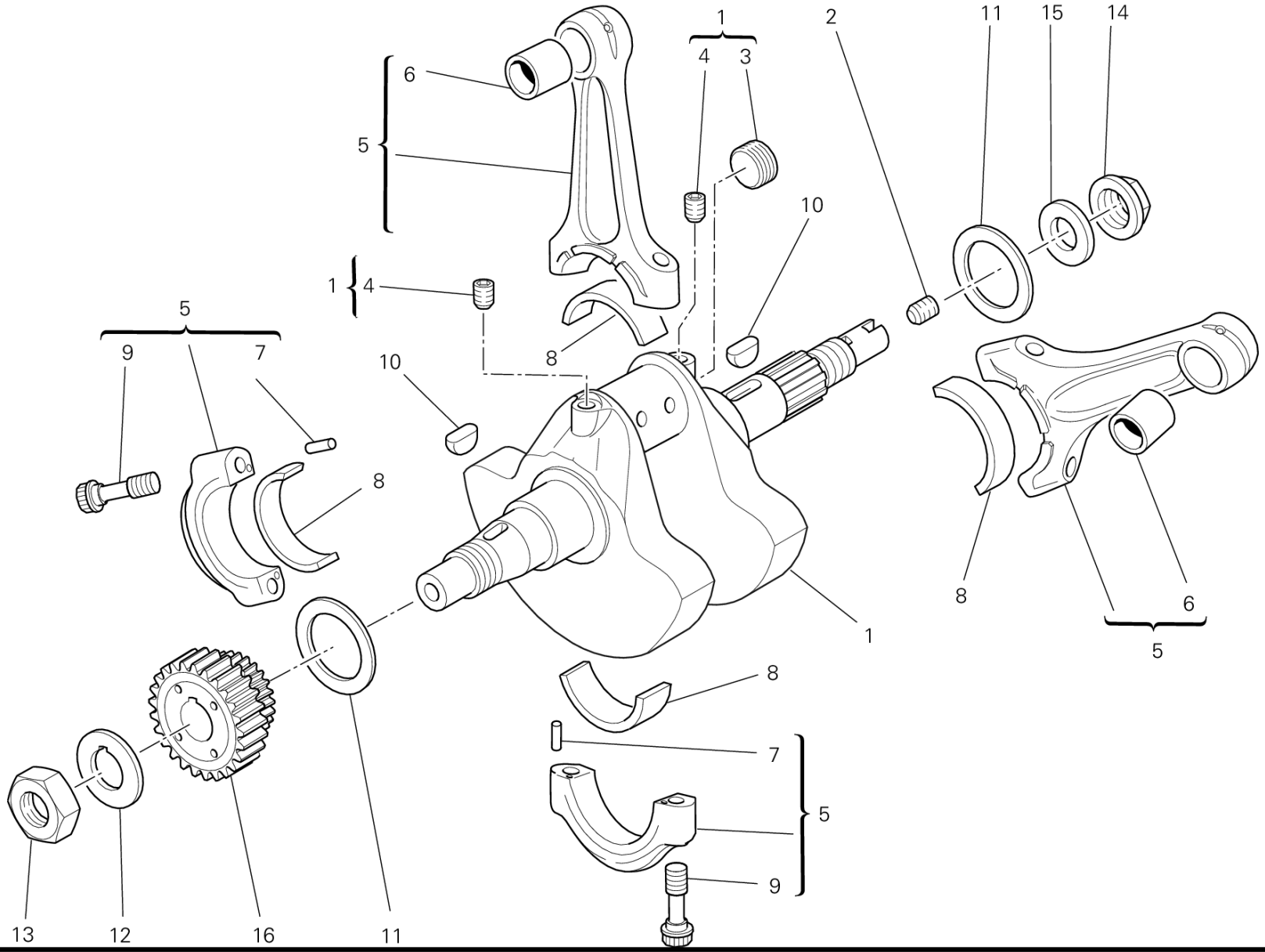
1
4
3
6
5
2
11
15
14
10
1
4
5
9
7
10
8
8
1
8
6
5
8
7
5
9
13
12
16
11

POS.	CODE	DESCRIPTION	QTY	START DATE	END DATE	VALIDITY	NOTES
	85211042L	SHIM TH. 2,45	2			MOD:M796 ABS;XST:AUS,EUR,JAP	
12	85110191A	WASHER, LOCK	1	27/02/2012		DFR:N;MOD:M796 ABS;XST:AUS,EUR,JAP	
13	75011611A	NUT	1	27/02/2012		DFR:N;MOD:M796 ABS;XST:AUS,EUR,JAP	
14	75010121D	NUT, SPECIAL	1	27/02/2012		DFR:N;MOD:M796 ABS;XST:AUS,EUR,JAP	
15	85212691A	WASHER	1	27/02/2012		DFR:N;MOD:M796 ABS;XST:AUS,EUR,JAP	
16	17010511A	GEAR, PRIMARY DRIVE T25/33	1	24/12/2009		DFR:N;MOD:M796 ABS;XST:AUS,EUR,JAP	

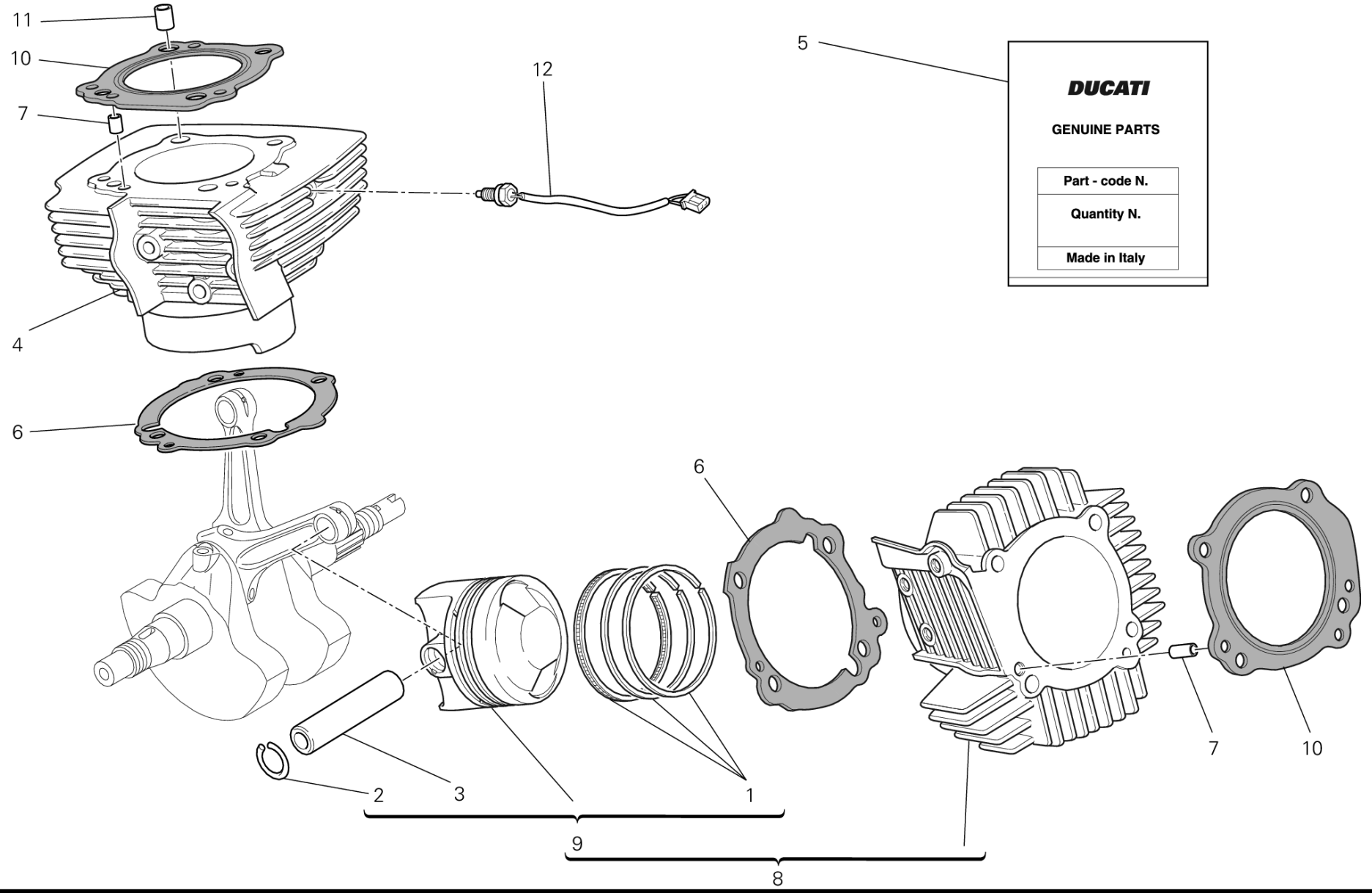
11
10
7
12
5
4
6
6
7
10
2
3
1
9
8
DUCATI
GENUINE PARTS
Part - code N.
Quantity N.
Made in Italy

POS.	CODE	DESCRIPTION	QTY	START DATE	END DATE	VALIDITY	NOTES
1	12120531B	PISTON RING SET	2	22/02/2012		DFR:N;MOD:M796 ABS;XST:AUS,EUR,JAP	
2	12111741A	CIRCLIP, PISTON PIN	4	22/02/2012		DFR:N;MOD:M796 ABS;XST:AUS,EUR,JAP	
3	12113031A	PISTON PIN	2	22/02/2012		DFR:N;MOD:M796 ABS;XST:AUS,EUR,JAP	
4	12021601B	VERTICAL CYLINDER-PISTON FIT	1	22/02/2012		DFR:N;MOD:M796 ABS;XST:AUS,EUR,JAP	
5	79120461B	HEAD-CYLINDER GASKETENVELOPE	1	22/02/2012		DFR:N;MOD:M796 ABS;XST:AUS,EUR,JAP	
6	78610851A	CYLINDER-CRANKCASE GASKET	2	22/02/2012		DFR:N;MOD:M796 ABS;XST:AUS,EUR,JAP	
7	71111721A	PIN DOWEL	2	22/02/2012		DFR:N;MOD:M796 ABS;XST:AUS,EUR,JAP	
8	12021611B	HORIZONTAL CYLINDER-PISTON FIT	1	22/02/2012		DFR:N;MOD:M796 ABS;XST:AUS,EUR,JAP	
9	12221611C	PISTON ASSY	2	22/02/2012		DFR:N;MOD:M796 ABS;XST:AUS,EUR,JAP	
10	78611041A	GASKET, CYLINDER HEAD	2	22/02/2012		DFR:N;MOD:M796 ABS;XST:AUS,EUR,JAP	
11	71111261A	BUSH	4	22/02/2012		DFR:N;MOD:M796 ABS;XST:AUS,EUR,JAP	
12	55241452A	SENSOR, TEMPERATURE	1	22/02/2012		DFR:N;MOD:M796 ABS;XST:AUS,EUR,JAP	

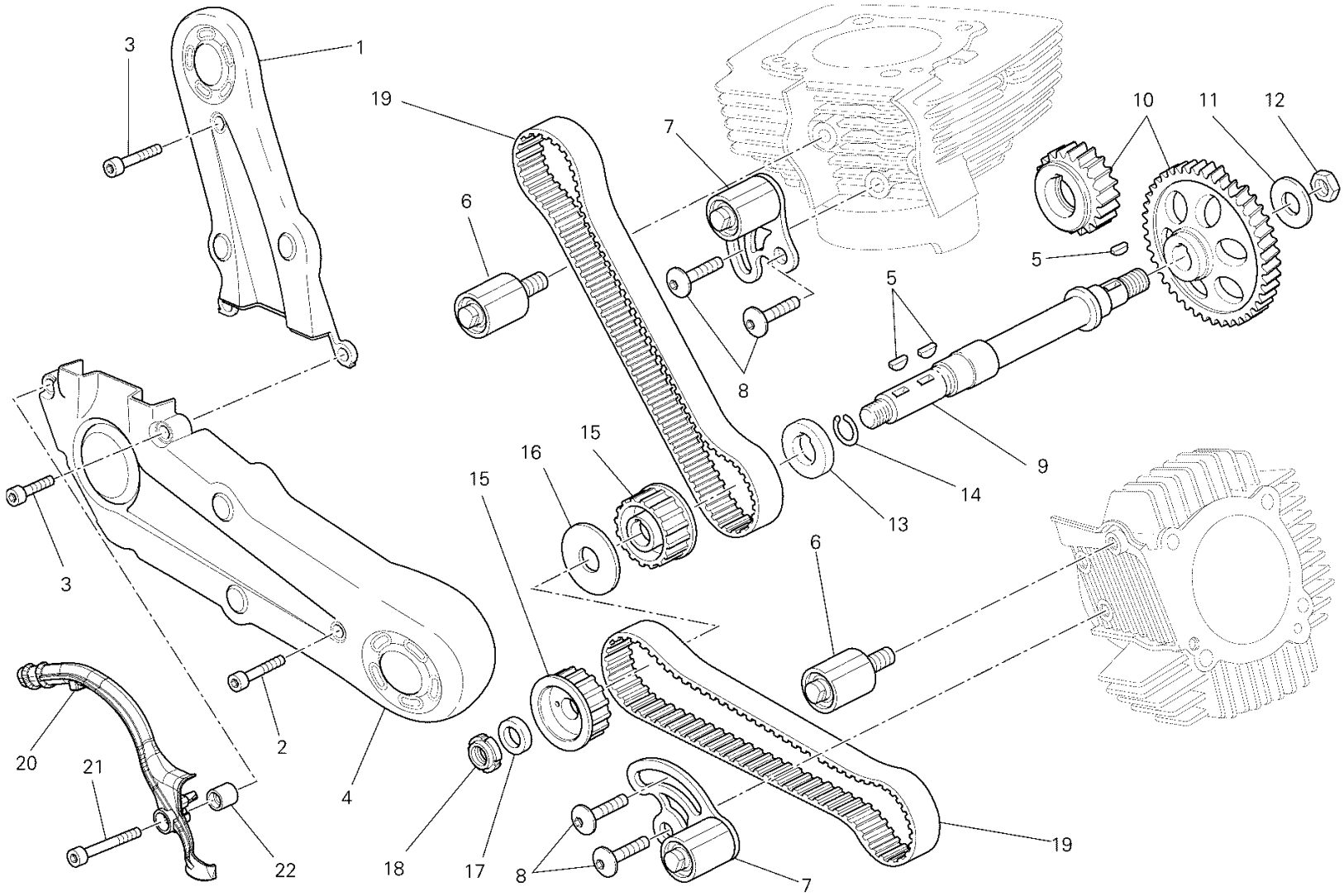

TST00422

DRAWING 008 - TIMING BELT [MOD:M796 ABS;XST:AUS,EUR,JAP]

GROUP ENGINE

POS.	CODE	DESCRIPTION	QTY	START DATE	END DATE	VALIDITY	NOTES
1	24510791A	VERTICAL TIMING BELT COVER	1	27/02/2012		DFR:N;MOD:M796 ABS;XST:AUS,EUR,JAP	
2	77110521A	SCREW TCEI M6X30	1	15/03/2012		MOD:M796 ABS;XST:AUS,EUR,JAP	
3	77110491A	SCREW TCEI M6X18	2	15/03/2012		MOD:M796 ABS;XST:AUS,EUR,JAP	
4	24510801A	HORIZONTAL TIMING BELT COVER	1	27/02/2012		DFR:N;MOD:M796 ABS;XST:AUS,EUR,JAP	
5	68010131A	KEY, WOODRUFF 4X5X10	3	15/03/2012		MOD:M796 ABS;XST:AUS,EUR,JAP	
6	45120211A	TENSIONER TIMING BELT FIXED	2	01/10/2010		MOD:M796 ABS;XST:AUS,EUR,JAP	
7	45120201A	TENSIONER, TIMING BELT MOVABLE	2	15/03/2012		MOD:M796 ABS;XST:AUS,EUR,JAP	
8	77210103A	SCREW	4	15/03/2012		MOD:M796 ABS;XST:AUS,EUR,JAP	
9	147Z0011A	LAY SHAFT	1	15/03/2012		MOD:M796 ABS;XST:AUS,EUR,JAP	
10	17121081A	TIMING GEARS SET	1	27/02/2012		DFR:N;MOD:M796 ABS;XST:AUS,EUR,JAP	
11	85110131A	WASHER, LOCK	1	15/03/2012		MOD:M796 ABS;XST:AUS,EUR,JAP	
12	75011601A	NUT M14X1X7	1	15/03/2012		MOD:M796 ABS;XST:AUS,EUR,JAP	
13	71610732A	SPACER	1	15/03/2012		MOD:M796 ABS;XST:AUS,EUR,JAP	
14	88210031A	SNAP RING	1	15/03/2012		MOD:M796 ABS;XST:AUS,EUR,JAP	
15	25510233A	TIMING BELT PULLEY, DRIVE T20	2	15/03/2012		MOD:M796 ABS;XST:AUS,EUR,JAP	
16	85610623A	WASHER, BELT PULLEY	1	15/03/2012		MOD:M796 ABS;XST:AUS,EUR,JAP	
17	71610991A	SPACER	1	15/03/2012		MOD:M796 ABS;XST:AUS,EUR,JAP	
18	70350062A	ELASTIC-STOP RING NUT	1	15/03/2012		MOD:M796 ABS;XST:AUS,EUR,JAP	
19	73740242A	TIMING DRIVE TOOTHED BELT	2	27/02/2012		DFR:N;MOD:M796 ABS;XST:AUS,EUR,JAP	
20	75810481A	CLAMP, WIRE	1	23/02/2012		MOD:M796 ABS;XST:AUS,EUR,JAP	
21	77113761A	SCREW TCEI M6X45	1	23/02/2012		DFR:N;MOD:M796 ABS;XST:AUS,EUR,JAP	
22	71319071A	SPACER	1	23/02/2012		MOD:M796 ABS;XST:AUS,EUR,JAP	

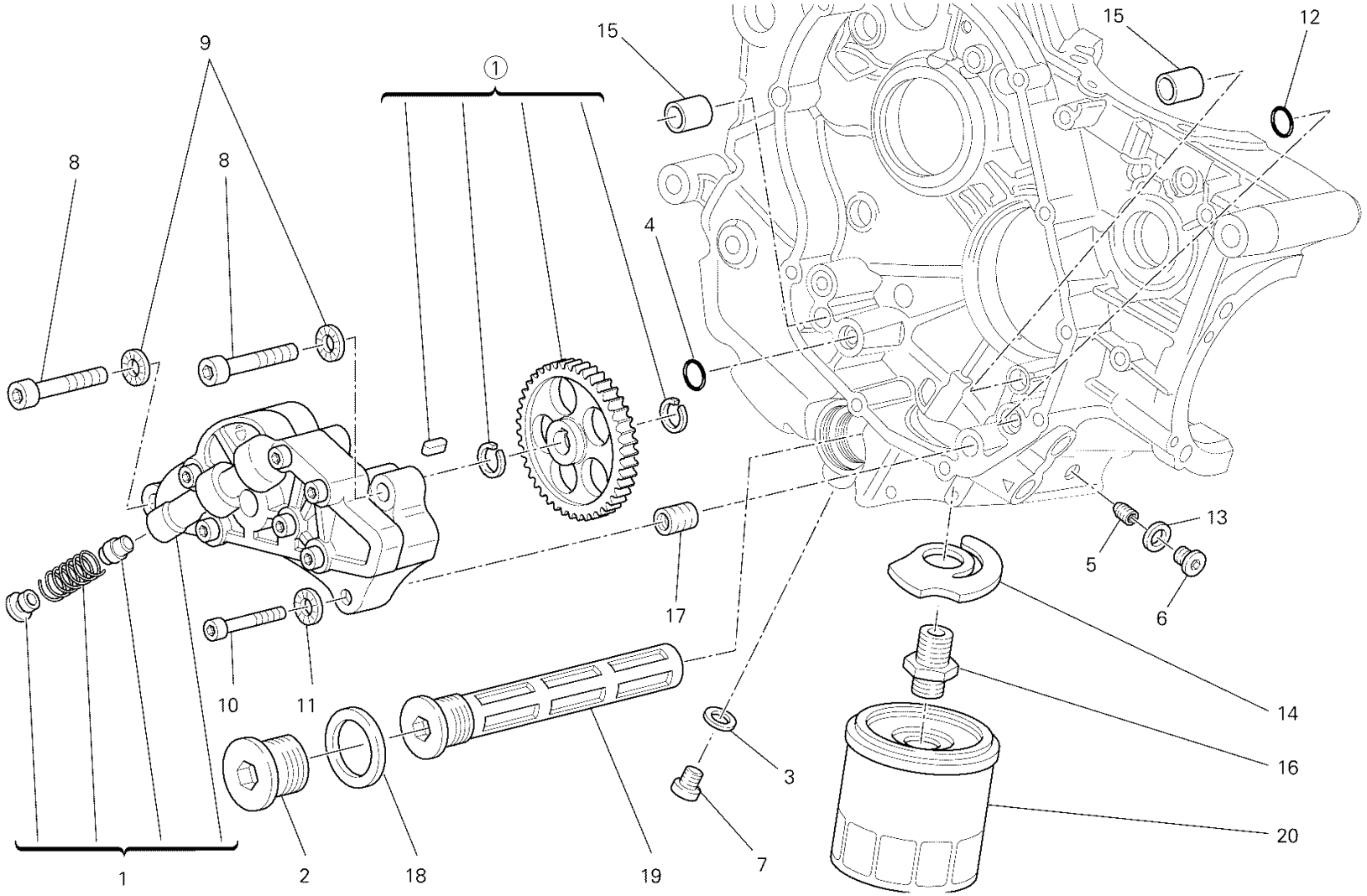

RAF00344

DRAWING 009 - OIL PUMP - FILTER [MOD:M796 ABS;XST:AUS,EUR,JAP]

GROUP ENGINE

POS.	CODE	DESCRIPTION	QTY	START DATE	END DATE	VALIDITY	NOTES
1	174Z0021A	OIL PUMP	1	15/03/2012		MOD:M796 ABS;XST:AUS,EUR,JAP	
2	87310371A	THREADED PLUG M32X1.5	1	15/03/2012		MOD:M796 ABS;XST:AUS,EUR,JAP	
3	85211201A	ALUMINIUM GASKET	1	22/12/2011		MOD:M796 ABS;XST:AUS,EUR,JAP	
4	88640371A	O-RING 14X1.78	1	15/03/2012		MOD:M796 ABS;XST:AUS,EUR,JAP	
5	77840041A	THREADED DOWEL M10X1	1	22/12/2011		MOD:M796 ABS;XST:AUS,EUR,JAP	
6	77911622A	SCREW TCEI M10X1.5X16	1	22/12/2011		MOD:M796 ABS;XST:AUS,EUR,JAP	
7	77911982A	THREADED PLUG M15X1	1	22/12/2011		MOD:M796 ABS;XST:AUS,EUR,JAP	
8	77151298B	SCREW TCEI M8X40	2	15/03/2012		MOD:M796 ABS;XST:AUS,EUR,JAP	
9	85310021A	SPRING WASHER 8 MM	2	15/03/2012		MOD:M796 ABS;XST:AUS,EUR,JAP	
10	77110518B	SCREW TCEI M6X25	1	15/03/2012		MOD:M796 ABS;XST:AUS,EUR,JAP	
11	85310041A	SPRING WASHER 6 MM	1	15/03/2012		MOD:M796 ABS;XST:AUS,EUR,JAP	
12	88641321A	O-RING 11.11X1.78	3	31/12/2030		MOD:M796 ABS;XST:AUS,EUR,JAP	
13	85211951A	GASKET 10.5X17X2	1	15/03/2012		MOD:M796 ABS;XST:AUS,EUR,JAP	
14	79920772A	BYPASS SPRING	1	22/12/2011		MOD:M796 ABS;XST:AUS,EUR,JAP	
15	075949280	LOCATING DOWEL	2	15/03/2012		MOD:M796 ABS;XST:AUS,EUR,JAP	
16	81510281A	BOLT UNION	1	22/12/2011		MOD:M796 ABS;XST:AUS,EUR,JAP	
17	067049310	BUSH	1	22/12/2011		MOD:M796 ABS;XST:AUS,EUR,JAP	
18	85250051A	GASKET 32X38X1.5	1	15/03/2012		MOD:M796 ABS;XST:AUS,EUR,JAP	
19	89420091A	STRAINER, OIL	1	15/03/2012		MOD:M796 ABS;XST:AUS,EUR,JAP	
20	44440035A	FILTER, OIL	1	15/03/2012		MOD:M796 ABS;XST:AUS,EUR,JAP	

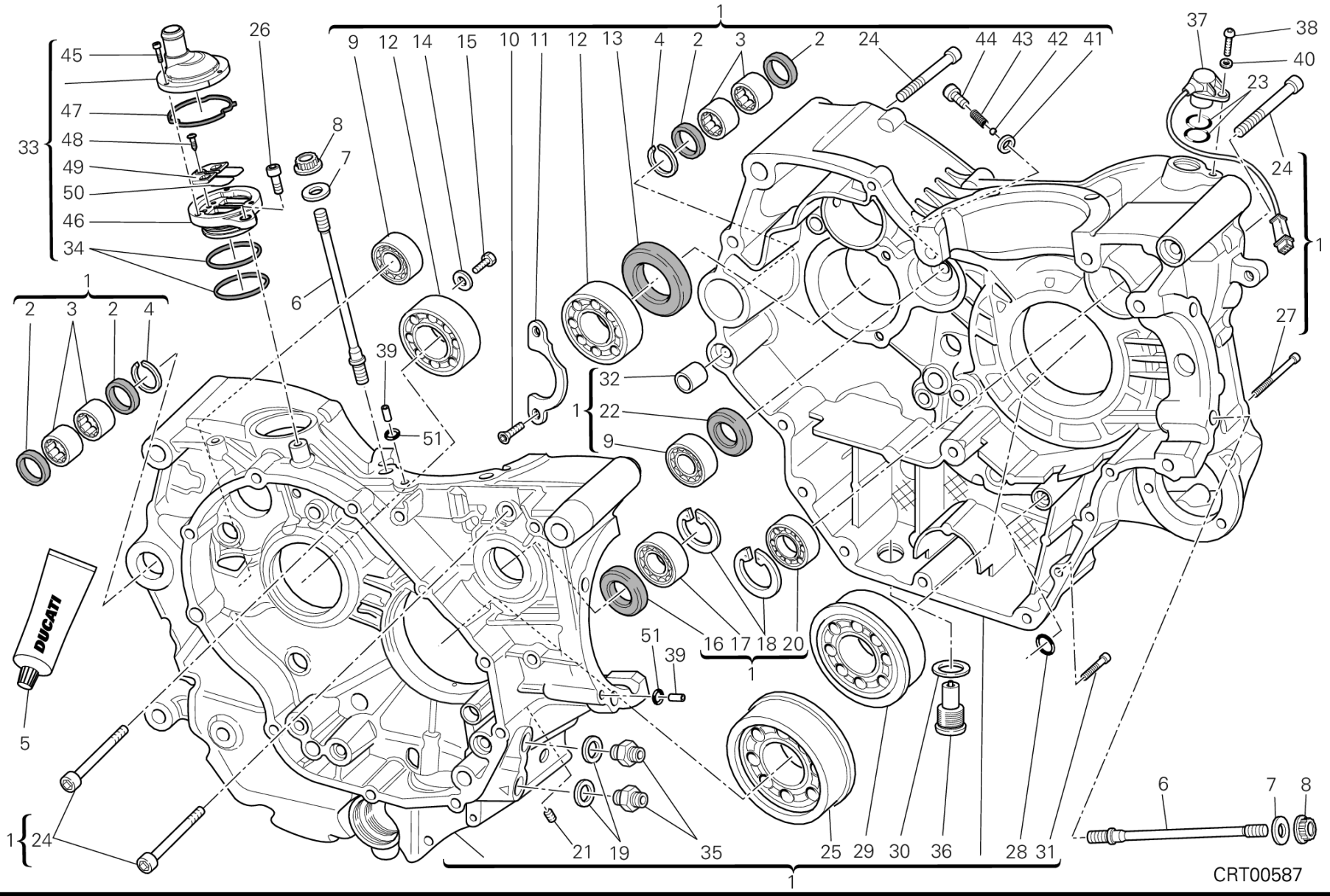
CRT00587

POS.	CODE	DESCRIPTION	QTY	START DATE	END DATE	VALIDITY	NOTES
1	22522641E	COMPLETE HALF-CRANKCASES PAIR	1	22/02/2012		DFR:N;MOD:M796 ABS;XST:AUS,EUR,JAP	
2	93041271A	SEAL RING 20X26X4	4	22/02/2012		DFR:N;MOD:M796 ABS;XST:AUS,EUR,JAP	
3	764000004	BEARING, NEEDLE	4	22/02/2012		DFR:N;MOD:M796 ABS;XST:AUS,EUR,JAP	
4	88440531A	SPRING RING	2	22/02/2012		DFR:N;MOD:M796 ABS;XST:AUS,EUR,JAP	
5	942470014	LIQUID GASKET	1	22/02/2012		DFR:N;MOD:M796 ABS;XST:AUS,EUR,JAP	
6	76610671C	STUD BOLT FASTENING HEAD CYLINDER	8	22/02/2012		DFR:N;MOD:M796 ABS;XST:AUS,EUR,JAP	
7	85610642A	WASHER, SPECIAL 10.5X21X2	8	22/02/2012		DFR:N;MOD:M796 ABS;XST:AUS,EUR,JAP	
8	74810501A	NUT M10X1.5	8	22/02/2012		DFR:N;MOD:M796 ABS;XST:AUS,EUR,JAP	
9	70240401A	BEARING	2	22/02/2012		DFR:N;MOD:M796 ABS;XST:AUS,EUR,JAP	
10	720941616	SCREW TSPEI M6X12	2	22/02/2012		DFR:N;MOD:M796 ABS;XST:AUS,EUR,JAP	
11	036749275	PLATE, RETAINER	1	22/02/2012		DFR:N;MOD:M796 ABS;XST:AUS,EUR,JAP	
12	751202567	BEARING	2	22/02/2012		DFR:N;MOD:M796 ABS;XST:AUS,EUR,JAP	
13	066049268	OIL SEAL	1	22/02/2012		DFR:N;MOD:M796 ABS;XST:AUS,EUR,JAP	
14	71311401A	SPACER	2	22/02/2012		DFR:N;MOD:M796 ABS;XST:AUS,EUR,JAP	
15	77052508B	SCREW TE M6X16	2	22/02/2012		DFR:N;MOD:M796 ABS;XST:AUS,EUR,JAP	
16	93041231A	SEAL, OIL 18X30X6	1	22/02/2012		DFR:N;MOD:M796 ABS;XST:AUS,EUR,JAP	
17	757941542	BEARING	1	22/02/2012		DFR:N;MOD:M796 ABS;XST:AUS,EUR,JAP	

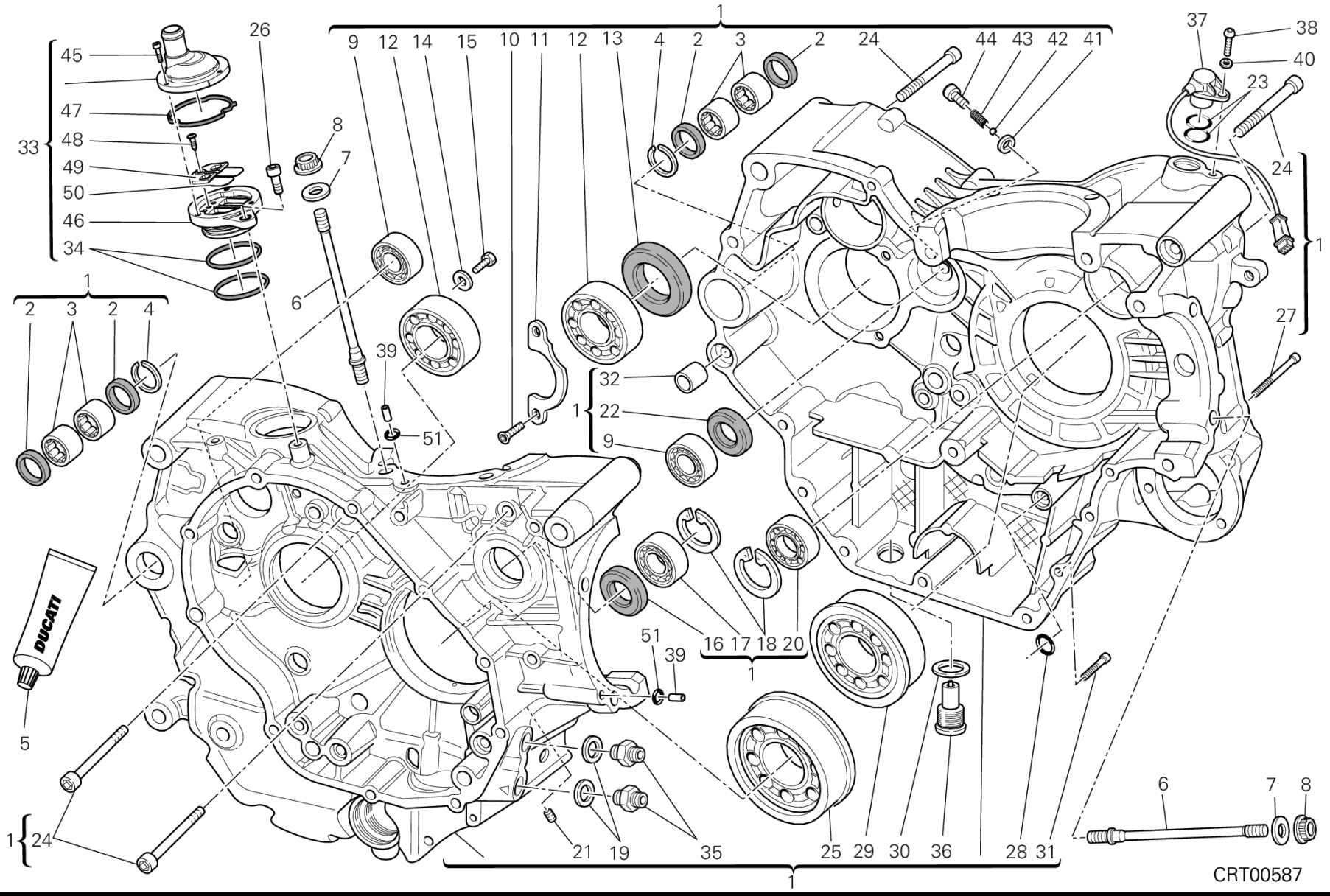
CRT00587

POS.	CODE	DESCRIPTION	QTY	START DATE	END DATE	VALIDITY	NOTES
18	735033380	CIRCLIP	2	22/02/2012		DFR:N;MOD:M796 ABS;XST:AUS,EUR,JAP	
19	78710111A	GASKET, ALUMINIUM 14X22X2	2	22/02/2012		DFR:N;MOD:M796 ABS;XST:AUS,EUR,JAP	
20	70250081A	BALL BEARING 6003 TN9 C3	1	22/02/2012		DFR:N;MOD:M796 ABS;XST:AUS,EUR,JAP	
21	77950621A	THREADED DOWEL M10X1	1	22/02/2012		DFR:N;MOD:M796 ABS;XST:AUS,EUR,JAP	
22	93040931A	SEAL, OIL 17X25X4	1	22/02/2012		DFR:N;MOD:M796 ABS;XST:AUS,EUR,JAP	
23	88640331A	O-RING 17.96X2.62	2	22/02/2012		DFR:N;MOD:M796 ABS;XST:AUS,EUR,JAP	
24	77151368B	SCREW TCEI M8X75	7	22/02/2012		DFR:N;MOD:M796 ABS;XST:AUS,EUR,JAP	
25	70240931A	BEARING 35X85X23	1	22/02/2012		DFR:N;MOD:M796 ABS;XST:AUS,EUR,JAP	
26	77150658B	SCREW TCEI M6X16	1	22/02/2012		DFR:N;MOD:M796 ABS;XST:AUS,EUR,JAP	
27	77150808B	SCREW TCEI M6X75	2	22/02/2012		DFR:N;MOD:M796 ABS;XST:AUS,EUR,JAP	
28	88641321A	O-RING 11.11X1.78	1	31/12/2030		DFR:N;MOD:M796 ABS;XST:AUS,EUR,JAP	
29	70240921A	BEARING 35X78X19	1	22/02/2012		DFR:N;MOD:M796 ABS;XST:AUS,EUR,JAP	
30	85250421A	COPPER GASKET 12.2X18X1.5 MM	1	22/02/2012		DFR:N;MOD:M796 ABS;XST:AUS,EUR,JAP	
31	77150728B	SCREW TCEI M6X35	7	22/02/2012		DFR:N;MOD:M796 ABS;XST:AUS,EUR,JAP	
32	71110951A	PIN DOWEL	2	22/02/2012		DFR:N;MOD:M796 ABS;XST:AUS,EUR,JAP	
33	59320621B	BREATHER VALVE	1	22/02/2012		DFR:N;MOD:M796 ABS;XST:AUS,EUR,JAP	
34	46320222A	O-RING	2	02/04/2010		DFR:N;MOD:M796 ABS;XST:AUS,EUR,JAP	

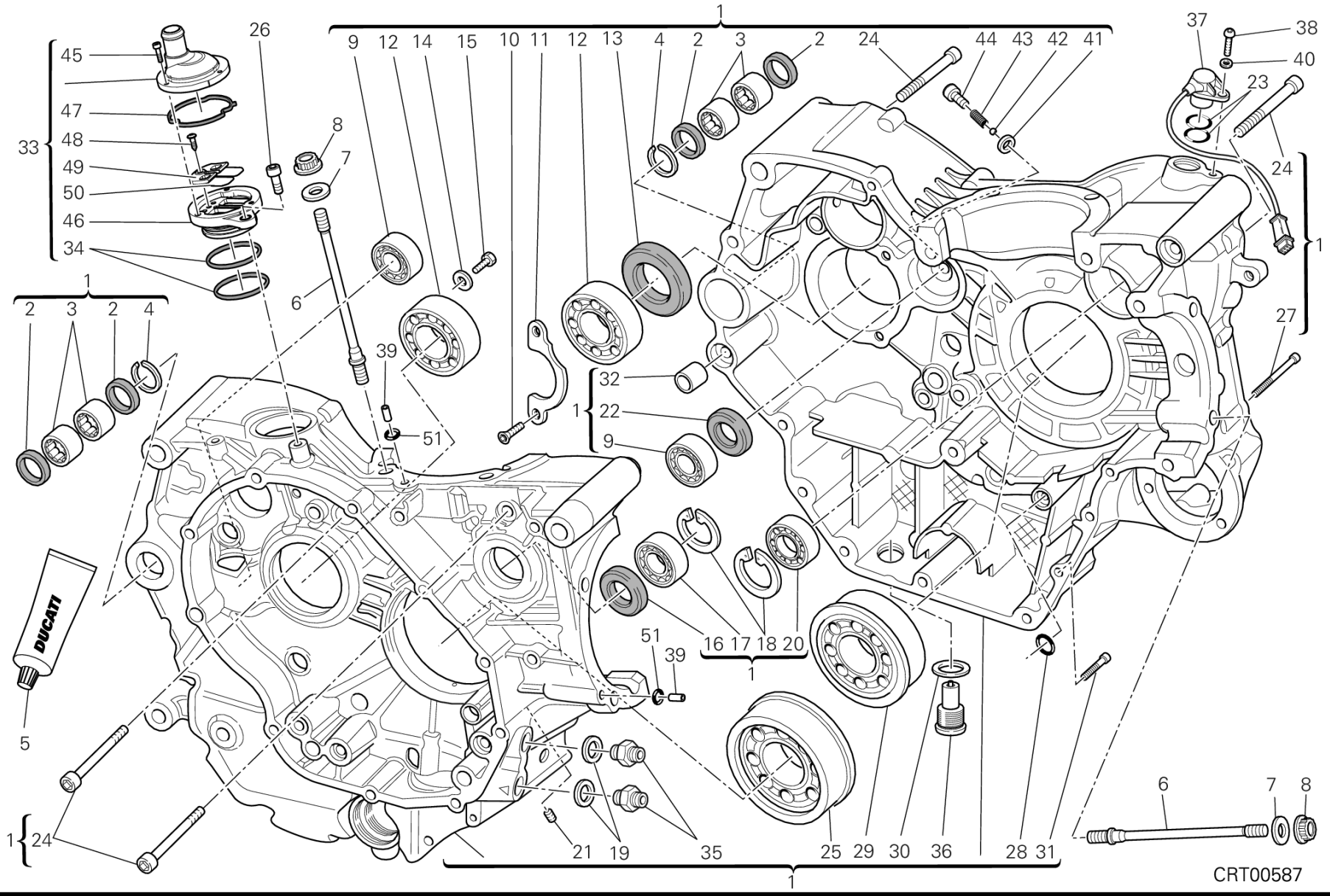
CRT00587

POS.	CODE	DESCRIPTION	QTY	START DATE	END DATE	VALIDITY	NOTES
35	81510221A	NIPPLE, HOSEM14X1.5	2	22/02/2012		DFR:N;MOD:M796 ABS;XST:AUS,EUR,JAP	
36	89320062A	PLUG, OIL DRAIN	1	22/02/2012		DFR:N;MOD:M796 ABS;XST:AUS,EUR,JAP	
37	55241321B	SENSOR, TIMING & RPM	1	22/02/2012		DFR:N;MOD:M796 ABS;XST:AUS,EUR,JAP	
38	77550211A	SCREW TBEI M6X16	1	22/02/2012		DFR:N;MOD:M796 ABS;XST:AUS,EUR,JAP	
39	71111281A	PIN DOWEL	2	22/02/2012		DFR:N;MOD:M796 ABS;XST:AUS,EUR,JAP	
40	85310031A	SPRING WASHER 6 MM	1	22/02/2012		DFR:N;MOD:M796 ABS;XST:AUS,EUR,JAP	
41	85212461A	WASHER, BRASS 6X13X2 MM	1	05/03/2012		DFR:N;MOD:M796 ABS;XST:AUS,EUR,JAP	
42	84740061A	BALL	1	22/02/2012		DFR:N;MOD:M796 ABS;XST:AUS,EUR,JAP	
43	79940121A	SPRING	1	22/02/2012		DFR:N;MOD:M796 ABS;XST:AUS,EUR,JAP	
44	77916501AE	SCREW, SPECIAL	1	05/03/2012		DFR:N;MOD:M796 ABS;XST:AUS,EUR,JAP	
45	77150068B	SCREW	3	07/12/2010		DFR:N;MOD:M796 ABS;XST:AUS,EUR,JAP	
46	59310601B	HOLDER READ VALVE	1	02/04/2010		DFR:N;MOD:M796 ABS;XST:AUS,EUR,JAP	
47	78811151A	GASKET	1	02/04/2010		DFR:N;MOD:M796 ABS;XST:AUS,EUR,JAP	
48	77250341B	SCREW, TAPPING 3.5X12	1	02/04/2010		DFR:N;MOD:M796 ABS;XST:AUS,EUR,JAP	
49	82716031A	SPACER	1	02/04/2010		DFR:N;MOD:M796 ABS;XST:AUS,EUR,JAP	
50	81110021A	REED VALVE ASSY	1	02/04/2010		DFR:N;MOD:M796 ABS;XST:AUS,EUR,JAP	
51	88641991A	O-RING	2	25/07/2012		DFR:N;MOD:M796 ABS;XST:AUS,EUR,JAP	

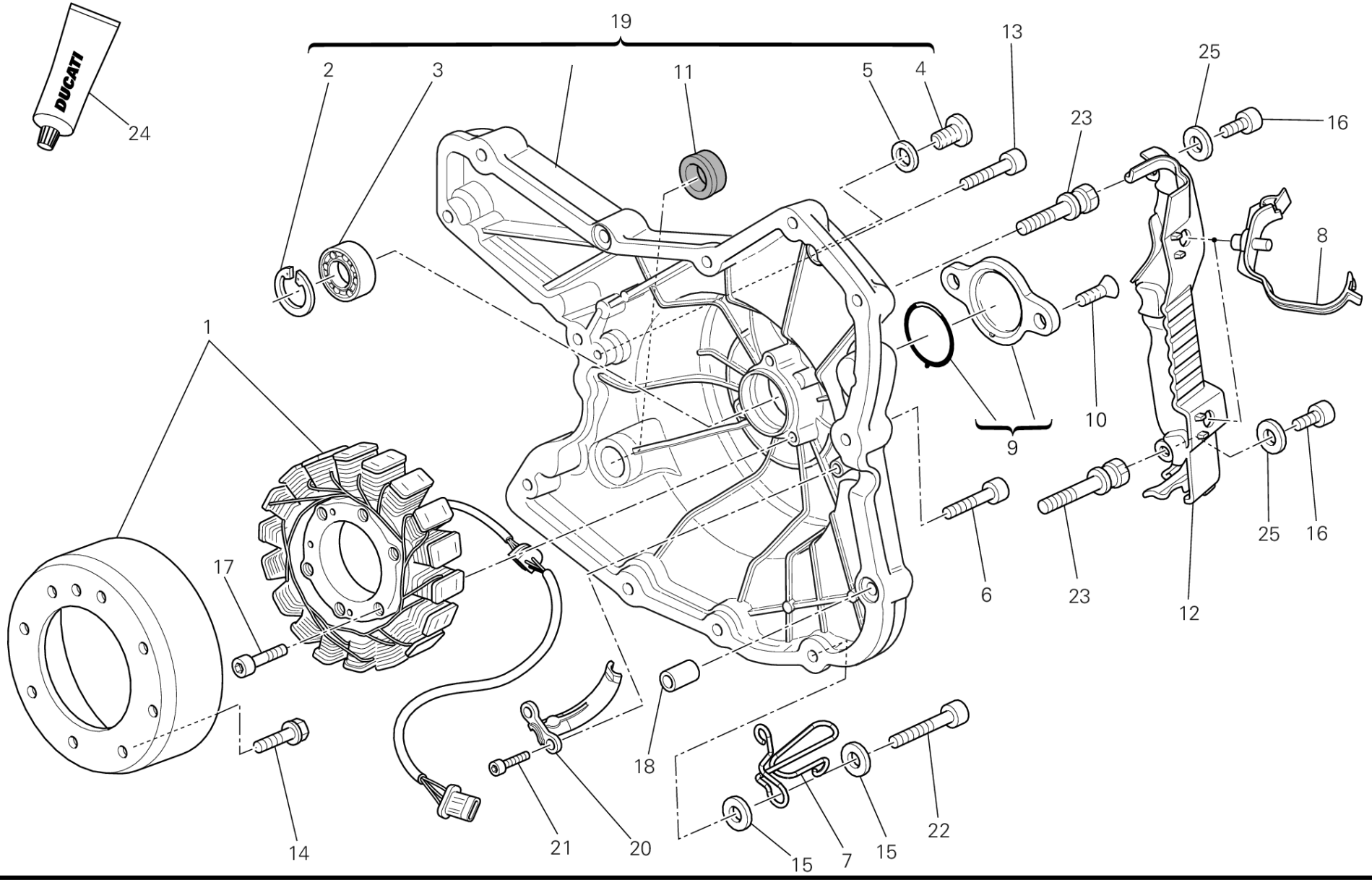
DUCATI
24
19
2
3
11
5
4
13
25
16
23
8
1
10
9
17
6
23
12
25
16
18
14
21
20
15
7
15
22

POS.	CODE	DESCRIPTION	QTY	START DATE	END DATE	VALIDITY	NOTES
1	26440143B	FLYWHEEL	1	15/03/2012		MOD:M796 ABS;XST:AUS,EUR,JAP	
2	735033380	CIRCLIP	1	29/02/2012		MOD:M796 ABS;XST:AUS,EUR,JAP	
3	70250081A	BALL BEARING 6003 TN9 C3	1	29/02/2012		MOD:M796 ABS;XST:AUS,EUR,JAP	
4	77910262A	SCREW M12X1	1	29/02/2012		MOD:M796 ABS;XST:AUS,EUR,JAP	
5	85250261A	GASKET, ALUMINIUM 12X16X1.5	1	29/02/2012		MOD:M796 ABS;XST:AUS,EUR,JAP	
6	77140697C	SCREW TCEIF M6X25	7	15/03/2012		MOD:M796 ABS;XST:AUS,EUR,JAP	
7	88110631A	HOSE GUIDE	1	15/03/2012		MOD:M796 ABS;XST:AUS,EUR,JAP	
8	75840201A	CLAMP, WIRE	2	23/02/2012		MOD:M796 ABS;XST:AUS,EUR,JAP	
9	69924531A	COVER KIT	1			MOD:M796 ABS;XST:AUS,EUR,JAP	
10	77750498C	SCREW TSPEI M6X14	2	15/03/2012		MOD:M796 ABS;XST:AUS,EUR,JAP	
11	937831524	SEAL, OIL 15X24X6	1	29/02/2012		MOD:M796 ABS;XST:AUS,EUR,JAP	
12	75810471C	COVER	1	23/02/2012		DFR:N;MOD:M796 ABS;XST:AUS,EUR,JAP	
13	77140677C	SCREW	2	15/03/2012		MOD:M796 ABS;XST:AUS,EUR,JAP	
14	77253330ZF	SCREW	8	02/05/2012		DFR:N;MOD:M796 ABS;XST:AUS,EUR,JAP	
15	85211761A	WASHER 6.4X12.5X1.6	2	15/03/2012		MOD:M796 ABS;XST:AUS,EUR,JAP	
16	77150398B	SCREW	2	23/02/2012		MOD:M796 ABS;XST:AUS,EUR,JAP	
17	77150738B	SCREW TCEI M6X40	3	29/02/2012		MOD:M796 ABS;XST:AUS,EUR,JAP	
18	71111601A	PIN DOWEL	2	15/03/2012		MOD:M796 ABS;XST:AUS,EUR,JAP	
19	24221023CD	GENERATOR COVER	1	27/02/2012		DFR:N;MOD:M796 ABS;XST:AUS,EUR,JAP	
20	83012841A	CLAMP, WIRE	1	29/02/2012		MOD:M796 ABS;XST:AUS,EUR,JAP	
21	77150408B	SCREW TCEI M5X14	2	29/02/2012		MOD:M796 ABS;XST:AUS,EUR,JAP	
22	77140717C	SCREW	2	15/03/2012		MOD:M796 ABS;XST:AUS,EUR,JAP	
23	77916311A	SCREW, SPECIAL	2	15/03/2012		MOD:M796 ABS;XST:AUS,EUR,JAP	
24	942470036	LIQUID GASKET	1			MOD:M796 ABS;XST:AUS,EUR,JAP	
25	85213081A	WASHER	2	23/02/2012		DFR:N;MOD:M796 ABS;XST:AUS,EUR,JAP	

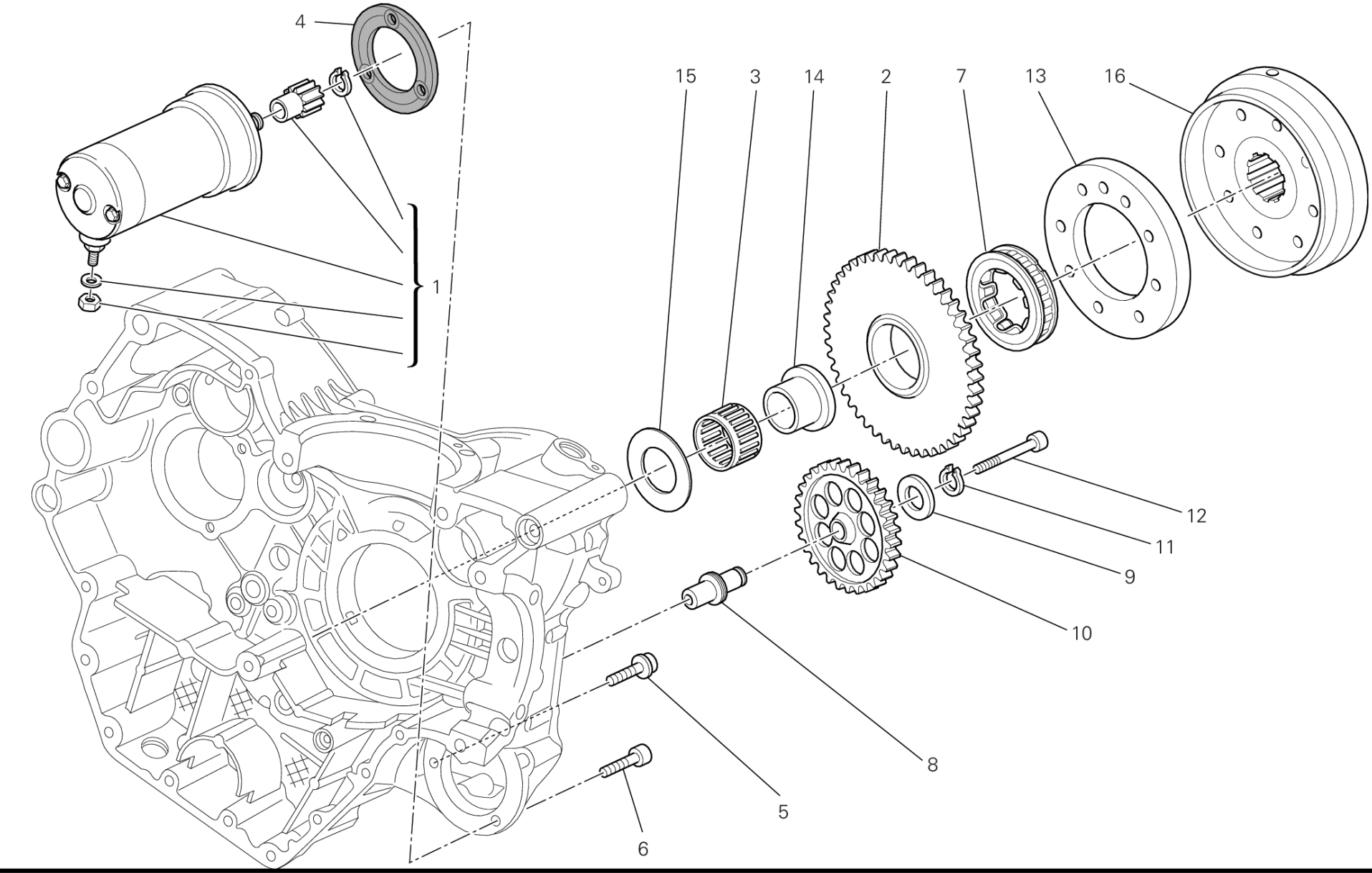
4
15
3
14
2
7
13
16
1
12
11
9
10
8
5
6

POS.	CODE	DESCRIPTION	QTY	START DATE	END DATE	VALIDITY	NOTES
1	27040115A	STARTING MOTOR	1	22/02/2012		DFR:N;MOD:M796 ABS;XST:AUS,EUR,JAP	
2	173Z0011A	ELECTRIC STARTER DRIVEN GEAR	1	22/02/2012		DFR:N;MOD:M796 ABS;XST:AUS,EUR,JAP	
3	70140031A	BEARING, NEEDLE	1	22/02/2012		DFR:N;MOD:M796 ABS;XST:AUS,EUR,JAP	
4	78810542A	ENGINE STARTER GASKET	1	22/02/2012		DFR:N;MOD:M796 ABS;XST:AUS,EUR,JAP	
5	77113861A	SCREW	2	22/02/2012		DFR:N;MOD:M796 ABS;XST:AUS,EUR,JAP	
6	77110518B	SCREW TCEI M6X25	1	22/02/2012		DFR:N;MOD:M796 ABS;XST:AUS,EUR,JAP	
7	70140411A	CLUTCH, ONE WAY	1	29/05/2012		DFR:N;MOD:M796 ABS;XST:AUS,EUR,JAP	
8	82112571B	STARTER REDUCTION SHAFT	1	22/02/2012		DFR:N;MOD:M796 ABS;XST:AUS,EUR,JAP	
9	85610711A	WASHER	1	22/02/2012		DFR:N;MOD:M796 ABS;XST:AUS,EUR,JAP	
10	176Z0011A	GEAR ASSY	1	22/02/2012		DFR:N;MOD:M796 ABS;XST:AUS,EUR,JAP	
11	735001440	CIRCLIP 14 DIN 471	1	22/02/2012		DFR:N;MOD:M796 ABS;XST:AUS,EUR,JAP	
12	77150788B	SCREW TCEI M6X65	1	22/02/2012		DFR:N;MOD:M796 ABS;XST:AUS,EUR,JAP	
13	16010571A	FLANGE STARTING CLUTCH	1	15/03/2010		DFR:N;MOD:M796 ABS;XST:AUS,EUR,JAP	
14	88110101C	BUSH	1	22/02/2012		DFR:N;MOD:M796 ABS;XST:AUS,EUR,JAP	
15	061950065	THRUST WASHER 35.5X48	1	22/02/2012		DFR:N;MOD:M796 ABS;XST:AUS,EUR,JAP	
16	276Z0021A	IGNITION FLYWHEEL	1	22/02/2012		DFR:N;MOD:M796 ABS;XST:AUS,EUR,JAP	

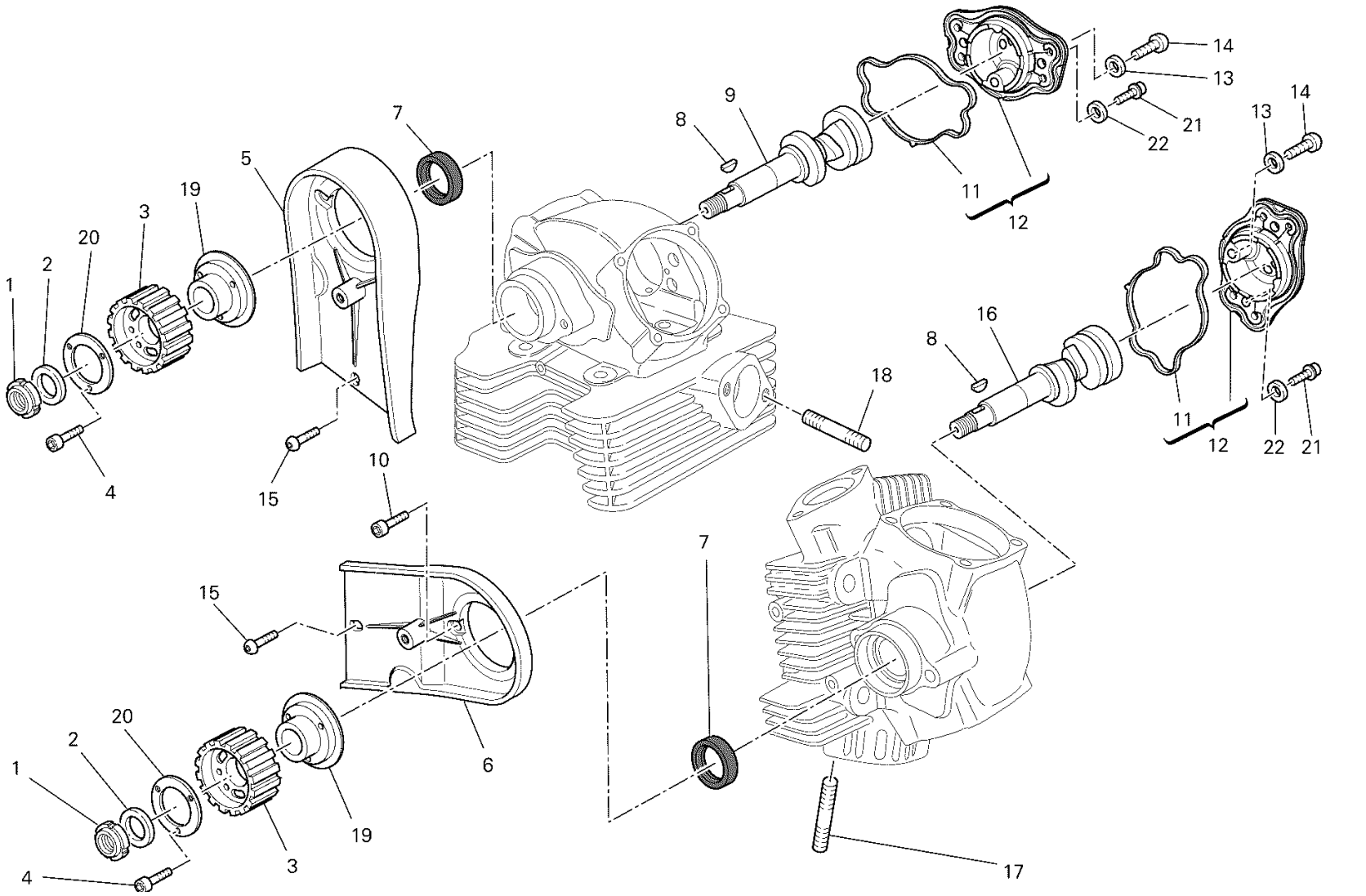

TST00442

POS.	CODE	DESCRIPTION	QTY	START DATE	END DATE	VALIDITY	NOTES
1	70350062A	ELASTIC-STOP RING NUT	2	17/11/2010		MOD:M796 ABS;XST:AUS,EUR,JAP	
2	85211731A	WASHER 15.2X24X1	2	17/11/2010		MOD:M796 ABS;XST:AUS,EUR,JAP	
3	25510243A	TIMING BELT PULLEY, DRIVEN T20	2	05/04/2011		MOD:M796 ABS;XST:AUS,EUR,JAP	
4	77950302A	SCREW TC M6X12	6	05/04/2011		MOD:M796 ABS;XST:AUS,EUR,JAP	
5	24510812A	VERTICAL BELT INTERNAL COVER	1	17/11/2010		MOD:M796 ABS;XST:AUS,EUR,JAP	
6	24510822A	HORIZONTAL BELT INTERNAL COVER	1	17/11/2010		MOD:M796 ABS;XST:AUS,EUR,JAP	
7	93040611A	OIL SEAL	2	17/11/2010		MOD:M796 ABS;XST:AUS,EUR,JAP	
8	68010131A	KEY, WOODRUFF 4X5X10	2	17/11/2010		MOD:M796 ABS;XST:AUS,EUR,JAP	
9	14813192A	VERTICAL HEAD CAMSHAFT	1	17/11/2010		DFR:N;MOD:M796 ABS;XST:AUS,EUR,JAP	
10	77110491A	SCREW TCEI M6X18	4	17/11/2010		MOD:M796 ABS;XST:AUS,EUR,JAP	
11	78811111C	GASKET	2	01/05/2010		MOD:M796 ABS;XST:AUS,EUR,JAP	
12	23520402AC	SIDE CAP	2	17/11/2010		MOD:M796 ABS;XST:AUS,EUR,JAP	
13	85212971A	COPPER GASKET	2	15/03/2012		MOD:M796 ABS;XST:AUS,EUR,JAP	
14	77510661A	SCREW	2	15/03/2012		MOD:M796 ABS;XST:AUS,EUR,JAP	
15	77550211A	SCREW TBEI M6X16	2	15/03/2012		MOD:M796 ABS;XST:AUS,EUR,JAP	
16	14813182A	HORIZONTAL HEAD CAMSHAFT	1	17/11/2010		DFR:N;MOD:M796 ABS;XST:AUS,EUR,JAP	
17	76640172A	STUD BOLT M8X30	4	17/11/2010		MOD:M796 ABS;XST:AUS,EUR,JAP	
18	76640181A	STUD BOLT M8X16	4	17/11/2010		MOD:M796 ABS;XST:AUS,EUR,JAP	
19	16011051A	RING, REAR PULLEY	2	05/04/2011		MOD:M796 ABS;XST:AUS,EUR,JAP	
20	85610743A	WASHER, SPECIAL	2	05/04/2011		MOD:M796 ABS;XST:AUS,EUR,JAP	
21	77113861A	SCREW	4	17/11/2010		MOD:M796 ABS;XST:AUS,EUR,JAP	
22	85212461A	WASHER, BRASS 6X13X2 MM	4	17/11/2010		MOD:M796 ABS;XST:AUS,EUR,JAP	

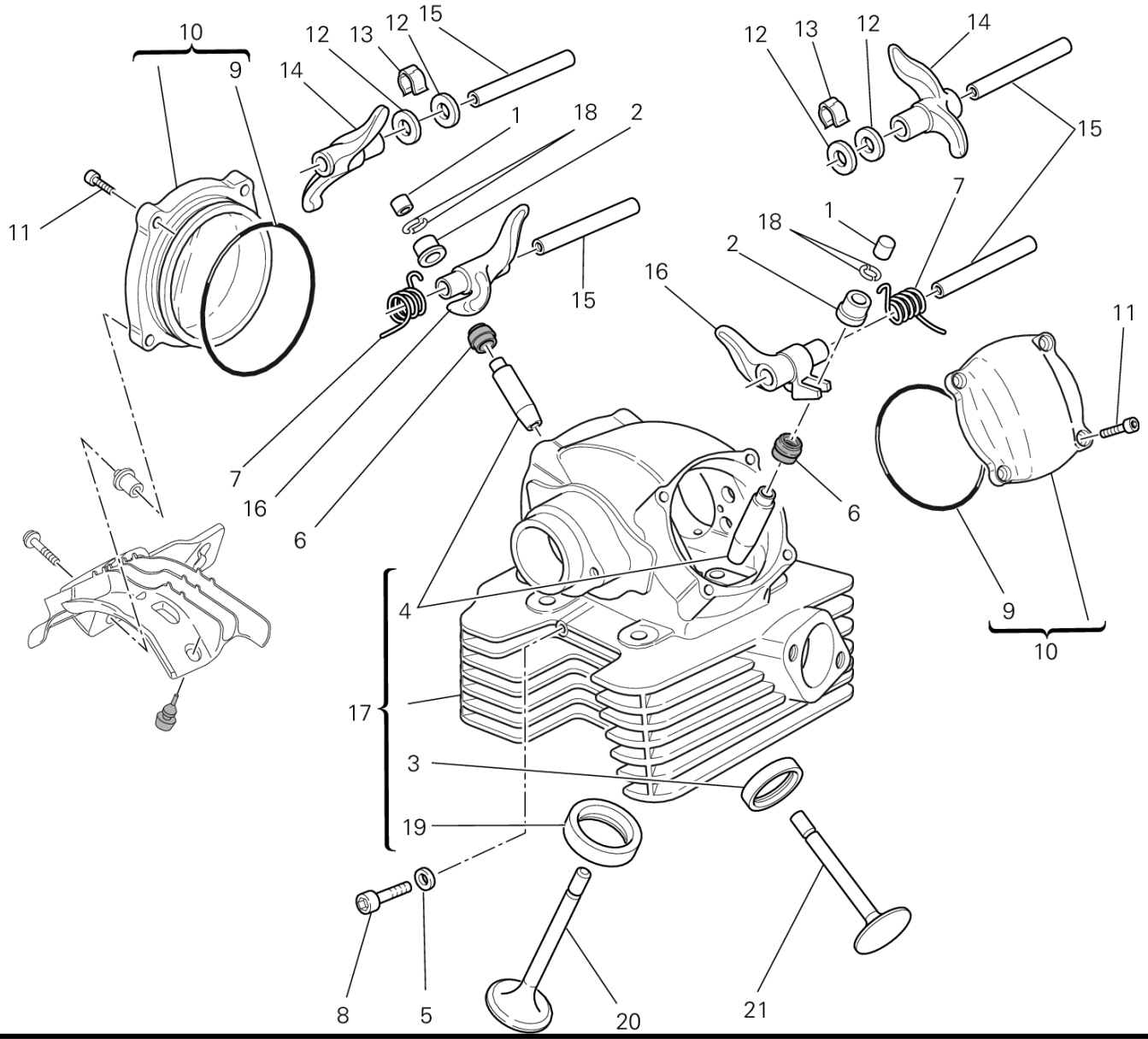
10
9
12
13
12
15
14
1
18
2
11
15
7
16
6
12
13
12
14
15
7
18
1
2
16
11
6
9
10
4
17
3
19
8
5
20
21

POS.	CODE	DESCRIPTION	QTY	START DATE	END DATE	VALIDITY	NOTES
1	84010011A	ADJUSTER, OPENING ROCKER ARM 2.00 MM	2			MOD:M796 ABS;XST:AUS,EUR,JAP	
	84010021A	ADJUSTER, OPENING ROCKER ARM 2.05 MM	2			MOD:M796 ABS;XST:AUS,EUR,JAP	
	84010031A	ADJUSTER, OPENING ROCKER ARM 2.10 MM	2			MOD:M796 ABS;XST:AUS,EUR,JAP	
	84010041A	ADJUSTER, OPENING ROCKER ARM 2.15 MM	2			MOD:M796 ABS;XST:AUS,EUR,JAP	
	84010051A	ADJUSTER, OPENING ROCKER ARM 2.20 MM	2			MOD:M796 ABS;XST:AUS,EUR,JAP	
	84010061A	ADJUSTER, OPENING ROCKER ARM 2.25 MM	2			MOD:M796 ABS;XST:AUS,EUR,JAP	
	84010071A	ADJUSTER, OPENING ROCKER ARM 2.30 MM	2			MOD:M796 ABS;XST:AUS,EUR,JAP	
	84010081A	ADJUSTER, OPENING ROCKER ARM 2.35 MM	2			MOD:M796 ABS;XST:AUS,EUR,JAP	
	84010091A	ADJUSTER, OPENING ROCKER ARM 2.40 MM	2			MOD:M796 ABS;XST:AUS,EUR,JAP	
	84010101A	ADJUSTER, OPENING ROCKER ARM 2.45 MM	2			MOD:M796 ABS;XST:AUS,EUR,JAP	
	84010111A	ADJUSTER, OPENING ROCKER ARM 2.50 MM	2			MOD:M796 ABS;XST:AUS,EUR,JAP	
	84010121A	ADJUSTER, OPENING ROCKER ARM 2.55 MM	2			MOD:M796 ABS;XST:AUS,EUR,JAP	
	84010131A	ADJUSTER, OPENING ROCKER ARM 2.60 MM	2			MOD:M796 ABS;XST:AUS,EUR,JAP	
	84010141A	ADJUSTER, OPENING ROCKER ARM 2.65 MM	2			MOD:M796 ABS;XST:AUS,EUR,JAP	
	84010151A	ADJUSTER, OPENING ROCKER ARM 2.70 MM	2			MOD:M796 ABS;XST:AUS,EUR,JAP	
	84010161A	ADJUSTER, OPENING ROCKER ARM 2.75 MM	2			MOD:M796 ABS;XST:AUS,EUR,JAP	
	84010171A	ADJUSTER, OPENING ROCKER ARM 2.80 MM	2			MOD:M796 ABS;XST:AUS,EUR,JAP	
	84010181A	ADJUSTER, OPENING ROCKER ARM 2.85 MM	2			MOD:M796 ABS;XST:AUS,EUR,JAP	
	84010191A	ADJUSTER, OPENING ROCKER ARM 2.90 MM	2			MOD:M796 ABS;XST:AUS,EUR,JAP	
	84010201A	ADJUSTER, OPENING ROCKER ARM 2.95 MM	2			MOD:M796 ABS;XST:AUS,EUR,JAP	
	84010211A	ADJUSTER, OPENING ROCKER ARM 3.00 MM	2			MOD:M796 ABS;XST:AUS,EUR,JAP	
	84010221A	ADJUSTER, OPENING ROCKER ARM 3.05 MM	2			MOD:M796 ABS;XST:AUS,EUR,JAP	
	84010231A	ADJUSTER, OPENING ROCKER ARM 3.10 MM	2			MOD:M796 ABS;XST:AUS,EUR,JAP	
	84010241A	ADJUSTER, OPENING ROCKER ARM 3.15 MM	2			MOD:M796 ABS;XST:AUS,EUR,JAP	
	84010251A	ADJUSTER, OPENING ROCKER ARM 3.20 MM	2			MOD:M796 ABS;XST:AUS,EUR,JAP	
	84010261A	ADJUSTER, OPENING ROCKER ARM 3.25 MM	2			MOD:M796 ABS;XST:AUS,EUR,JAP	
	84010271A	ADJUSTER, OPENING ROCKER ARM 3.30 MM	2			MOD:M796 ABS;XST:AUS,EUR,JAP	
	84010281A	ADJUSTER, OPENING ROCKER ARM 3.35 MM	2			MOD:M796 ABS;XST:AUS,EUR,JAP	
	84010291A	ADJUSTER, OPENING ROCKER ARM 3.40 MM	2			MOD:M796 ABS;XST:AUS,EUR,JAP	
	84010301A	ADJUSTER, OPENING ROCKER ARM 3.45 MM	2			MOD:M796 ABS;XST:AUS,EUR,JAP	
	84010311A	ADJUSTER, OPENING ROCKER ARM 1.80 MM	2			MOD:M796 ABS;XST:AUS,EUR,JAP	
	84010321A	ADJUSTER, OPENING ROCKER ARM 1.85 MM	2			MOD:M796 ABS;XST:AUS,EUR,JAP	
	84010331A	ADJUSTER, OPENING ROCKER ARM 1.90 MM	2			MOD:M796 ABS;XST:AUS,EUR,JAP	
	84010341A	ADJUSTER, OPENING ROCKER ARM 1.95 MM	2			MOD:M796 ABS;XST:AUS,EUR,JAP	
2	84010412B	ADJUSTER, CLOSING ROCKER ARM 2.20 MM	2			MOD:M796 ABS;XST:AUS,EUR,JAP	

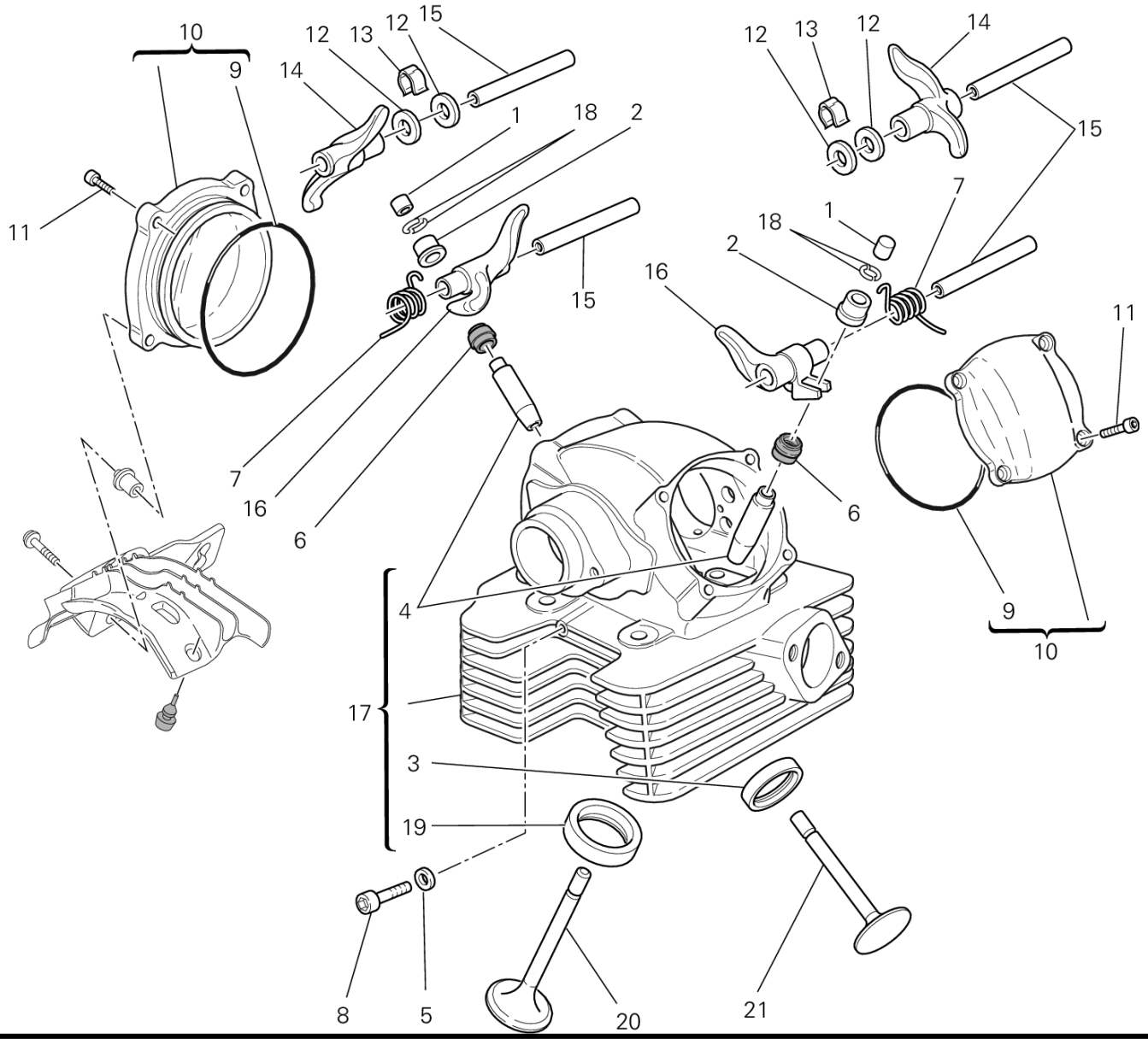
10
9
12
13
12
15
14
1
18
2
11
15
7
16
6
12
13
12
14
15
7
18
1
2
16
11
6
9
10
4
17
3
19
8
5
20
21

POS.	CODE	DESCRIPTION	QTY	START DATE	END DATE	VALIDITY	NOTES
	84010422B	ADJUSTER, CLOSING ROCKER ARM 2.25 MM	2			MOD:M796 ABS;XST:AUS,EUR,JAP	
	84010432B	ADJUSTER, CLOSING ROCKER ARM 2.30 MM	2			MOD:M796 ABS;XST:AUS,EUR,JAP	
	84010442B	ADJUSTER, CLOSING ROCKER ARM 2.35 MM	2			MOD:M796 ABS;XST:AUS,EUR,JAP	
	84010452B	ADJUSTER, CLOSING ROCKER ARM 2.40 MM	2			MOD:M796 ABS;XST:AUS,EUR,JAP	
	84010462B	ADJUSTER, CLOSING ROCKER ARM 2.45 MM	2			MOD:M796 ABS;XST:AUS,EUR,JAP	
	84010472B	ADJUSTER, CLOSING ROCKER ARM 2.50 MM	2			MOD:M796 ABS;XST:AUS,EUR,JAP	
	84010482B	ADJUSTER, CLOSING ROCKER ARM 2.55 MM	2			MOD:M796 ABS;XST:AUS,EUR,JAP	
	84010492B	ADJUSTER, CLOSING ROCKER ARM 2.60 MM	2			MOD:M796 ABS;XST:AUS,EUR,JAP	
	84010502B	ADJUSTER, CLOSING ROCKER ARM 2.65 MM	2			MOD:M796 ABS;XST:AUS,EUR,JAP	
	84010512B	ADJUSTER, CLOSING ROCKER ARM 2.70 MM	2			MOD:M796 ABS;XST:AUS,EUR,JAP	
	84010522B	ADJUSTER, CLOSING ROCKER ARM 2.75 MM	2			MOD:M796 ABS;XST:AUS,EUR,JAP	
	84010532B	ADJUSTER, CLOSING ROCKER ARM 2.80 MM	2			MOD:M796 ABS;XST:AUS,EUR,JAP	
	84010542B	ADJUSTER, CLOSING ROCKER ARM 2.85 MM	2			MOD:M796 ABS;XST:AUS,EUR,JAP	
	84010552B	ADJUSTER, CLOSING ROCKER ARM 2.90 MM	2			MOD:M796 ABS;XST:AUS,EUR,JAP	
	84010562B	ADJUSTER, CLOSING ROCKER ARM 2.95 MM	2			MOD:M796 ABS;XST:AUS,EUR,JAP	
	84010572B	ADJUSTER, CLOSING ROCKER ARM 3.00 MM	2			MOD:M796 ABS;XST:AUS,EUR,JAP	
	84010582B	ADJUSTER, CLOSING ROCKER ARM 3.05 MM	2			MOD:M796 ABS;XST:AUS,EUR,JAP	
	84010592B	ADJUSTER, CLOSING ROCKER ARM 3.10 MM	2			MOD:M796 ABS;XST:AUS,EUR,JAP	
	84010602B	ADJUSTER, CLOSING ROCKER ARM 3.15 MM	2			MOD:M796 ABS;XST:AUS,EUR,JAP	
	84010612B	ADJUSTER, CLOSING ROCKER ARM 3.20 MM	2			MOD:M796 ABS;XST:AUS,EUR,JAP	
	84010622B	ADJUSTER, CLOSING ROCKER ARM 3.25 MM	2			MOD:M796 ABS;XST:AUS,EUR,JAP	
	84010632B	ADJUSTER, CLOSING ROCKER ARM 3.30 MM	2			MOD:M796 ABS;XST:AUS,EUR,JAP	
	84010642B	ADJUSTER, CLOSING ROCKER ARM 3.35 MM	2			MOD:M796 ABS;XST:AUS,EUR,JAP	
	84010652B	ADJUSTER, CLOSING ROCKER ARM 3.40 MM	2			MOD:M796 ABS;XST:AUS,EUR,JAP	
	84010662B	ADJUSTER, CLOSING ROCKER ARM 3.45 MM	2			MOD:M796 ABS;XST:AUS,EUR,JAP	
	84010672B	ADJUSTER, CLOSING ROCKER ARM 3.50 MM	2			MOD:M796 ABS;XST:AUS,EUR,JAP	
	84010682B	ADJUSTER, CLOSING ROCKER ARM 3.55 MM	2			MOD:M796 ABS;XST:AUS,EUR,JAP	
	84010692B	ADJUSTER, CLOSING ROCKER ARM 3.60 MM	2			MOD:M796 ABS;XST:AUS,EUR,JAP	
	84010702B	ADJUSTER, CLOSING ROCKER ARM 3.65 MM	2			MOD:M796 ABS;XST:AUS,EUR,JAP	
	84010712B	ADJUSTER, CLOSING ROCKER ARM 3.70 MM	2			MOD:M796 ABS;XST:AUS,EUR,JAP	
	84010722B	ADJUSTER, CLOSING ROCKER ARM 3.75 MM	2			MOD:M796 ABS;XST:AUS,EUR,JAP	
	84010732B	ADJUSTER, CLOSING ROCKER ARM 3.80 MM	2			MOD:M796 ABS;XST:AUS,EUR,JAP	
	84010742B	ADJUSTER, CLOSING ROCKER ARM 3.85 MM	2			MOD:M796 ABS;XST:AUS,EUR,JAP	
	84010752B	ADJUSTER, CLOSING ROCKER ARM 3.90 MM	2			MOD:M796 ABS;XST:AUS,EUR,JAP	
	84010762B	ADJUSTER, CLOSING ROCKER ARM 3.95 MM	2			MOD:M796 ABS;XST:AUS,EUR,JAP	

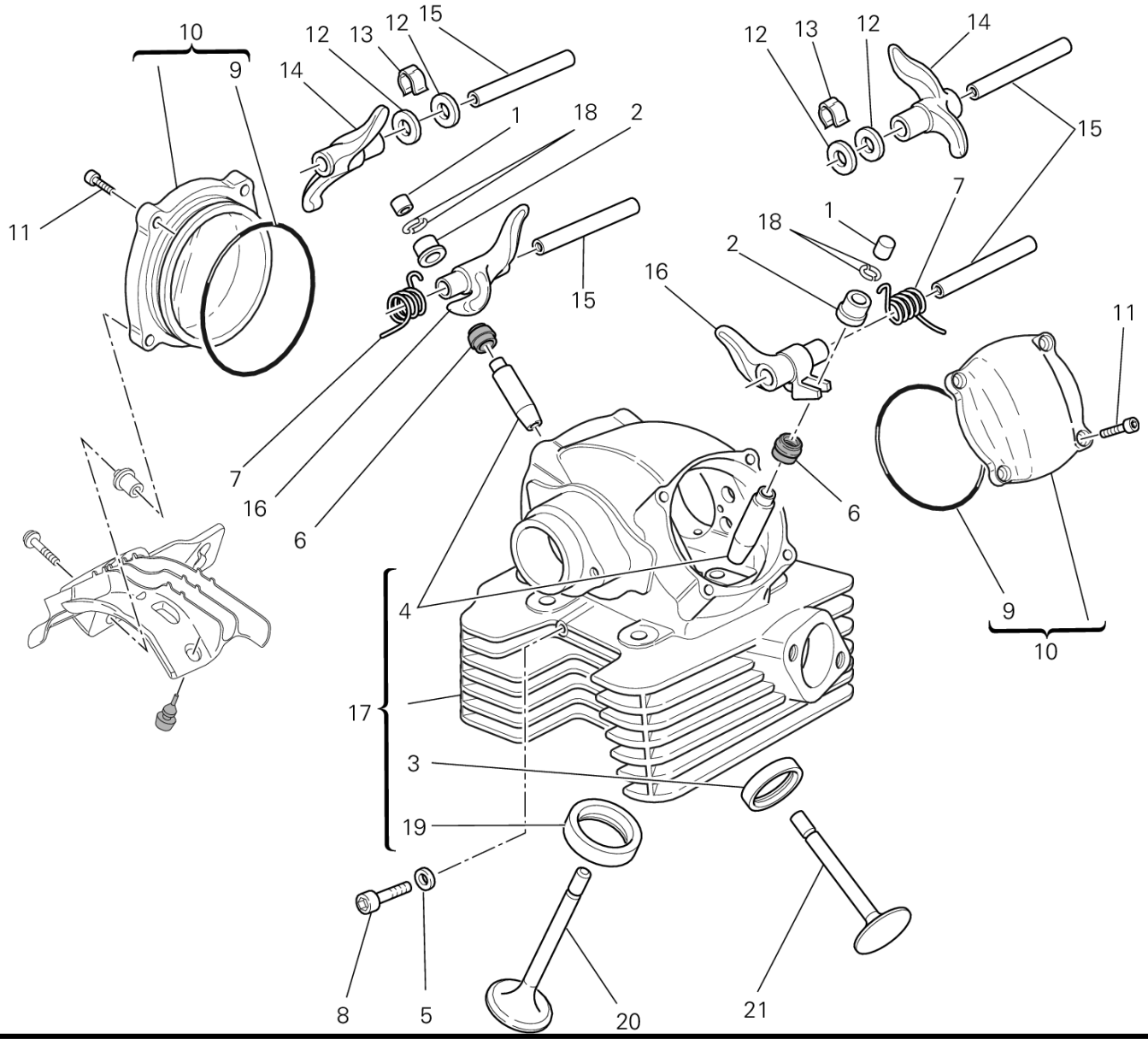
10
9
12
13
12
15
14
1
18
2
11
15
7
16
6
12
13
12
14
15
7
18
1
2
16
11
6
9
10
4
17
3
19
8
5
20
21

POS.	CODE	DESCRIPTION	QTY	START DATE	END DATE	VALIDITY	NOTES
	84010772B	ADJUSTER, CLOSING ROCKER ARM 4.00 MM	2			MOD:M796 ABS;XST:AUS,EUR,JAP	
	84010782B	ADJUSTER, CLOSING ROCKER ARM 4.05 MM	2			MOD:M796 ABS;XST:AUS,EUR,JAP	
	84010792B	ADJUSTER, CLOSING ROCKER ARM 4.10 MM	2			MOD:M796 ABS;XST:AUS,EUR,JAP	
	84010802B	ADJUSTER, CLOSING ROCKER ARM 4.15 MM	2			MOD:M796 ABS;XST:AUS,EUR,JAP	
	84010812B	ADJUSTER, CLOSING ROCKER ARM 4.20 MM	2			MOD:M796 ABS;XST:AUS,EUR,JAP	
	84010822B	ADJUSTER, CLOSING ROCKER ARM 4.25 MM	2			MOD:M796 ABS;XST:AUS,EUR,JAP	
	84010832B	ADJUSTER, CLOSING ROCKER ARM 4.30 MM	2			MOD:M796 ABS;XST:AUS,EUR,JAP	
	84010842B	ADJUSTER, CLOSING ROCKER ARM 4.35 MM	2			MOD:M796 ABS;XST:AUS,EUR,JAP	
	84010852B	ADJUSTER, CLOSING ROCKER ARM 4.40 MM	2			MOD:M796 ABS;XST:AUS,EUR,JAP	
	84010862B	ADJUSTER, CLOSING ROCKER ARM 4.45 MM	2			MOD:M796 ABS;XST:AUS,EUR,JAP	
	84010872B	ADJUSTER, CLOSING ROCKER ARM 4.50 MM	2			MOD:M796 ABS;XST:AUS,EUR,JAP	
3	30410911A	SEAT, EXHAUST VALVE	1	24/12/2009		DFR:N;MOD:M796 ABS;XST:AUS,EUR,JAP	
	30410911AB	SEAT, EXHAUST VALVE +0.03 MM	1	22/02/2012		DFR:N;MOD:M796 ABS;XST:AUS,EUR,JAP	
	30410911AC	SEAT, EXHAUST VALVE +0.06 MM	1	22/02/2012		DFR:N;MOD:M796 ABS;XST:AUS,EUR,JAP	
4	30310681AA	GUIDE, VALVE +0.03 MM	2	22/02/2012		DFR:N;MOD:M796 ABS;XST:AUS,EUR,JAP	
	30310681AB	GUIDE, VALVE +0.06 MM	2	22/02/2012		DFR:N;MOD:M796 ABS;XST:AUS,EUR,JAP	
	30310681AC	GUIDE, VALVE +0.09 MM	2	22/02/2012		DFR:N;MOD:M796 ABS;XST:AUS,EUR,JAP	
5	85250231A	GASKET	1	24/12/2009		DFR:N;MOD:M796 ABS;XST:AUS,EUR,JAP	
6	76410871A	SEAL VALVE STEM	2	17/11/2010		DFR:N;MOD:M796 ABS;XST:AUS,EUR,JAP	
7	79915021A	SPRING, CLOSING ROCKER ARM	2	17/11/2010		DFR:N;MOD:M796 ABS;XST:AUS,EUR,JAP	
8	77911331A	SCREW, SPECIAL TCEI M6X12	1	24/12/2009		DFR:N;MOD:M796 ABS;XST:AUS,EUR,JAP	
9	88641381A	O-RING 63.13X2.62	2	24/12/2009		DFR:N;MOD:M796 ABS;XST:AUS,EUR,JAP	
10	24020392A	VALVE COVER	2	17/11/2010		DFR:N;MOD:M796 ABS;XST:AUS,EUR,JAP	

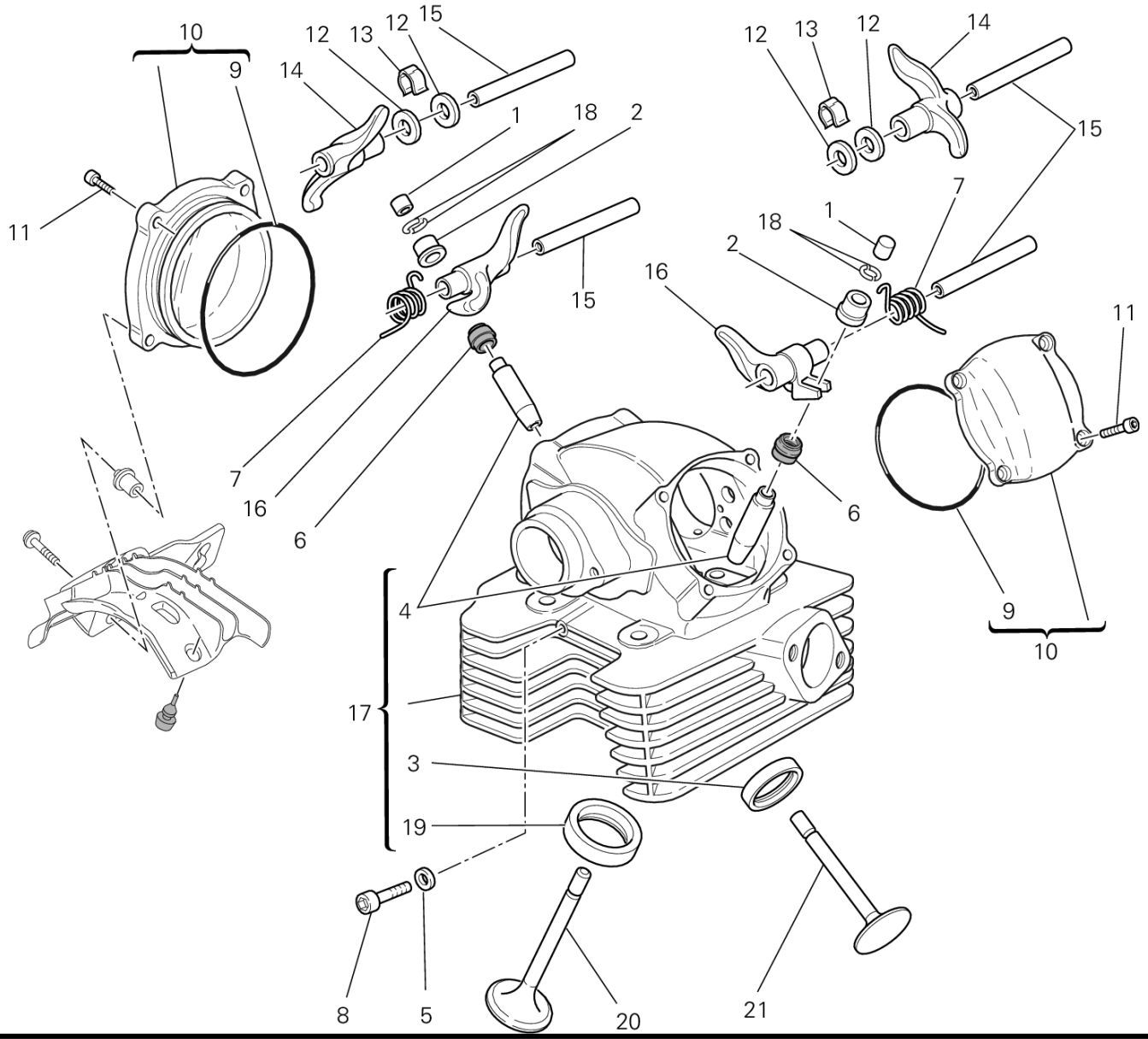
10
9
12
13
12
15
14
1
18
2
11
15
7
16
6
12
13
12
14
15
7
18
1
2
16
11
6
4
9
10
17
3
19
8
5
20
21

POS.	CODE	DESCRIPTION	QTY	START DATE	END DATE	VALIDITY	NOTES
11	77150668B	SCREW TCEI M6X18	6	17/11/2010		DFR:N;MOD:M796 ABS;XST:AUS,EUR,JAP	
12	064770010	WASHER, THRUST	4	17/11/2010		DFR:N;MOD:M796 ABS;XST:AUS,EUR,JAP	
13	79912121A	SPRING, ROCKER ARM AXLE	2	17/11/2010		DFR:N;MOD:M796 ABS;XST:AUS,EUR,JAP	
14	208Z0011A	OPEN. ROCKER ARM	2	17/11/2010		DFR:N;MOD:M796 ABS;XST:AUS,EUR,JAP	
15	821Z0011B	ROCKER ARM PIN	4	17/11/2010		DFR:N;MOD:M796 ABS;XST:AUS,EUR,JAP	
16	209Z0011A	CLOSE ROCKER ARM	2	17/11/2010		DFR:N;MOD:M796 ABS;XST:AUS,EUR,JAP	
17	30122871AA	COMPLETE VERTICAL HEAD	1	17/11/2010		DFR:N;MOD:M796 ABS;XST:AUS,EUR,JAP	
18	66910011E	C RING	4	17/11/2010		DFR:N;MOD:M796 ABS;XST:AUS,EUR,JAP	
19	30410901A	SEAT, INTAKE VALVE	1	24/12/2009		DFR:N;MOD:M796 ABS;XST:AUS,EUR,JAP	
	30410901AB	SEAT, INLET VALVE +0.03 MM	1	22/02/2012		DFR:N;MOD:M796 ABS;XST:AUS,EUR,JAP	
	30410901AC	SEAT, INLET VALVE +0.06 MM	1	22/02/2012		DFR:N;MOD:M796 ABS;XST:AUS,EUR,JAP	
20	21010752B	INTAKE VALVE	1	17/11/2010		DFR:N;MOD:M796 ABS;XST:AUS,EUR,JAP	
21	21110752C	EXHAUST VALVE	1	17/11/2010		DFR:N;MOD:M796 ABS;XST:AUS,EUR,JAP	

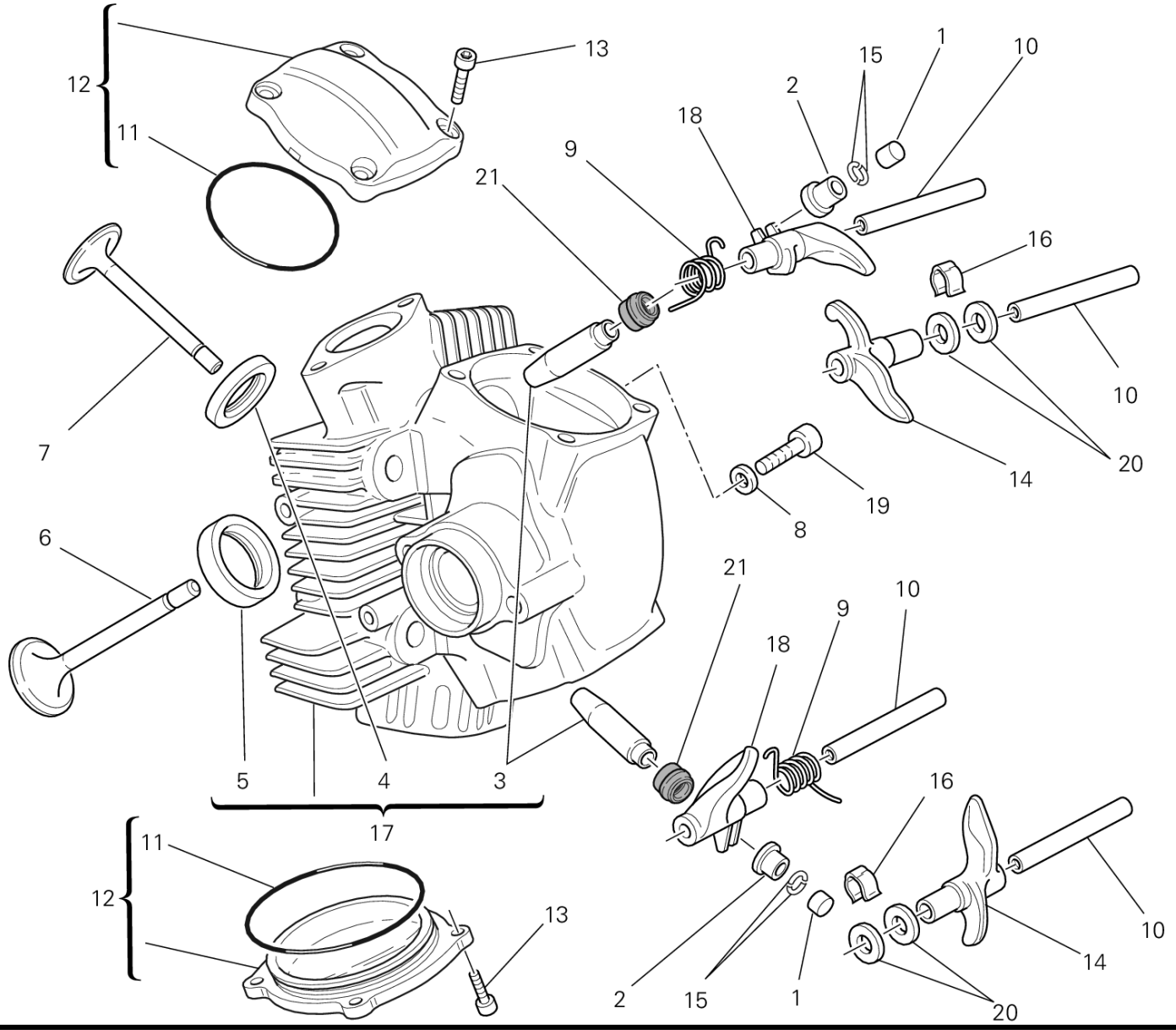
12
11
13
15
1
10
2
18
9
21
16
10
20
14
19
8
7
6
5
4
3
17
21
9
10
18
16
10
14
20
2
15
1
12
11
13

POS.	CODE	DESCRIPTION	QTY	START DATE	END DATE	VALIDITY	NOTES
1	84010011A	ADJUSTER, OPENING ROCKER ARM 2.00 MM	2			MOD:M796 ABS;XST:AUS,EUR,JAP	
	84010021A	ADJUSTER, OPENING ROCKER ARM 2.05 MM	2			MOD:M796 ABS;XST:AUS,EUR,JAP	
	84010031A	ADJUSTER, OPENING ROCKER ARM 2.10 MM	2			MOD:M796 ABS;XST:AUS,EUR,JAP	
	84010041A	ADJUSTER, OPENING ROCKER ARM 2.15 MM	2			MOD:M796 ABS;XST:AUS,EUR,JAP	
	84010051A	ADJUSTER, OPENING ROCKER ARM 2.20 MM	2			MOD:M796 ABS;XST:AUS,EUR,JAP	
	84010061A	ADJUSTER, OPENING ROCKER ARM 2.25 MM	2			MOD:M796 ABS;XST:AUS,EUR,JAP	
	84010071A	ADJUSTER, OPENING ROCKER ARM 2.30 MM	2			MOD:M796 ABS;XST:AUS,EUR,JAP	
	84010081A	ADJUSTER, OPENING ROCKER ARM 2.35 MM	2			MOD:M796 ABS;XST:AUS,EUR,JAP	
	84010091A	ADJUSTER, OPENING ROCKER ARM 2.40 MM	2			MOD:M796 ABS;XST:AUS,EUR,JAP	
	84010101A	ADJUSTER, OPENING ROCKER ARM 2.45 MM	2			MOD:M796 ABS;XST:AUS,EUR,JAP	
	84010111A	ADJUSTER, OPENING ROCKER ARM 2.50 MM	2			MOD:M796 ABS;XST:AUS,EUR,JAP	
	84010121A	ADJUSTER, OPENING ROCKER ARM 2.55 MM	2			MOD:M796 ABS;XST:AUS,EUR,JAP	
	84010131A	ADJUSTER, OPENING ROCKER ARM 2.60 MM	2			MOD:M796 ABS;XST:AUS,EUR,JAP	
	84010141A	ADJUSTER, OPENING ROCKER ARM 2.65 MM	2			MOD:M796 ABS;XST:AUS,EUR,JAP	
	84010151A	ADJUSTER, OPENING ROCKER ARM 2.70 MM	2			MOD:M796 ABS;XST:AUS,EUR,JAP	
	84010161A	ADJUSTER, OPENING ROCKER ARM 2.75 MM	2			MOD:M796 ABS;XST:AUS,EUR,JAP	
	84010171A	ADJUSTER, OPENING ROCKER ARM 2.80 MM	2			MOD:M796 ABS;XST:AUS,EUR,JAP	
	84010181A	ADJUSTER, OPENING ROCKER ARM 2.85 MM	2			MOD:M796 ABS;XST:AUS,EUR,JAP	
	84010191A	ADJUSTER, OPENING ROCKER ARM 2.90 MM	2			MOD:M796 ABS;XST:AUS,EUR,JAP	
	84010201A	ADJUSTER, OPENING ROCKER ARM 2.95 MM	2			MOD:M796 ABS;XST:AUS,EUR,JAP	
	84010211A	ADJUSTER, OPENING ROCKER ARM 3.00 MM	2			MOD:M796 ABS;XST:AUS,EUR,JAP	
	84010221A	ADJUSTER, OPENING ROCKER ARM 3.05 MM	2			MOD:M796 ABS;XST:AUS,EUR,JAP	
	84010231A	ADJUSTER, OPENING ROCKER ARM 3.10 MM	2			MOD:M796 ABS;XST:AUS,EUR,JAP	
	84010241A	ADJUSTER, OPENING ROCKER ARM 3.15 MM	2			MOD:M796 ABS;XST:AUS,EUR,JAP	
	84010251A	ADJUSTER, OPENING ROCKER ARM 3.20 MM	2			MOD:M796 ABS;XST:AUS,EUR,JAP	
	84010261A	ADJUSTER, OPENING ROCKER ARM 3.25 MM	2			MOD:M796 ABS;XST:AUS,EUR,JAP	
	84010271A	ADJUSTER, OPENING ROCKER ARM 3.30 MM	2			MOD:M796 ABS;XST:AUS,EUR,JAP	
	84010281A	ADJUSTER, OPENING ROCKER ARM 3.35 MM	2			MOD:M796 ABS;XST:AUS,EUR,JAP	
	84010291A	ADJUSTER, OPENING ROCKER ARM 3.40 MM	2			MOD:M796 ABS;XST:AUS,EUR,JAP	
	84010301A	ADJUSTER, OPENING ROCKER ARM 3.45 MM	2			MOD:M796 ABS;XST:AUS,EUR,JAP	
	84010311A	ADJUSTER, OPENING ROCKER ARM 1.80 MM	2			MOD:M796 ABS;XST:AUS,EUR,JAP	
	84010321A	ADJUSTER, OPENING ROCKER ARM 1.85 MM	2			MOD:M796 ABS;XST:AUS,EUR,JAP	
	84010331A	ADJUSTER, OPENING ROCKER ARM 1.90 MM	2			MOD:M796 ABS;XST:AUS,EUR,JAP	
	84010341A	ADJUSTER, OPENING ROCKER ARM 1.95 MM	2			MOD:M796 ABS;XST:AUS,EUR,JAP	
2	84010412B	ADJUSTER, CLOSING ROCKER ARM 2.20 MM	2			MOD:M796 ABS;XST:AUS,EUR,JAP	

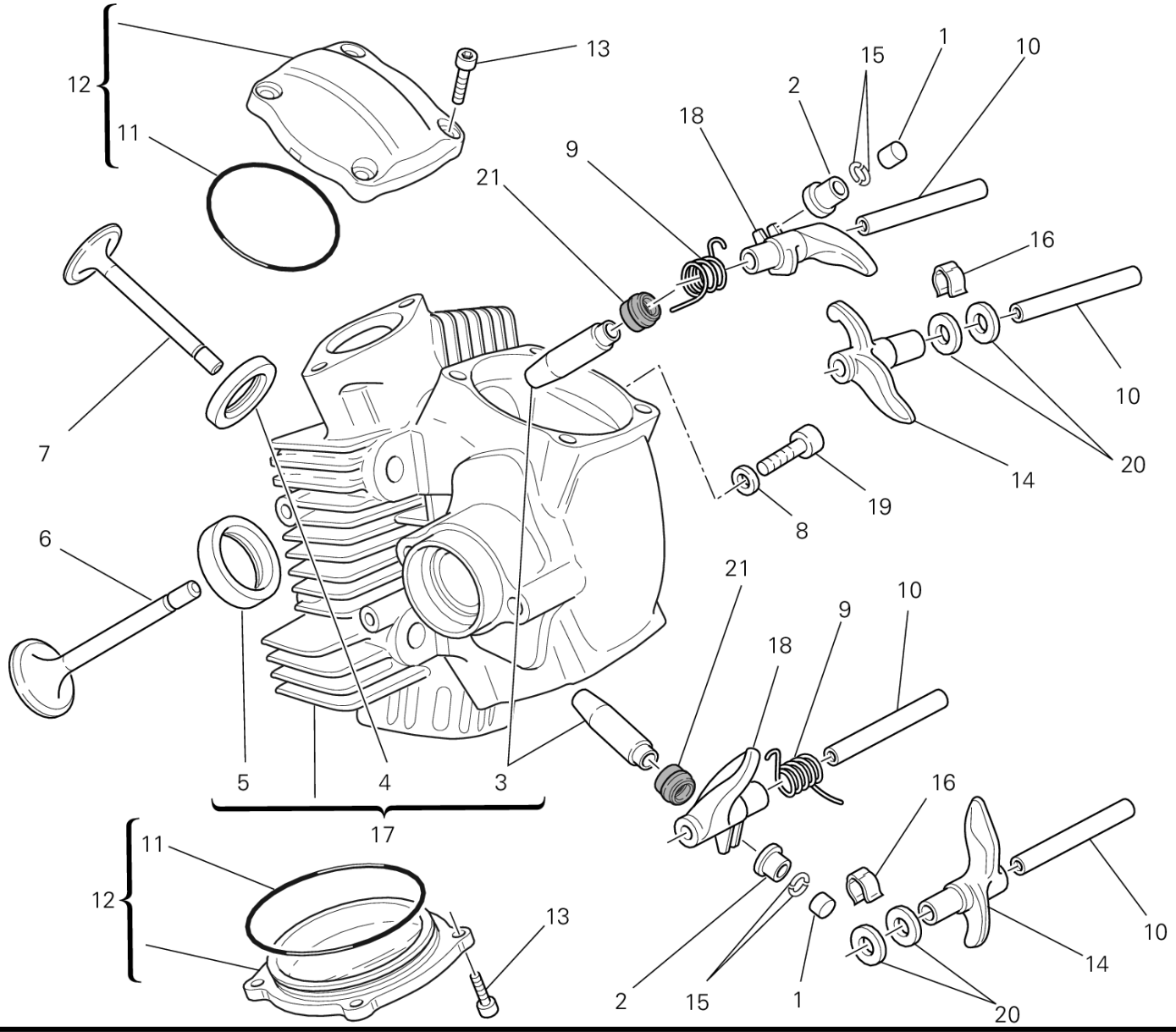
12
11
13
15
1
10
2
18
9
21
16
10
20
14
19
8
7
6
5
4
3
17
21
9
10
18
16
10
14
20
2
15
1
12
11
13

POS.	CODE	DESCRIPTION	QTY	START DATE	END DATE	VALIDITY	NOTES
	84010422B	ADJUSTER, CLOSING ROCKER ARM 2.25 MM	2			MOD:M796 ABS;XST:AUS,EUR,JAP	
	84010432B	ADJUSTER, CLOSING ROCKER ARM 2.30 MM	2			MOD:M796 ABS;XST:AUS,EUR,JAP	
	84010442B	ADJUSTER, CLOSING ROCKER ARM 2.35 MM	2			MOD:M796 ABS;XST:AUS,EUR,JAP	
	84010452B	ADJUSTER, CLOSING ROCKER ARM 2.40 MM	2			MOD:M796 ABS;XST:AUS,EUR,JAP	
	84010462B	ADJUSTER, CLOSING ROCKER ARM 2.45 MM	2			MOD:M796 ABS;XST:AUS,EUR,JAP	
	84010472B	ADJUSTER, CLOSING ROCKER ARM 2.50 MM	2			MOD:M796 ABS;XST:AUS,EUR,JAP	
	84010482B	ADJUSTER, CLOSING ROCKER ARM 2.55 MM	2			MOD:M796 ABS;XST:AUS,EUR,JAP	
	84010492B	ADJUSTER, CLOSING ROCKER ARM 2.60 MM	2			MOD:M796 ABS;XST:AUS,EUR,JAP	
	84010502B	ADJUSTER, CLOSING ROCKER ARM 2.65 MM	2			MOD:M796 ABS;XST:AUS,EUR,JAP	
	84010512B	ADJUSTER, CLOSING ROCKER ARM 2.70 MM	2			MOD:M796 ABS;XST:AUS,EUR,JAP	
	84010522B	ADJUSTER, CLOSING ROCKER ARM 2.75 MM	2			MOD:M796 ABS;XST:AUS,EUR,JAP	
	84010532B	ADJUSTER, CLOSING ROCKER ARM 2.80 MM	2			MOD:M796 ABS;XST:AUS,EUR,JAP	
	84010542B	ADJUSTER, CLOSING ROCKER ARM 2.85 MM	2			MOD:M796 ABS;XST:AUS,EUR,JAP	
	84010552B	ADJUSTER, CLOSING ROCKER ARM 2.90 MM	2			MOD:M796 ABS;XST:AUS,EUR,JAP	
	84010562B	ADJUSTER, CLOSING ROCKER ARM 2.95 MM	2			MOD:M796 ABS;XST:AUS,EUR,JAP	
	84010572B	ADJUSTER, CLOSING ROCKER ARM 3.00 MM	2			MOD:M796 ABS;XST:AUS,EUR,JAP	
	84010582B	ADJUSTER, CLOSING ROCKER ARM 3.05 MM	2			MOD:M796 ABS;XST:AUS,EUR,JAP	
	84010592B	ADJUSTER, CLOSING ROCKER ARM 3.10 MM	2			MOD:M796 ABS;XST:AUS,EUR,JAP	
	84010602B	ADJUSTER, CLOSING ROCKER ARM 3.15 MM	2			MOD:M796 ABS;XST:AUS,EUR,JAP	
	84010612B	ADJUSTER, CLOSING ROCKER ARM 3.20 MM	2			MOD:M796 ABS;XST:AUS,EUR,JAP	
	84010622B	ADJUSTER, CLOSING ROCKER ARM 3.25 MM	2			MOD:M796 ABS;XST:AUS,EUR,JAP	
	84010632B	ADJUSTER, CLOSING ROCKER ARM 3.30 MM	2			MOD:M796 ABS;XST:AUS,EUR,JAP	
	84010642B	ADJUSTER, CLOSING ROCKER ARM 3.35 MM	2			MOD:M796 ABS;XST:AUS,EUR,JAP	
	84010652B	ADJUSTER, CLOSING ROCKER ARM 3.40 MM	2			MOD:M796 ABS;XST:AUS,EUR,JAP	
	84010662B	ADJUSTER, CLOSING ROCKER ARM 3.45 MM	2			MOD:M796 ABS;XST:AUS,EUR,JAP	
	84010672B	ADJUSTER, CLOSING ROCKER ARM 3.50 MM	2			MOD:M796 ABS;XST:AUS,EUR,JAP	
	84010682B	ADJUSTER, CLOSING ROCKER ARM 3.55 MM	2			MOD:M796 ABS;XST:AUS,EUR,JAP	
	84010692B	ADJUSTER, CLOSING ROCKER ARM 3.60 MM	2			MOD:M796 ABS;XST:AUS,EUR,JAP	
	84010702B	ADJUSTER, CLOSING ROCKER ARM 3.65 MM	2			MOD:M796 ABS;XST:AUS,EUR,JAP	
	84010712B	ADJUSTER, CLOSING ROCKER ARM 3.70 MM	2			MOD:M796 ABS;XST:AUS,EUR,JAP	
	84010722B	ADJUSTER, CLOSING ROCKER ARM 3.75 MM	2			MOD:M796 ABS;XST:AUS,EUR,JAP	
	84010732B	ADJUSTER, CLOSING ROCKER ARM 3.80 MM	2			MOD:M796 ABS;XST:AUS,EUR,JAP	
	84010742B	ADJUSTER, CLOSING ROCKER ARM 3.85 MM	2			MOD:M796 ABS;XST:AUS,EUR,JAP	
	84010752B	ADJUSTER, CLOSING ROCKER ARM 3.90 MM	2			MOD:M796 ABS;XST:AUS,EUR,JAP	
	84010762B	ADJUSTER, CLOSING ROCKER ARM 3.95 MM	2			MOD:M796 ABS;XST:AUS,EUR,JAP	

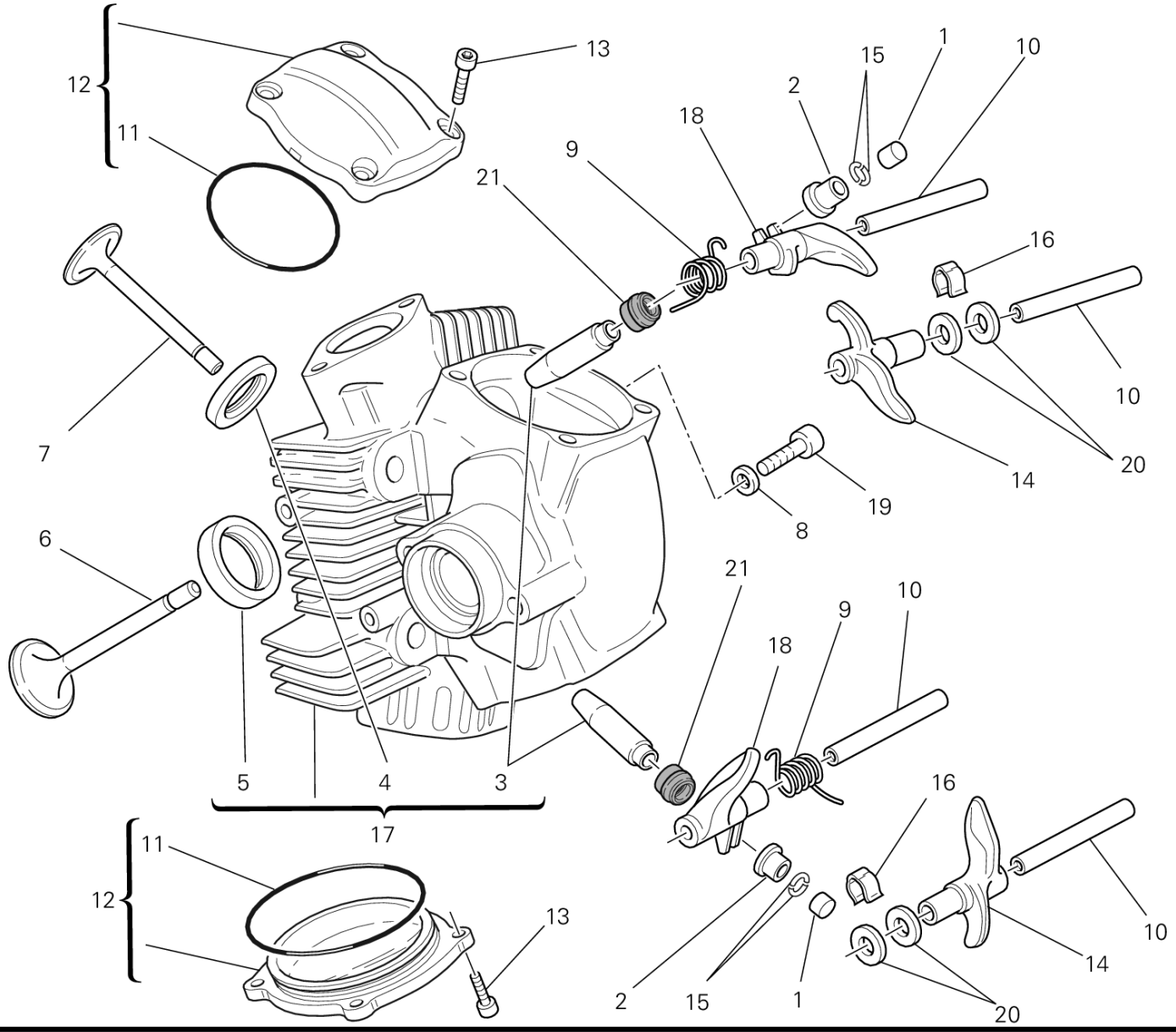
12
11
13
15
1
10
2
18
9
21
16
10
20
14
19
8
7
6
5
4
3
17
21
9
10
18
16
10
14
20
2
15
1
12
11
13

POS.	CODE	DESCRIPTION	QTY	START DATE	END DATE	VALIDITY	NOTES
	84010772B	ADJUSTER, CLOSING ROCKER ARM 4.00 MM	2			MOD:M796 ABS;XST:AUS,EUR,JAP	
	84010782B	ADJUSTER, CLOSING ROCKER ARM 4.05 MM	2			MOD:M796 ABS;XST:AUS,EUR,JAP	
	84010792B	ADJUSTER, CLOSING ROCKER ARM 4.10 MM	2			MOD:M796 ABS;XST:AUS,EUR,JAP	
	84010802B	ADJUSTER, CLOSING ROCKER ARM 4.15 MM	2			MOD:M796 ABS;XST:AUS,EUR,JAP	
	84010812B	ADJUSTER, CLOSING ROCKER ARM 4.20 MM	2			MOD:M796 ABS;XST:AUS,EUR,JAP	
	84010822B	ADJUSTER, CLOSING ROCKER ARM 4.25 MM	2			MOD:M796 ABS;XST:AUS,EUR,JAP	
	84010832B	ADJUSTER, CLOSING ROCKER ARM 4.30 MM	2			MOD:M796 ABS;XST:AUS,EUR,JAP	
	84010842B	ADJUSTER, CLOSING ROCKER ARM 4.35 MM	2			MOD:M796 ABS;XST:AUS,EUR,JAP	
	84010852B	ADJUSTER, CLOSING ROCKER ARM 4.40 MM	2			MOD:M796 ABS;XST:AUS,EUR,JAP	
	84010862B	ADJUSTER, CLOSING ROCKER ARM 4.45 MM	2			MOD:M796 ABS;XST:AUS,EUR,JAP	
	84010872B	ADJUSTER, CLOSING ROCKER ARM 4.50 MM	2			MOD:M796 ABS;XST:AUS,EUR,JAP	
3	30310681AA	GUIDE, VALVE +0.03 MM	2	22/02/2012		DFR:N;MOD:M796 ABS;XST:AUS,EUR,JAP	
	30310681AB	GUIDE, VALVE +0.06 MM	2	22/02/2012		DFR:N;MOD:M796 ABS;XST:AUS,EUR,JAP	
	30310681AC	GUIDE, VALVE +0.09 MM	2	22/02/2012		DFR:N;MOD:M796 ABS;XST:AUS,EUR,JAP	
4	30410911A	SEAT, EXHAUST VALVE	1	24/12/2009		DFR:N;MOD:M796 ABS;XST:AUS,EUR,JAP	
	30410911AB	SEAT, EXHAUST VALVE +0.03 MM	1	22/02/2012		DFR:N;MOD:M796 ABS;XST:AUS,EUR,JAP	
	30410911AC	SEAT, EXHAUST VALVE +0.06 MM	1	22/02/2012		DFR:N;MOD:M796 ABS;XST:AUS,EUR,JAP	
5	30410901A	SEAT, INTAKE VALVE	1	24/12/2009		DFR:N;MOD:M796 ABS;XST:AUS,EUR,JAP	
	30410901AB	SEAT, INLET VALVE +0.03 MM	1	22/02/2012		DFR:N;MOD:M796 ABS;XST:AUS,EUR,JAP	
	30410901AC	SEAT, INLET VALVE +0.06 MM	1	22/02/2012		DFR:N;MOD:M796 ABS;XST:AUS,EUR,JAP	
6	21010752B	INTAKE VALVE	1	17/11/2010		DFR:N;MOD:M796 ABS;XST:AUS,EUR,JAP	
7	21110752C	EXHAUST VALVE	1	17/11/2010		DFR:N;MOD:M796 ABS;XST:AUS,EUR,JAP	
8	85250231A	GASKET	1	24/12/2009		DFR:N;MOD:M796 ABS;XST:AUS,EUR,JAP	

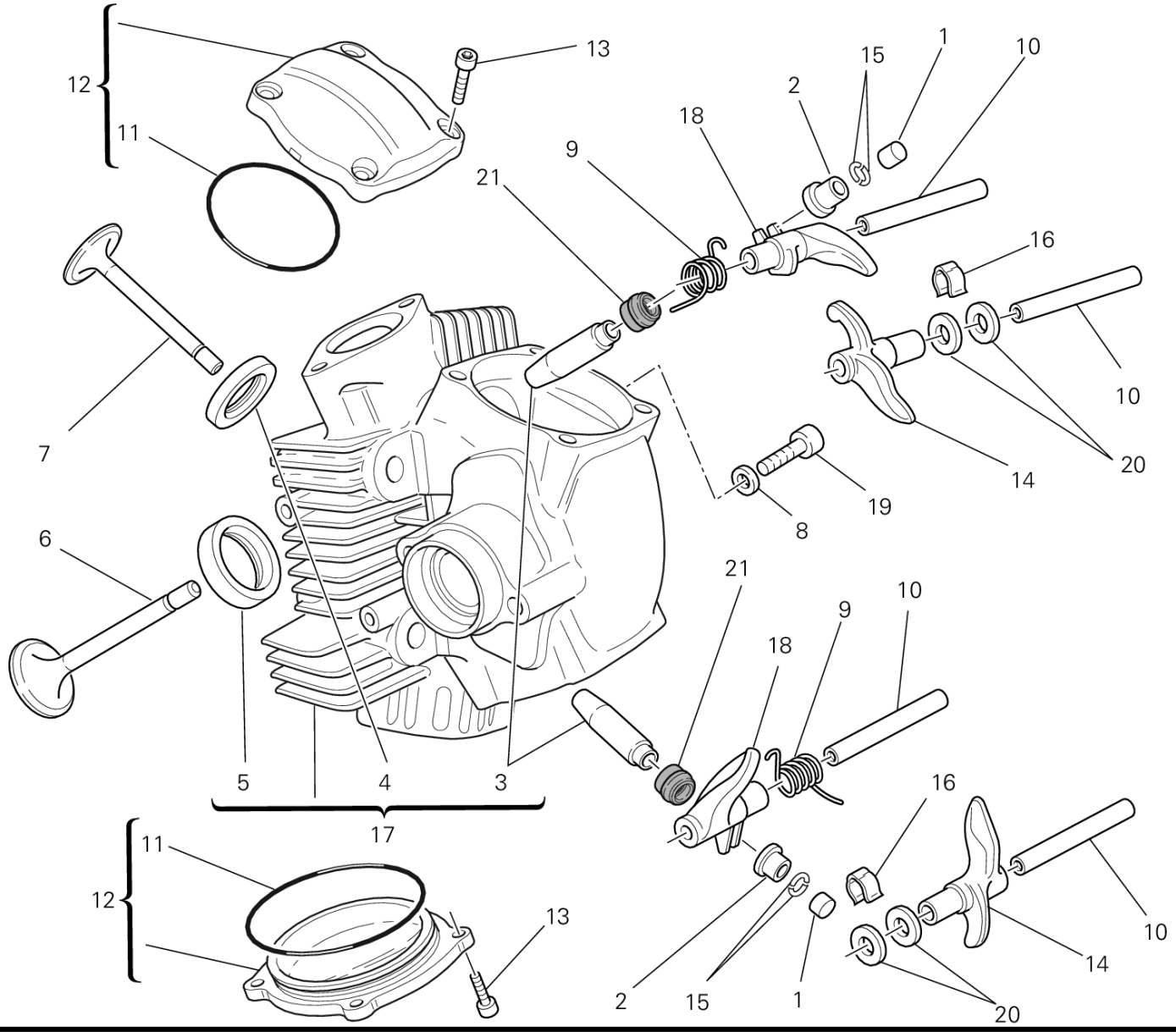
12
11
13
15
1
10
2
18
9
21
16
10
20
14
19
8
7
6
5
4
3
17
21
9
10
18
16
11
12
13
2
15
1
14
10
20

POS.	CODE	DESCRIPTION	QTY	START DATE	END DATE	VALIDITY	NOTES
9	79915021A	SPRING, CLOSING ROCKER ARM	2	17/11/2010		DFR:N;MOD:M796 ABS;XST:AUS,EUR,JAP	
10	821Z0011B	ROCKER ARM PIN	4	17/11/2010		DFR:N;MOD:M796 ABS;XST:AUS,EUR,JAP	
11	88641381A	O-RING 63.13X2.62	2	24/12/2009		DFR:N;MOD:M796 ABS;XST:AUS,EUR,JAP	
12	24020392A	VALVE COVER	2	17/11/2010		DFR:N;MOD:M796 ABS;XST:AUS,EUR,JAP	
13	77150668B	SCREW TCEI M6X18	8	17/11/2010		DFR:N;MOD:M796 ABS;XST:AUS,EUR,JAP	
14	208Z0011A	OPEN. ROCKER ARM	2	17/11/2010		DFR:N;MOD:M796 ABS;XST:AUS,EUR,JAP	
15	66910011E	C RING	4	17/11/2010		DFR:N;MOD:M796 ABS;XST:AUS,EUR,JAP	
16	79912121A	SPRING, ROCKER ARM AXLE	2	17/11/2010		DFR:N;MOD:M796 ABS;XST:AUS,EUR,JAP	
17	30122881AA	COMPLETE HORIZONTAL HEAD	1	17/11/2010		DFR:N;MOD:M796 ABS;XST:AUS,EUR,JAP	
18	209Z0011A	CLOSE ROCKER ARM	2	17/11/2010		DFR:N;MOD:M796 ABS;XST:AUS,EUR,JAP	
19	77911331A	SCREW, SPECIAL TCEI M6X12	1	24/12/2009		DFR:N;MOD:M796 ABS;XST:AUS,EUR,JAP	
20	064770010	WASHER, THRUST	4	17/11/2010		DFR:N;MOD:M796 ABS;XST:AUS,EUR,JAP	
21	76410871A	SEAL VALVE STEM	2	17/11/2010		DFR:N;MOD:M796 ABS;XST:AUS,EUR,JAP	

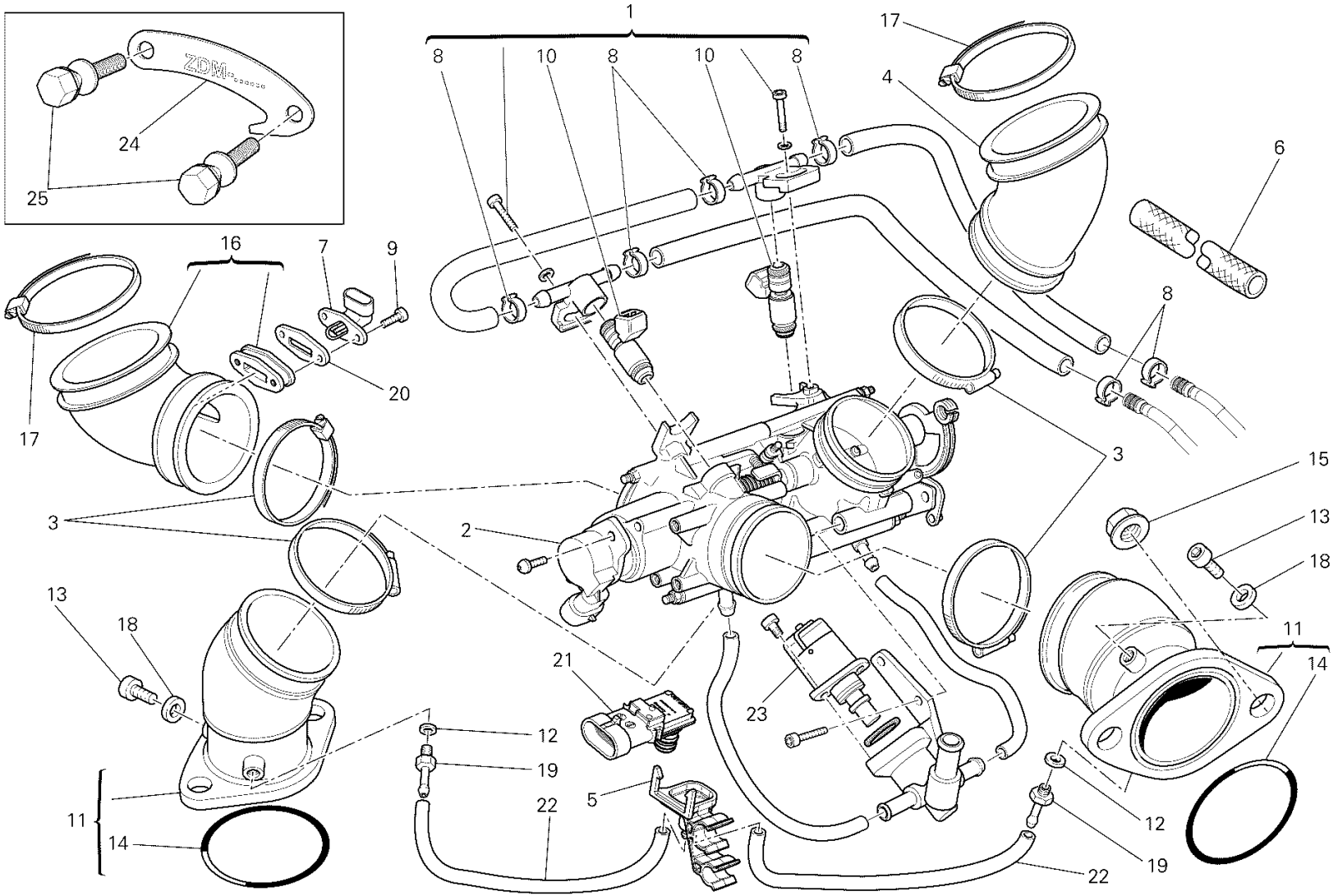
1
8
10
8
10
8
17
4
6
8
16
7
9
20
17
3
2
3
15
13
18
11
14
13
18
21
23
12
19
22
5
11
14
12
19
22

IMP00716

POS.	CODE	DESCRIPTION	QTY	START DATE	END DATE	VALIDITY	NOTES
1	28240833A	THROTTLE BODY	1	22/03/2010		MOD:M796 ABS;XST:AUS,EUR,JAP	
2	28440081A	THROTTLE VALVE POTENTIOMETER	1			MOD:M796 ABS;XST:AUS,EUR,JAP	
3	74141801A	CLAMP 40-60 MM	4	22/03/2010		MOD:M796 ABS;XST:AUS,EUR,JAP	
4	80110271A	JOINT, AIR CLEANER	1	22/03/2010		MOD:M796 ABS;XST:AUS,EUR,JAP	
5	81413031A	BRACKET SENSOR PRESSURE	1	24/12/2009		MOD:M796 ABS;XST:AUS,EUR,JAP	
6	46013381A	PROTECTION SHEATH	1	22/03/2010		MOD:M796 ABS;XST:AUS,EUR,JAP	
7	55240121A	SENSOR, AIR TEMPERATURE	1	22/03/2010		MOD:M796 ABS;XST:AUS,EUR,JAP	
8	28740241B	CLAMP CLICK 16.8MM	6	23/02/2012		DFR:N;MOD:M796 ABS;XST:AUS,EUR,JAP	
9	77350068B	SCREW TCEIR M3X12	2	22/03/2010		MOD:M796 ABS;XST:AUS,EUR,JAP	
10	28040231A	INJECTOR	2	22/03/2010		MOD:M796 ABS;XST:AUS,EUR,JAP	
11	140Z0011A	INTAKE MANIFOLD	2	27/02/2012		DFR:N;MOD:M796 ABS;XST:AUS,EUR,JAP	
12	025070223	ALUMINIUM GASKET	2	15/03/2012		DFR:N;MOD:M796 ABS;XST:AUS,EUR,JAP	
13	77350618B	SCREW TCEIR M6X8	2	15/03/2012		DFR:N;MOD:M796 ABS;XST:AUS,EUR,JAP	
14	46320222A	O-RING	2	02/04/2010		DFR:N;MOD:M796 ABS;XST:AUS,EUR,JAP	
15	74810391A	NUT M8	4	15/03/2012		DFR:N;MOD:M796 ABS;XST:AUS,EUR,JAP	
16	80110311A	TUBE, AIR CLEANER JOINT	1	23/02/2012		DFR:N;MOD:M796 ABS;XST:AUS,EUR,JAP	
17	74140671A	CLAMP 68	2	23/02/2012		DFR:N;MOD:M796 ABS;XST:AUS,EUR,JAP	
18	85250231A	GASKET	2	15/03/2012		DFR:N;MOD:M796 ABS;XST:AUS,EUR,JAP	
19	81413231A	NIPPLE, HOSE	2	15/03/2012		DFR:N;MOD:M796 ABS;XST:AUS,EUR,JAP	
20	78811041A	GASKET, COOLING WATER SENSOR	1	22/03/2010		DFR:N;MOD:M796 ABS;XST:AUS,EUR,JAP	
21	55241441A	SENSOR, PRESSURE	1	23/02/2012		DFR:N;MOD:M796 ABS;XST:AUS,EUR,JAP	
22	59013411A	HOSE, RUBBER	2	24/12/2009		DFR:N;MOD:M796 ABS;XST:AUS,EUR,JAP	

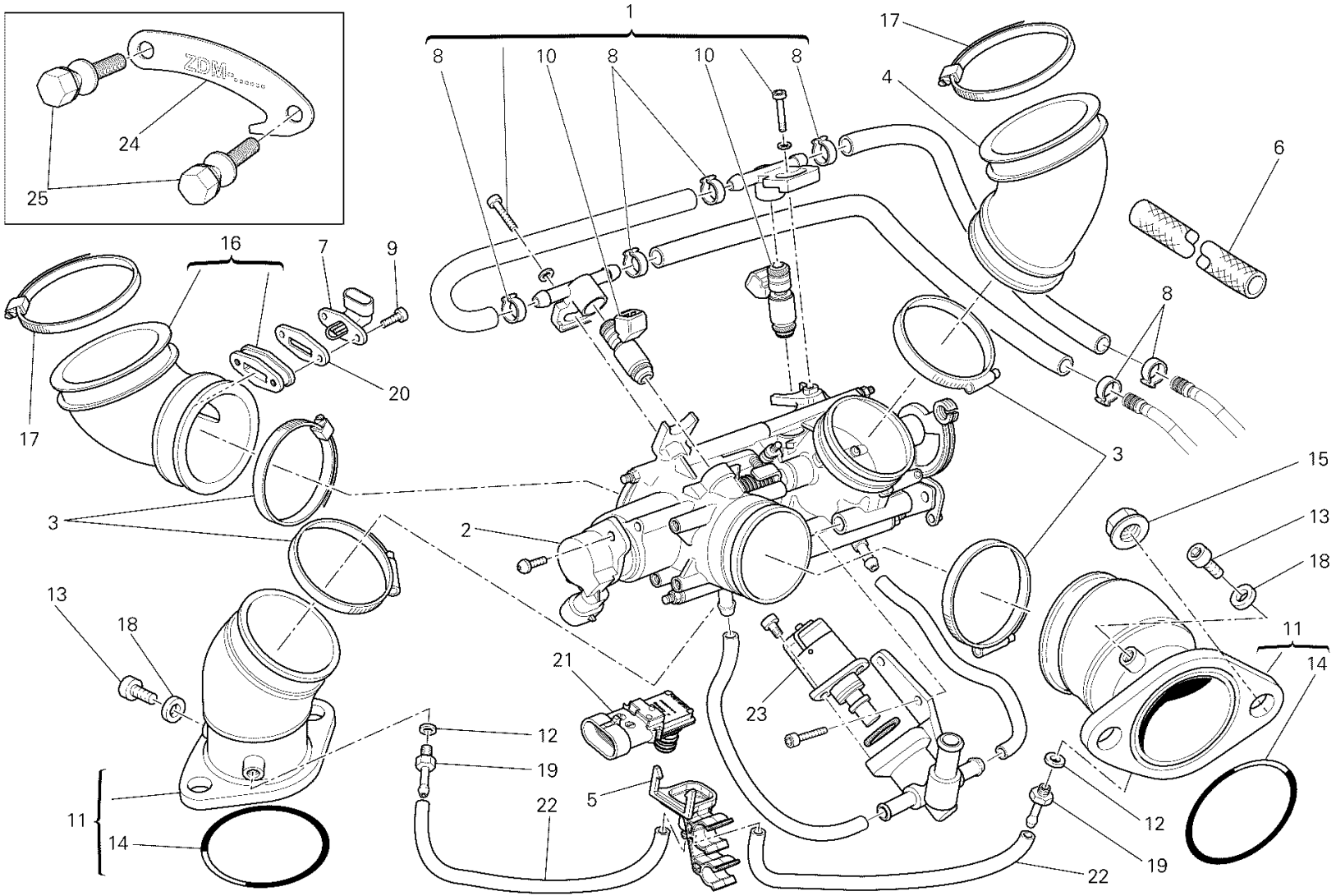
1
8
10
8
10
8
17
4
6
8
16
7
9
20
17
3
2
3
15
13
18
11
14
13
18
21
23
12
19
22
5
11
14
12
19
22

IMP00716

POS.	CODE	DESCRIPTION	QTY	START DATE	END DATE	VALIDITY	NOTES
23	28340201A	STEPPER MOTOR	1			MOD:M796 ABS;XST:AUS,EUR,JAP	
24	82714011A	PLATE DERATED 25 KW	1	23/02/2012		DFR:N;MOD:M796 ABS;XST:AUS,EUR,JAP	
	82810021A	PLATE DERATED 35 KW	1	22/03/2010		DFR:N;MOD:M796 ABS;XST:AUS,EUR,JAP	
25	77912322A	SCREW, ANTITAMPERING	2	22/03/2010		DFR:N;MOD:M796 ABS;XST:AUS,EUR,JAP	

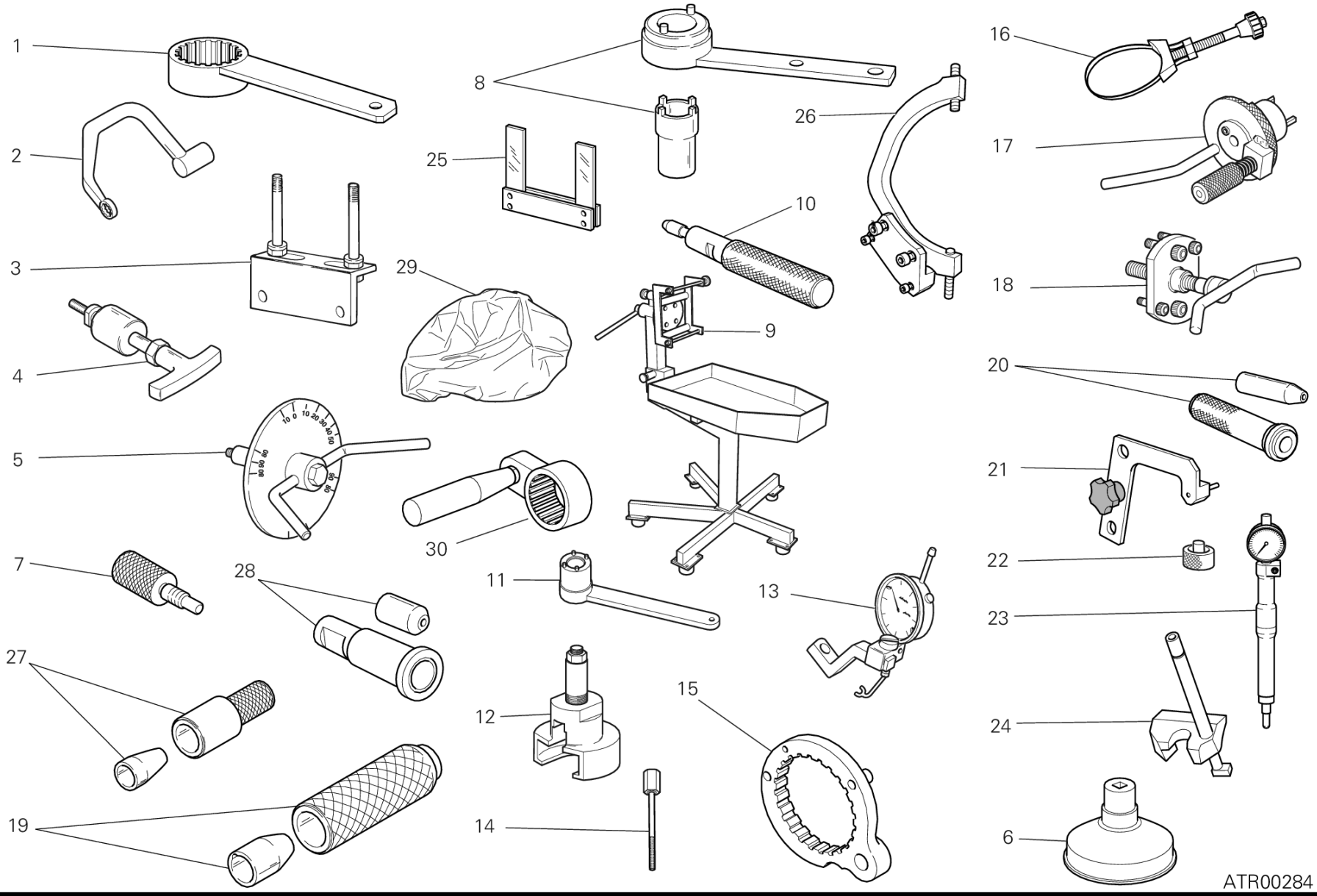
1
2
3
4
5
7
27
19
8
25
29
30
28
11
12
14
15
26
10
9
13
16
17
18
20
21
22
23
24
6
ATR00284

DRAWING 001 - WORKSHOP SERVICE TOOLS, ENGINE [MOD:M796 ABS;XST:AUS,EUR,JAP]

GROUP TOOLS

POS.	CODE	DESCRIPTION	QTY	START DATE	END DATE	VALIDITY	NOTES
1	887133218	WRENCH FOR HOLDING TIMING BELT ROLLERS	1			MOD:M796 ABS;XST:AUS,EUR,JAP	
2	887132676	HEAD NUTS HOLDER WRENCH (M10)	1			MOD:M796 ABS;XST:AUS,EUR,JAP	
3	887132103	HEAD MOUNTING BASE	1			MOD:M796 ABS;XST:AUS,EUR,JAP	
4	887131994	ROCKER PIN EXTRACTOR	1			MOD:M796 ABS;XST:AUS,EUR,JAP	
5	887651657	DEGREE WHEEL HOLDER TOOL	1			MOD:M796 ABS;XST:AUS,EUR,JAP	
6	887130944	WRENCH TO TIGHTEN OIL FILTER CARTRIDGE	1			MOD:M796 ABS;XST:AUS,EUR,JAP	
7	887132282	BELT ROLLER TIMING OF TWO-VALVE HEAD	1			MOD:M796 ABS;XST:AUS,EUR,JAP	
8	887131805	DRIVING ROLLER TIGHTENING TOOL	1			MOD:M796 ABS;XST:AUS,EUR,JAP	
9	887131832	BENCH FOR ENGINE REPAIR	1			MOD:M796 ABS;XST:AUS,EUR,JAP	
10	887132442	TOOL, OIL SEAL MOUNTING (Ø7)	1			MOD:M796 ABS;XST:AUS,EUR,JAP	
11	887130137	CRANKSHAFT GEAR RETAINING WRENCH	1			MOD:M796 ABS;XST:AUS,EUR,JAP	
12	887132092	EXTRACTOR FOR PRIMARY DRIVE GEAR	1			MOD:M796 ABS;XST:AUS,EUR,JAP	
13	887651581	VALVE LIFT GAUGE	1			MOD:M796 ABS;XST:AUS,EUR,JAP	
14	887132591	CLUTCH SCREW	1			MOD:M796 ABS;XST:AUS,EUR,JAP	
15	887132556	WRENCH HOLD CLUCH HOUSING DRUM STEADY	1			MOD:M796 ABS;XST:AUS,EUR,JAP	
16	887132906	WRENCH, OIL FILTER CARTRIDGE	1			MOD:M796 ABS;XST:AUS,EUR,JAP	
17	887132011	CRANKSHAFT RESET TOOL	1			MOD:M796 ABS;XST:AUS,EUR,JAP	
18	887131749	DRIVE ROLLER PULLER	1			MOD:M796 ABS;XST:AUS,EUR,JAP	
19	887132834	TOOL SNAP RING INSTALLATION	1			MOD:M796 ABS;XST:AUS,EUR,JAP	
20	887133520	CRANKCASES ASSEMBLING CAP	1			MOD:M796 ABS;XST:AUS,EUR,JAP	
21	887133334	PLATE POSITIONING GEAR ENGAGEMENT FORK	1			MOD:M796 ABS;XST:AUS,EUR,JAP	
22	887651298	SPACER FOR CHECKING LOWER VALVE SHIM	1			MOD:M796 ABS;XST:AUS,EUR,JAP	
23	887132090	T.D.C. CONTROL GAUGE	1			MOD:M796 ABS;XST:AUS,EUR,JAP	
24	887132916	CLOSING ROCKER & SPRING ASSEMBLING TOOL	1			MOD:M796 ABS;XST:AUS,EUR,JAP	
25	887651000	FORK FEELER GAUGE 0.1 MM	1			MOD:M796 ABS;XST:AUS,EUR,JAP	
	887651005	FORK FEELER GAUGE 0.2 MM	1			MOD:M796 ABS;XST:AUS,EUR,JAP	
	887651006	FORK FEELER GAUGE 0.3 MM	1			MOD:M796 ABS;XST:AUS,EUR,JAP	
26	887133367	FLYWHEEL WRENCH	1			MOD:M796 ABS;XST:AUS,EUR,JAP	
27	887132672	SEAL RING DRIVING TOOL	1			MOD:M796 ABS;XST:AUS,EUR,JAP	
28	887133519	PUNCH TOOL FOR DRIVING SEAL RING	1			MOD:M796 ABS;XST:AUS,EUR,JAP	
29	887131886	ENGINE CANVAS	1			MOD:M796 ABS;XST:AUS,EUR,JAP	
30	887133394	TOOL SNAP RING INSTALLATION	1			MOD:M796 ABS;XST:AUS,EUR,JAP	

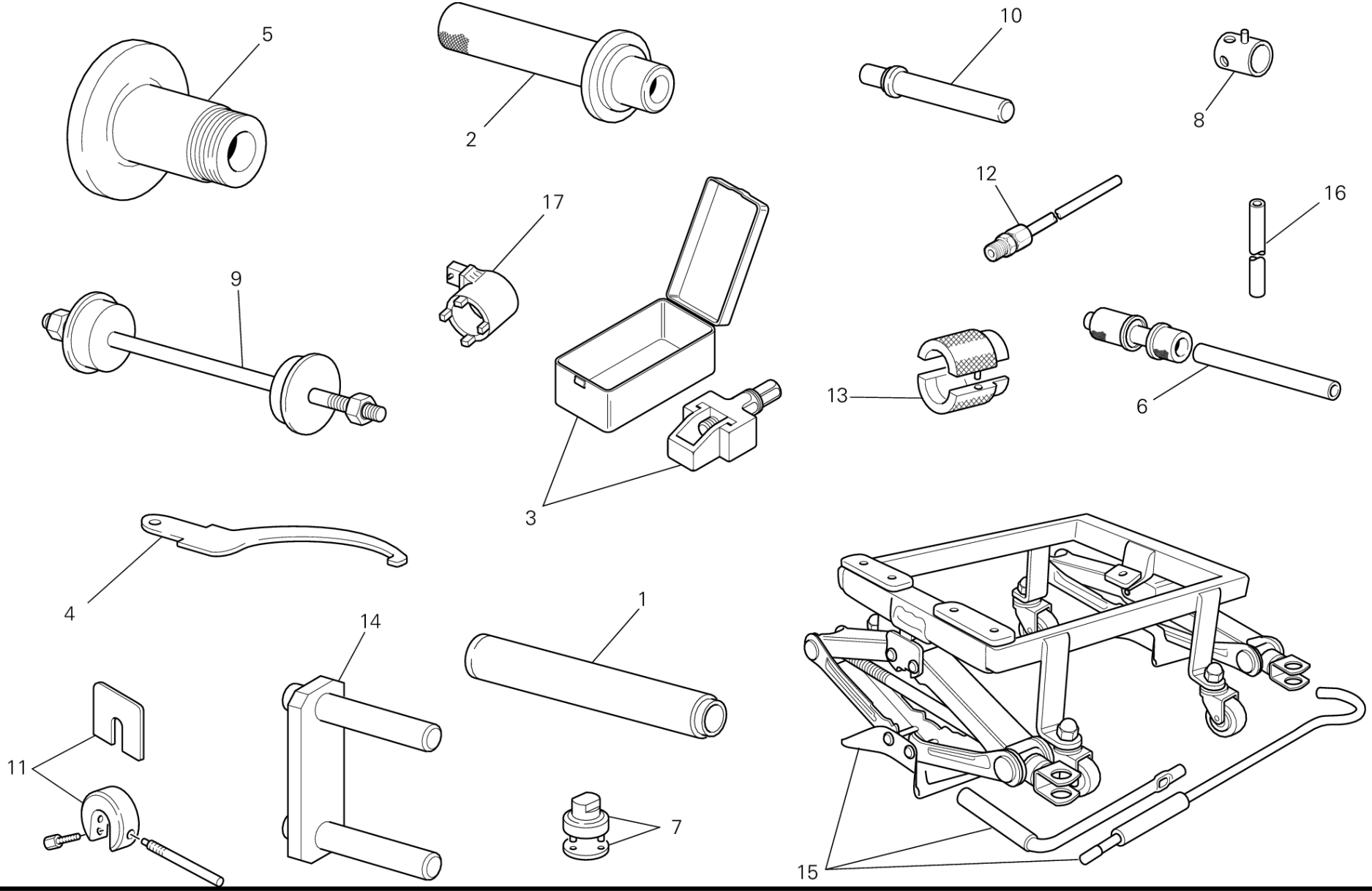
5
2
10
8
12
16
17
9
13
6
3
4
1
14
11
7
15

DRAWING 01A - WORKSHOP SERVICE TOOLS, FRAME [MOD:M796 ABS;XST:AUS,EUR,JAP]

GROUP TOOLS

POS.	CODE	DESCRIPTION	QTY	START DATE	END DATE	VALIDITY	NOTES
1	887131072	DRIVING STOPPER FOR THE HALF BEARING	1			MOD:M796 ABS;XST:AUS,EUR,JAP	
2	887131068	STOPPER ASSEMBLING ROLLER BEARING	1			MOD:M796 ABS;XST:AUS,EUR,JAP	
3	887132562	TOOL FOR ASSEMBLING CHAIN	1			MOD:M796 ABS;XST:AUS,EUR,JAP	
4	887131038	SPANNER FOR ADJUSTING THE ECCENTRIC HUB	1			MOD:M796 ABS;XST:AUS,EUR,JAP	
5	887131073	TOOL BALANCING REAR WHEEL	1			MOD:M796 ABS;XST:AUS,EUR,JAP	
6	887132409	TOOL ASSEMBLING SWINGARM BALL BEARING	1			MOD:M796 ABS;XST:AUS,EUR,JAP	
7	887131058	SPANNER TO ASSEMBLE THE STEERING SLEEVE	1			MOD:M796 ABS;XST:AUS,EUR,JAP	
8	800070139	WRENCH FOR FRONT WHEEL SPINDLE	1			MOD:M796 ABS;XST:AUS,EUR,JAP	
9	887131062	TOOL ASSEMBLING STEERING TUBE BEARING	1			MOD:M796 ABS;XST:AUS,EUR,JAP	
10	887131071	STOPPER ASSEMBLING ROLLER BEARING	1			MOD:M796 ABS;XST:AUS,EUR,JAP	
11	887130957	TOOL TO KEEP THE SPACER SHOWA FORKS	1			MOD:M796 ABS;XST:AUS,EUR,JAP	
12	887131010	CONNECTOR FOR EXHAUST GAS TAKE-UP POINT	1			MOD:M796 ABS;XST:AUS,EUR,JAP	
13	887131096	TOOL TO OVERHAUL FORKS	1			MOD:M796 ABS;XST:AUS,EUR,JAP	
14	887131515	FRAME/MOTOR SUPPORT	1			MOD:M796 ABS;XST:AUS,EUR,JAP	
15	887133220	BENCH FOR ENGINE REPAIR	1			MOD:M796 ABS;XST:AUS,EUR,JAP	
16	887130958	TRACTION BAR SHOWA FORKS OVERHAULING	1			MOD:M796 ABS;XST:AUS,EUR,JAP	
17	887133166	WRENCH FOR TIGHTENING FRAME RING NUT	1			MOD:M796 ABS;XST:AUS,EUR,JAP	

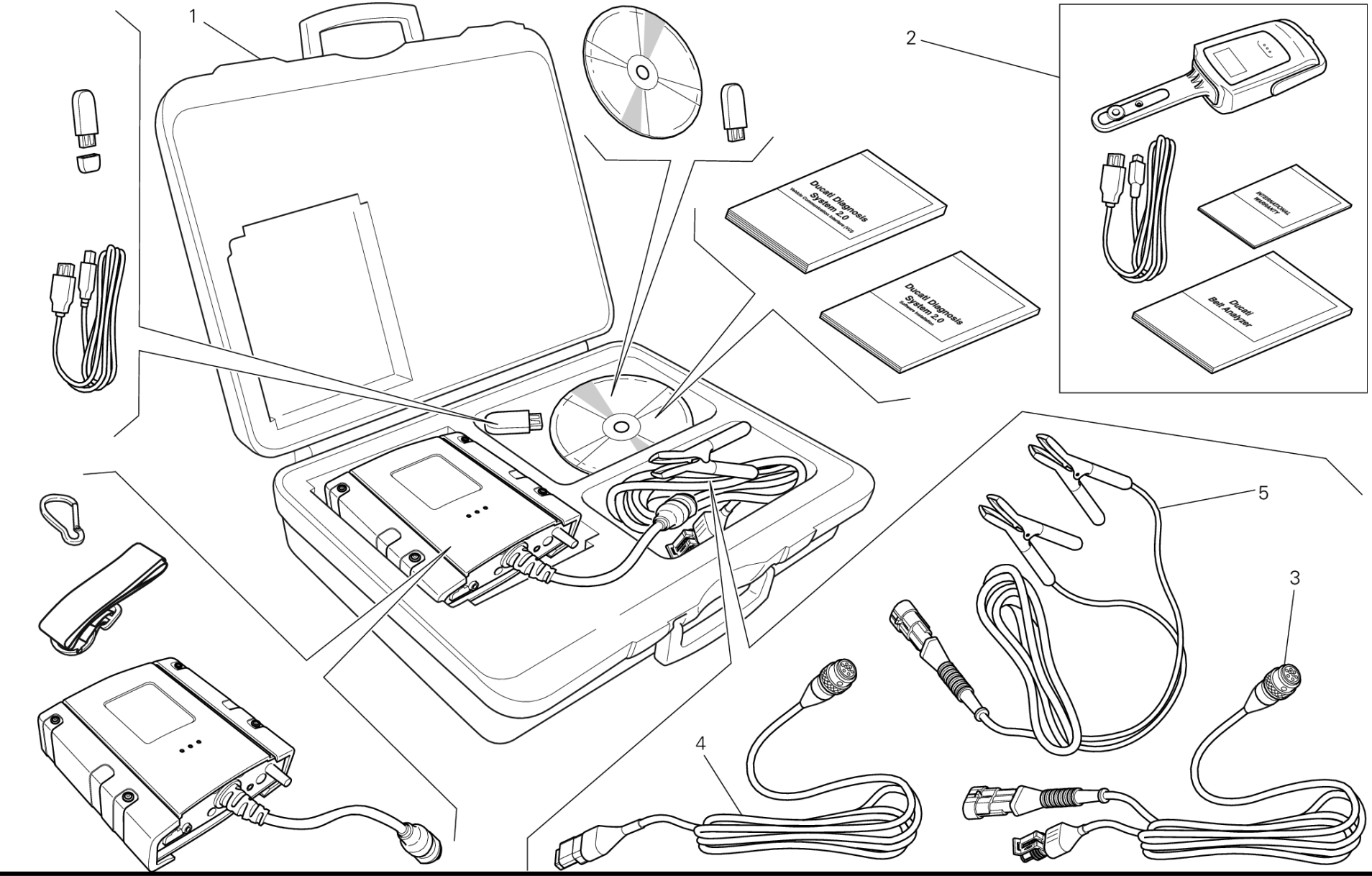
1
2
Ducati Diagnosis System 2.0
Ducati Diagnosis System 2.0
INTERNATIONAL WARRANTY
Ducati Belt Analyzer
5
3
4

POS.	CODE	DESCRIPTION	QTY	START DATE	END DATE	VALIDITY	NOTES
1	979000252	DDS 2 (Ducati Diagnosis System 2.0)	1			MOD:M796 ABS;XST:AUS,EUR,JAP	
2	979000253	BELT TENSIONING KIT	1			MOD:M796 ABS;XST:AUS,EUR,JAP	
3	979000254	MAIN CABLE	1			MOD:M796 ABS;XST:AUS,EUR,JAP	
4	979000255	MAIN CABLE (CAN)	1			MOD:M796 ABS;XST:AUS,EUR,JAP	
5	979000256	MAIN CABLE DDS	1			MOD:M796 ABS;XST:AUS,EUR,JAP	

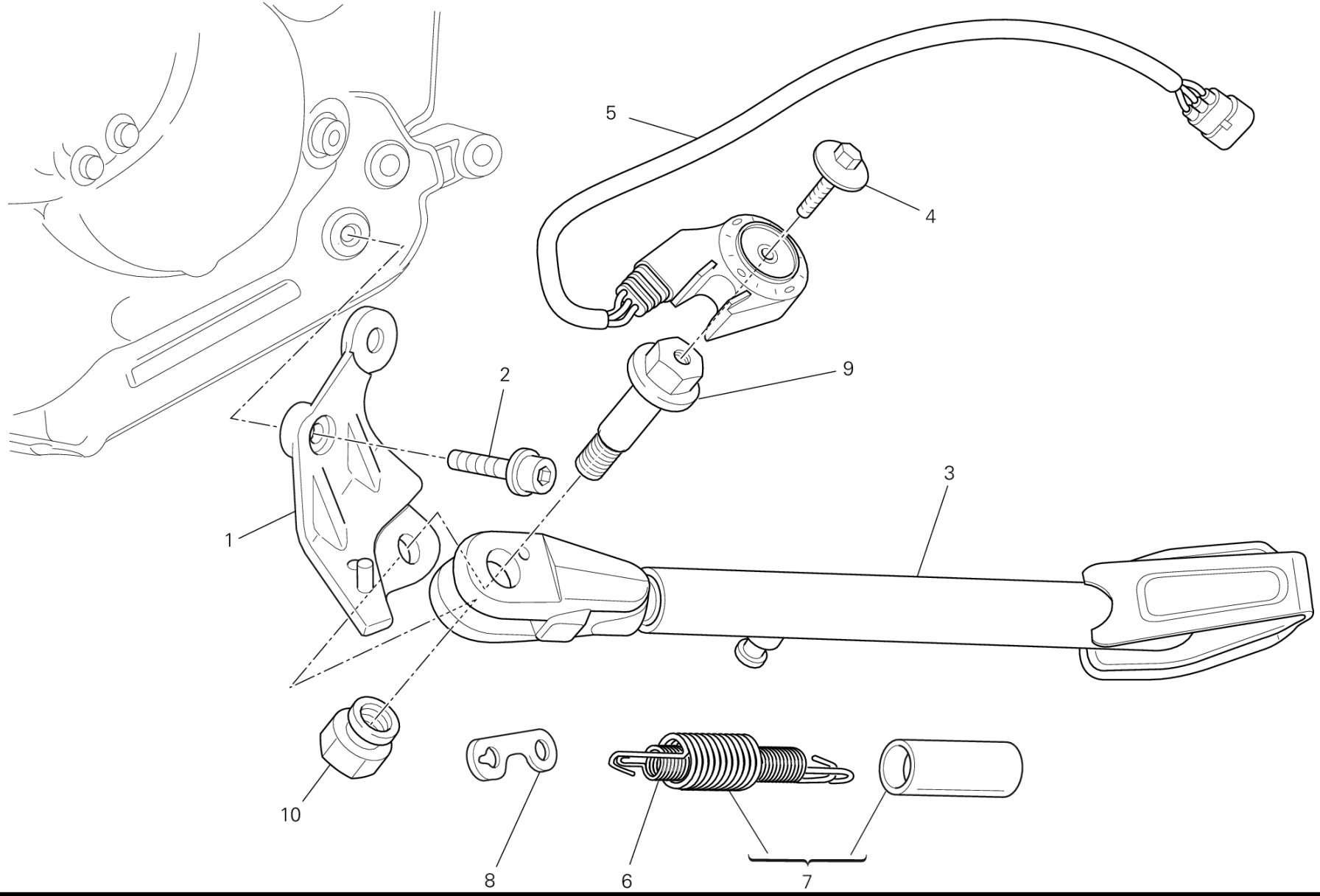
5
4
9
2
3
1
10
8
6
7

DRAWING 017 - SIDE STAND [MOD:M796 ABS;XST:AUS,EUR,JAP]

GROUP FRAME

POS.	CODE	DESCRIPTION	QTY	START DATE	END DATE	VALIDITY	NOTES
1	55620511A	BRACKET, SIDE STAND	1	24/12/2009		DFR:N;MOD:M796 ABS;XST:AUS,EUR,JAP	
2	77110481A	SCREW TCEI M10X25	1	23/02/2012		DFR:N;MOD:M796 ABS;XST:AUS,EUR,JAP	
3	55610571A	SIDE STAND	1	24/12/2009		DFR:N;MOD:M796 ABS;XST:AUS,EUR,JAP	
4	77940053A	SCREW	1	23/02/2012		DFR:N;MOD:M796 ABS;XST:AUS,EUR,JAP	
5	53910234B	SWITCH, STAND	1	23/02/2012		DFR:N;MOD:M796 ABS;XST:AUS,EUR,JAP	
6	79910891C	INNER SPRING	1	24/12/2009		DFR:N;MOD:M796 ABS;XST:AUS,EUR,JAP	
7	79920881C	OUTER SPRING	1	24/12/2009		DFR:N;MOD:M796 ABS;XST:AUS,EUR,JAP	
8	82711392B	LINK, SIDE STAND	1	24/12/2009		DFR:N;MOD:M796 ABS;XST:AUS,EUR,JAP	
9	55610181D	SHAFT, STAND	1	24/12/2009		DFR:N;MOD:M796 ABS;XST:AUS,EUR,JAP	
10	74941458C	NUT M10X1.25	1	24/12/2009		DFR:N;MOD:M796 ABS;XST:AUS,EUR,JAP	

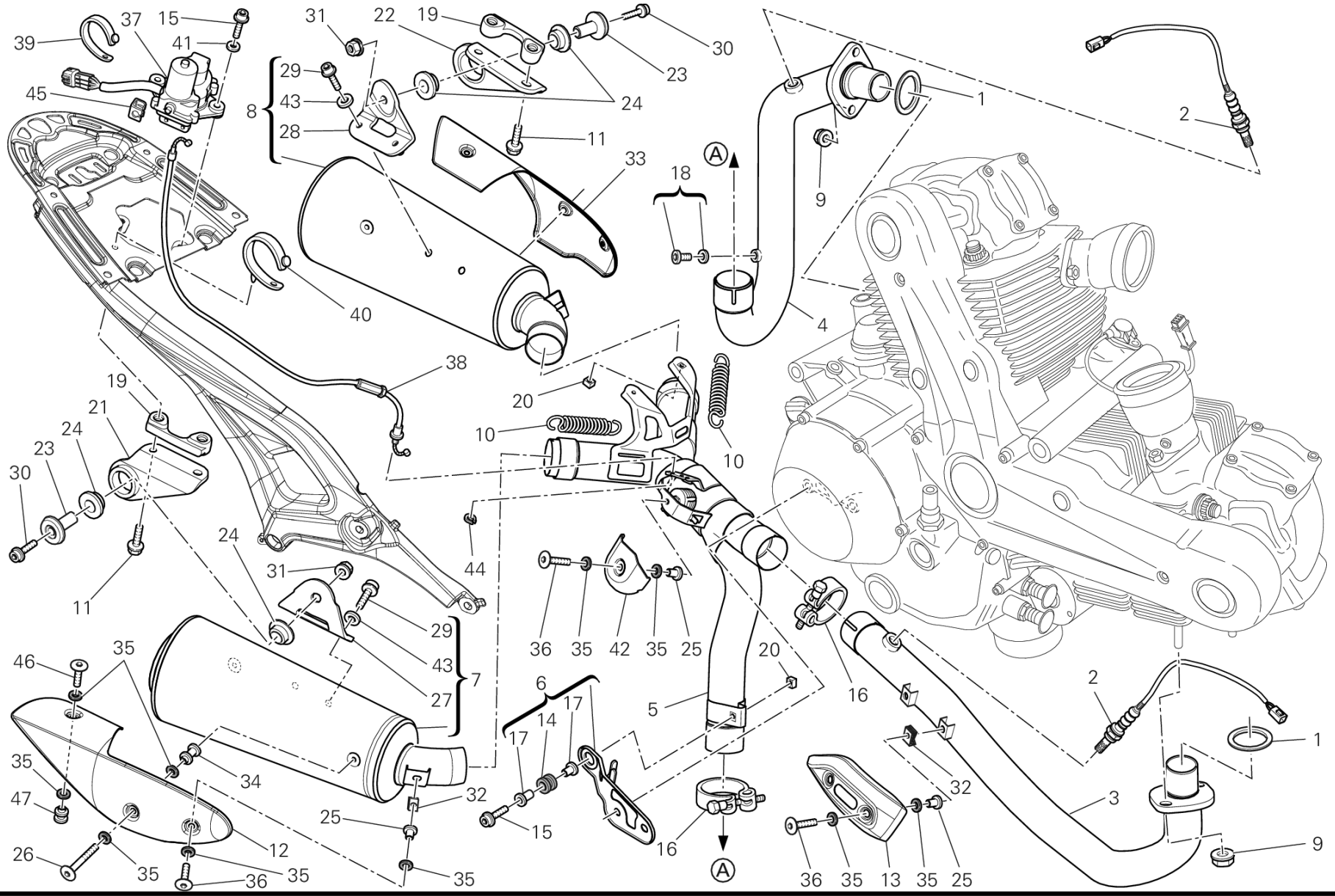
39
37
15
41
45
31
22
19
30
23
24
29
43
28
8
11
33
18
A
1
2
9
40
4
38
20
10
19
21
24
23
30
11
24
31
44
29
43
27
7
36
35
42
35
25
20
16
46
35
6
17
14
17
5
2
1
35
34
47
32
25
15
16
32
3
26
12
35
36
35
35
A
36
35
13
35
25
9

POS.	CODE	DESCRIPTION	QTY	START DATE	END DATE	VALIDITY	NOTES
1	037084005	GASKET, EXHAUST PIPE	2	12/11/2012		DFR:N;MOD:M796 ABS;XST:AUS,EUR,JAP	
2	55211491A	SENSOR LAMBDA SOND	2	23/02/2012		DFR:N;MOD:M796 ABS;XST:AUS,EUR,JAP	
3	57012891A	HORIZONTAL EXHAUST PIPE	1	23/02/2012		DFR:N;MOD:M796 ABS;XST:AUS,EUR,JAP	
4	57112771A	VERTICAL EXHAUST PIPE	1	23/02/2012		DFR:N;MOD:M796 ABS;XST:AUS,EUR,JAP	
5	57211581B	PIPE, EXHAUST CENTER	1	23/02/2012		DFR:N;MOD:M796 ABS;XST:AUS,EUR,JAP	
6	830P4822C	BRACKET	1	01/09/2011		DFR:N;MOD:M796 ABS;XST:AUS,EUR,JAP	
7	57313131C	RIGHT SILENCER	1	23/02/2012		DFR:N;MOD:M796 ABS;XST:JAP	JAP-TWN
	57313141A	RIGHT SILENCER	1	23/02/2012		DFR:N;MOD:M796 ABS;XST:AUS,EUR,JAP	EUR-BRA-AUS
8	57413081A	LEFT SILENCER	1	23/02/2012		DFR:N;MOD:M796 ABS;XST:AUS,EUR,JAP	EUR-BRA-AUS
	57413101C	LEFT SILENCER	1	23/02/2012		DFR:N;MOD:M796 ABS;XST:JAP	JAP-TWN
9	74840331A	NUT M8	4	23/02/2012		DFR:N;MOD:M796 ABS;XST:AUS,EUR,JAP	
10	79910485A	SPRING EXHAUST , LONG	2	23/02/2012		DFR:N;MOD:M796 ABS;XST:AUS,EUR,JAP	
11	77156718B	SCREW TCEIF M6X30	4	23/02/2012		DFR:N;MOD:M796 ABS;XST:AUS,EUR,JAP	
12	46014091A	COVER, EXHAUST PIPE RH	1	23/02/2012		DFR:N;MOD:M796 ABS;XST:AUS,EUR,JAP	
13	46013242B	COVER, EXHAUST TUBE	1	23/02/2012		DFR:N;MOD:M796 ABS;XST:AUS,EUR,JAP	
14	76411261A	DAMPER 25X17.5X10	1	23/02/2012		DFR:N;MOD:M796 ABS;XST:AUS,EUR,JAP	
15	77354898B	SCREW TCEIR M6X30	1	23/02/2012		DFR:N;MOD:M796 ABS;XST:AUS,EUR,JAP	
16	74141371A	CONNECTOR COMP, EXHAUST PIPE	2	23/02/2012		DFR:N;MOD:M796 ABS;XST:AUS,EUR,JAP	

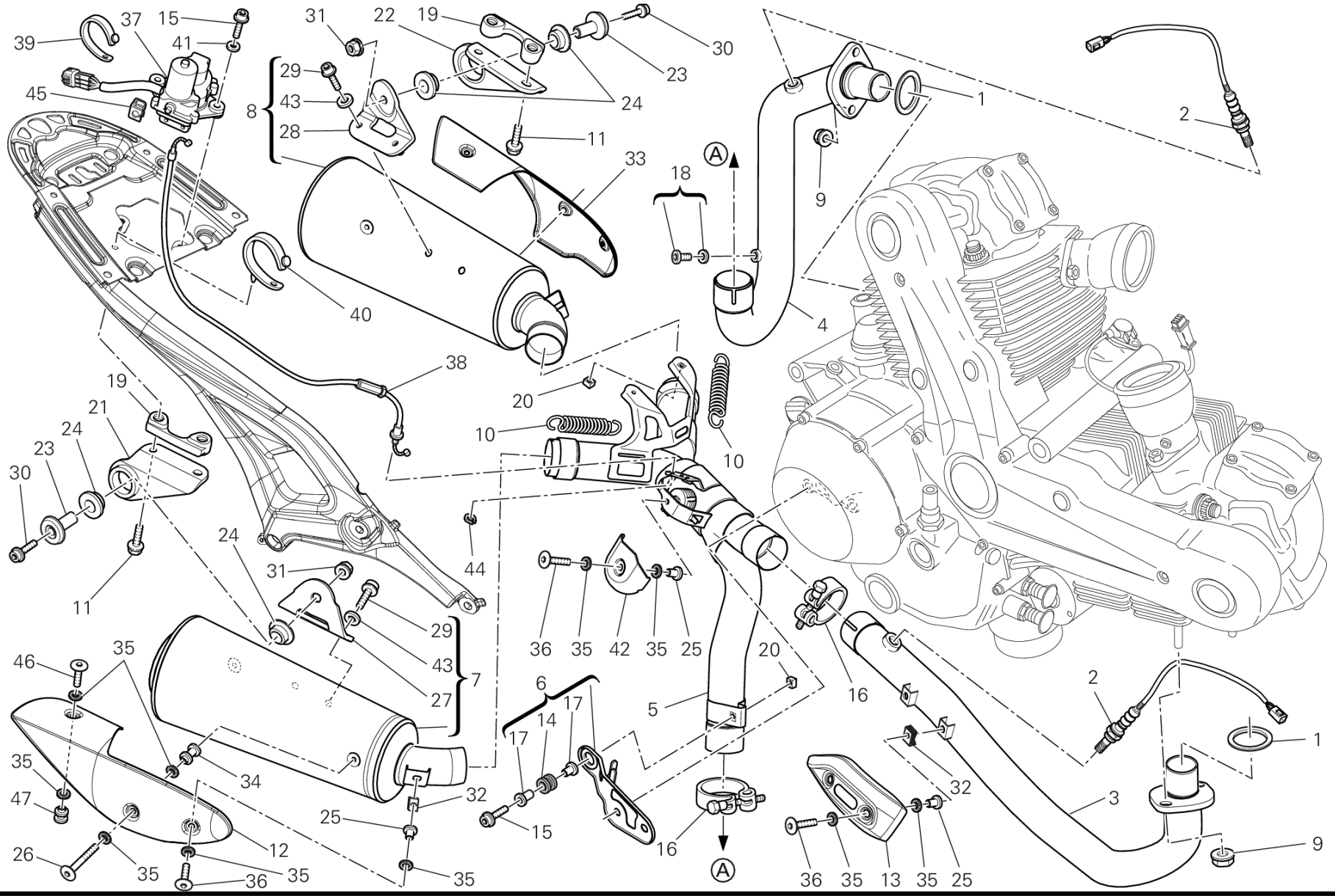
39
37
15
41
45
31
22
19
30
23
24
29
43
28
8
11
33
18
A
1
2
9
40
4
38
20
10
10
19
21
24
23
30
11
24
31
44
36
35
42
35
25
29
43
27
7
46
35
6
17
14
17
5
20
16
2
1
35
47
34
32
25
15
16
A
32
3
9
26
35
12
36
35
35
36
35
13
35
25

POS.	CODE	DESCRIPTION	QTY	START DATE	END DATE	VALIDITY	NOTES
17	71614161A	SPACER 25X10X6	2	23/02/2012		DFR:N;MOD:M796 ABS;XST:AUS,EUR,JAP	
18	78020011A	PLUG	1			MOD:M796 ABS;XST:AUS,EUR,JAP	
19	80610281A	SPACER	2	23/02/2012		DFR:N;MOD:M796 ABS;XST:AUS,EUR,JAP	
20	74640081A	SPECIAL NUT	2	13/04/2011		DFR:N;MOD:M796 ABS;XST:AUS,EUR,JAP	
21	82716081A	RIGHT BRACKET	1	23/02/2012		DFR:N;MOD:M796 ABS;XST:AUS,EUR,JAP	
22	82716071A	LEFT BRACKET	1	23/02/2012		DFR:N;MOD:M796 ABS;XST:AUS,EUR,JAP	
23	71314361A	COLLAR, SILENCER MOUNTING	2	23/02/2012		DFR:N;MOD:M796 ABS;XST:AUS,EUR,JAP	
24	76410011A	DAMPER	4	23/02/2012		DFR:N;MOD:M796 ABS;XST:AUS,EUR,JAP	
25	71611071A	SPACER	5	23/02/2012		DFR:N;MOD:M796 ABS;XST:AUS,EUR,JAP	
26	77211011B	SCREW TBEI M6X30	2	23/02/2012		DFR:N;MOD:M796 ABS;XST:AUS,EUR,JAP	
27	57610661A	BRACKET, RIGHT SILENCER	1	01/01/2001		DFR:N;MOD:M796 ABS;XST:AUS,EUR,JAP	
28	57610651A	BRACKET, LEFT SILENCER	1	01/01/2001		DFR:N;MOD:M796 ABS;XST:AUS,EUR,JAP	
29	77157239E	SCREW TCEIF M8X20	4	01/01/2001		DFR:N;MOD:M796 ABS;XST:AUS,EUR,JAP	
30	77355068B	SCREW TCEIR M8X35	2	23/02/2012		DFR:N;MOD:M796 ABS;XST:AUS,EUR,JAP	
31	74941128B	NUT M8	2	23/02/2012		DFR:N;MOD:M796 ABS;XST:AUS,EUR,JAP	
32	85040381A	QUICK FASTENING	4	23/02/2012		DFR:N;MOD:M796 ABS;XST:AUS,EUR,JAP	
33	46014101A	COVER, EXHAUST PIPE LH	1	23/02/2012		DFR:N;MOD:M796 ABS;XST:AUS,EUR,JAP	
34	71614241A	SPACER 6.2X8X16	2	23/02/2012		DFR:N;MOD:M796 ABS;XST:AUS,EUR,JAP	

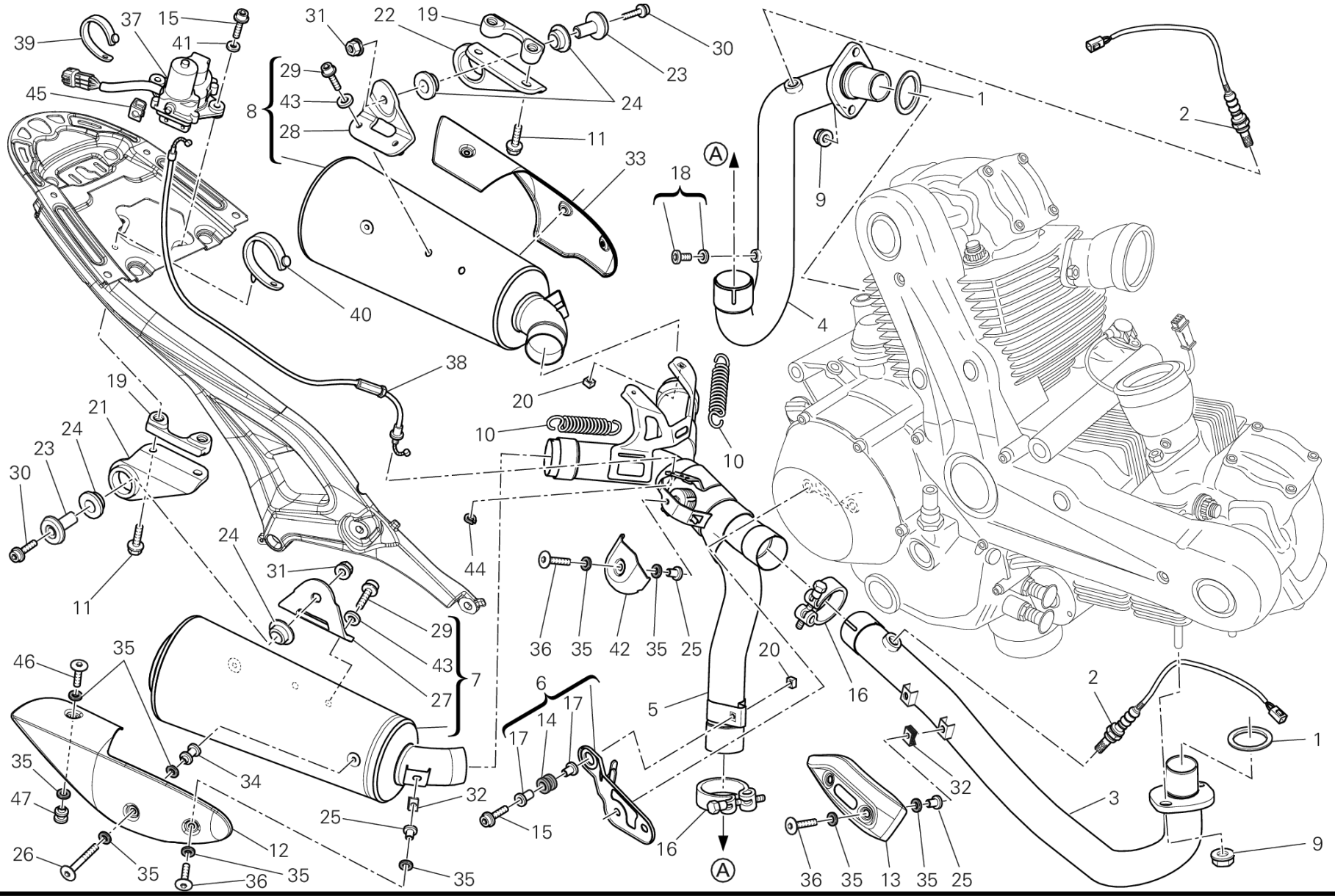
39
37
15
41
45
31
22
19
30
23
24
29
43
28
8
11
33
18
A
1
2
9
40
4
38
20
10
10
19
21
24
23
30
11
24
31
44
29
43
27
7
36
35
42
35
25
20
16
46
35
6
17
14
17
5
2
1
35
34
32
47
25
15
16
32
3
26
12
35
36
35
35
A
36
35
13
35
25
9

POS.	CODE	DESCRIPTION	QTY	START DATE	END DATE	VALIDITY	NOTES
35	85210721A	WASHER	18	23/02/2012		DFR:N;MOD:M796 ABS;XST:AUS,EUR,JAP	
36	77210893B	SCREW TBEI M6X14	5	23/02/2012		DFR:N;MOD:M796 ABS;XST:AUS,EUR,JAP	
37	59340301A	ELECTRIC MOTOR, EXHAUST VALVE	1	23/02/2012		DFR:N;MOD:M796 ABS;XST:AUS,EUR,JAP	
38	73210261A	CABLE, EXHAUST VALVE	1	23/02/2012		DFR:N;MOD:M796 ABS;XST:AUS,EUR,JAP	
39	74110131A	CLAMP, RUBBER 82MM	1	23/02/2012		DFR:N;MOD:M796 ABS;XST:AUS,EUR,JAP	
40	74110101A	CLAMP 70MM	1	23/02/2012		DFR:N;MOD:M796 ABS;XST:AUS,EUR,JAP	
41	85211601B	WASHER 6.4X14X1.2	2	01/03/2012		DFR:N;MOD:M796 ABS;XST:AUS,EUR,JAP	
42	24612041B	EXHAUST VALVE COVER	1	23/02/2012		DFR:N;MOD:M796 ABS;XST:AUS,EUR,JAP	
43	85250041C	WASHER 8.4X17X1.6	4	01/01/2001		DFR:N;MOD:M796 ABS;XST:AUS,EUR,JAP	
44	88450031A	CIRCLIP E-TYPE	1	23/02/2012		DFR:N;MOD:M796 ABS;XST:AUS,EUR,JAP	
45	75910251A	SPRING	1	01/03/2012		DFR:N;MOD:M796 ABS;XST:AUS,EUR,JAP	
46	77210971B	SCREW	2	23/02/2012		DFR:N;MOD:M796 ABS;XST:AUS,EUR,JAP	
47	71614231A	SPACER 6.2X8X16	2	23/02/2012		DFR:N;MOD:M796 ABS;XST:AUS,EUR,JAP	

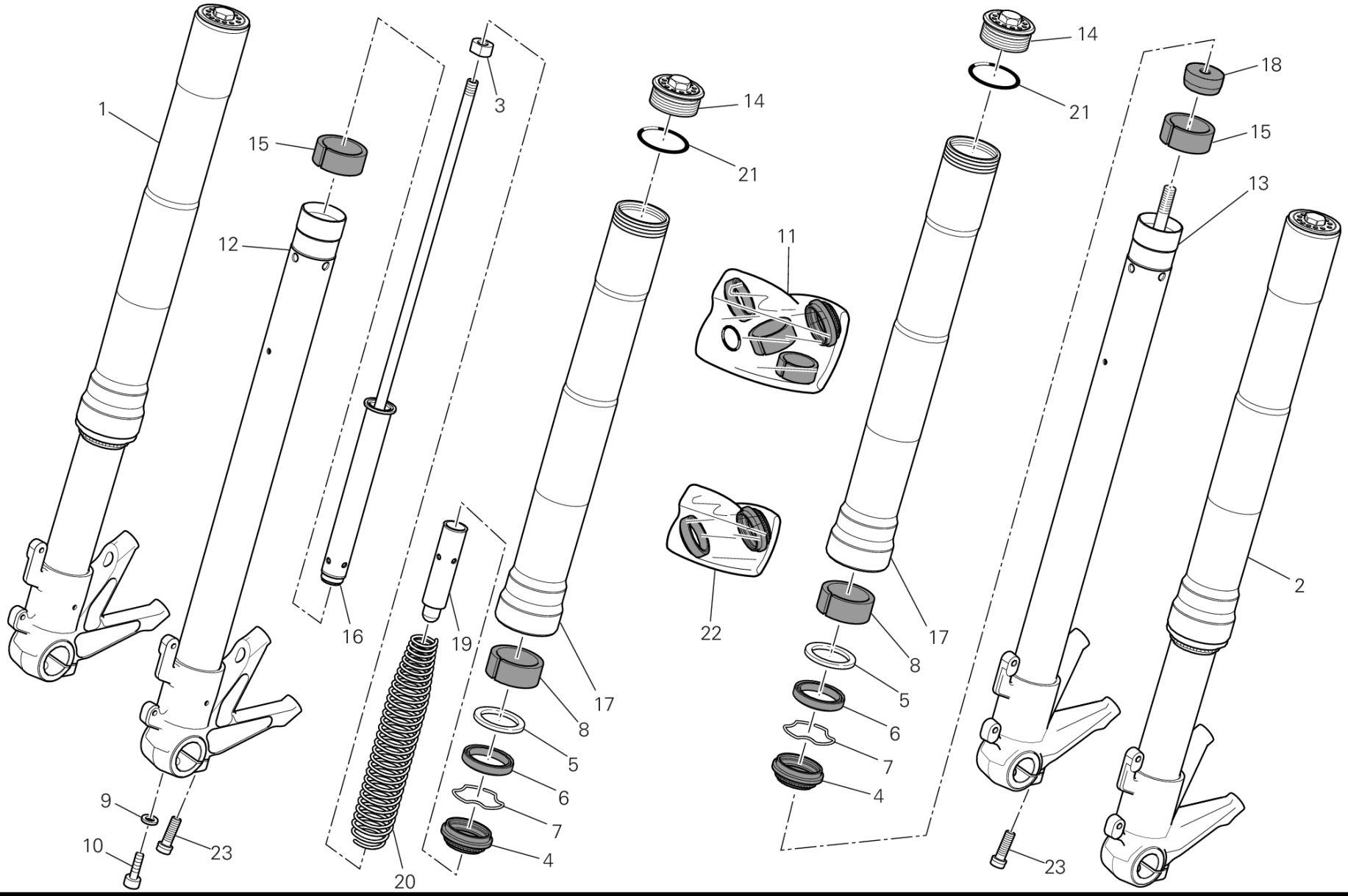
1
15
12
3
14
21
11
14
21
18
15
13
2
16
19
17
8
5
6
7
4
22
17
8
5
6
7
4
9
10
23
20
23

DRAWING 024 - FRONT FORK [MOD:M796 ABS;XST:AUS,EUR,JAP]

GROUP FRAME

POS.	CODE	DESCRIPTION	QTY	START DATE	END DATE	VALIDITY	NOTES
1	34420461A	FORK LEG ASSY, RIGHT	1	01/03/2012		DFR:N;MOD:M796 ABS;XST:AUS,EUR,JAP	
2	34520461A	FORK LEG ASSY, LEFT	1	01/03/2012		DFR:N;MOD:M796 ABS;XST:AUS,EUR,JAP	
3	34913621A	NUT	1	24/03/2011		DFR:N;MOD:M796 ABS;XST:AUS,EUR,JAP	
4	34913531A	DUST COVER	2	20/04/2011		DFR:N;MOD:M796 ABS;XST:AUS,EUR,JAP	
5	34913561A	WASHER	2	24/03/2011		DFR:N;MOD:M796 ABS;XST:AUS,EUR,JAP	
6	34913551A	SEAL RING	2	20/04/2011		DFR:N;MOD:M796 ABS;XST:AUS,EUR,JAP	
7	34913541A	STOP RING	2	24/03/2011		DFR:N;MOD:M796 ABS;XST:AUS,EUR,JAP	
8	34913571A	LOWER BUSH	2	20/04/2011		DFR:N;MOD:M796 ABS;XST:AUS,EUR,JAP	
9	34913601A	WASHER	1	24/03/2011		DFR:N;MOD:M796 ABS;XST:AUS,EUR,JAP	
10	34913611A	SCREW	1	24/03/2011		DFR:N;MOD:M796 ABS;XST:AUS,EUR,JAP	
11	34921041A	OVERHAUL KIT	1	24/03/2011		DFR:N;MOD:M796 ABS;XST:AUS,EUR,JAP	
12	34921001A	COMPLETE RIGHT SLIDER	1	24/03/2011		DFR:N;MOD:M796 ABS;XST:AUS,EUR,JAP	
13	34921011A	COMPLETE LEFT SLIDER	1	24/03/2011		DFR:N;MOD:M796 ABS;XST:AUS,EUR,JAP	
14	34913661A	PLUG	2	24/03/2011		DFR:N;MOD:M796 ABS;XST:AUS,EUR,JAP	
15	34913581A	UPPER BUSHING	2	20/04/2011		DFR:N;MOD:M796 ABS;XST:AUS,EUR,JAP	
16	34913591A	PLUNGER ASSY	1	24/03/2011		DFR:N;MOD:M796 ABS;XST:AUS,EUR,JAP	
17	34913521A	STANCHION TUBE	2	24/03/2011		DFR:N;MOD:M796 ABS;XST:AUS,EUR,JAP	

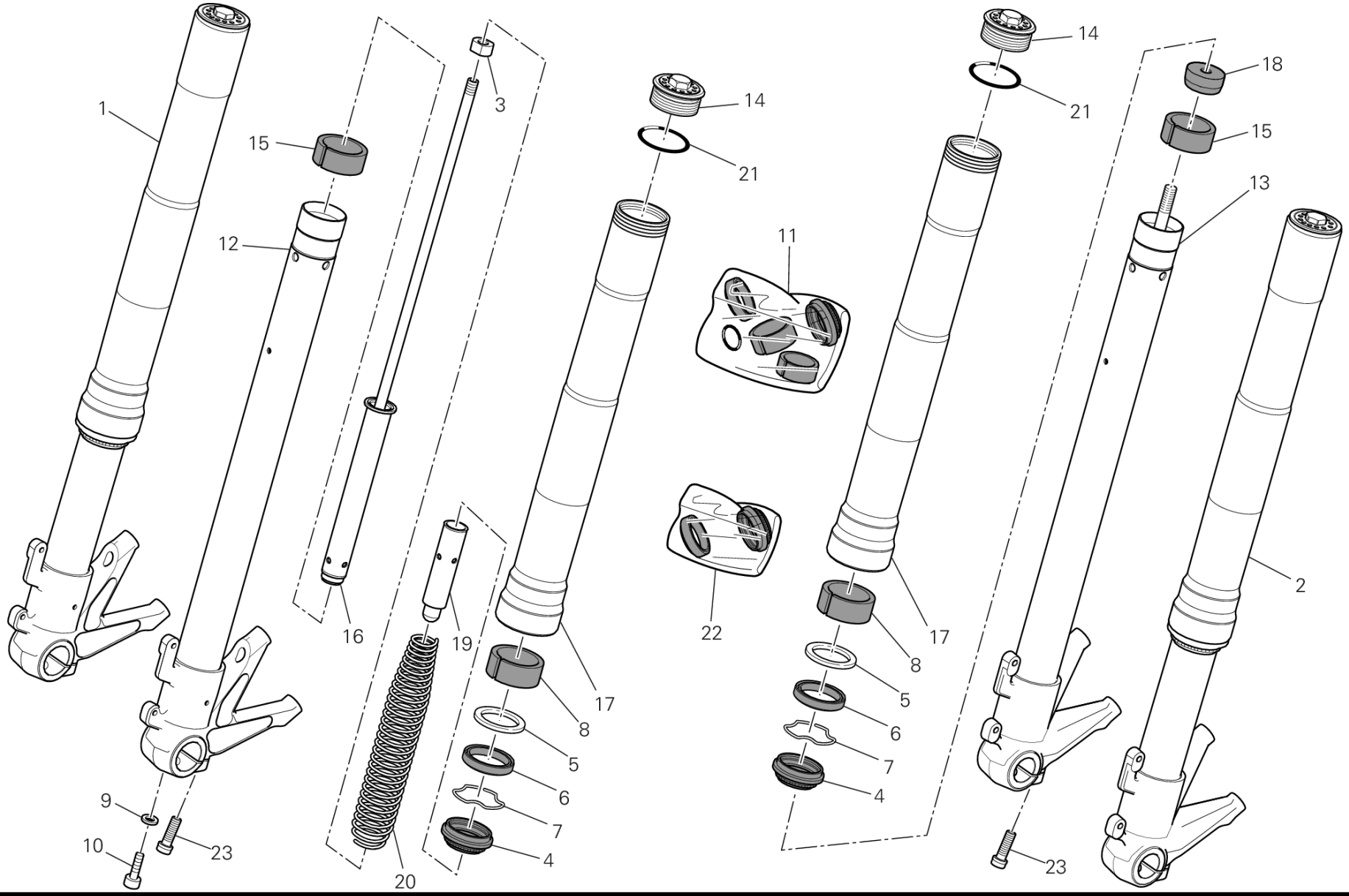
1
15
12
3
16
19
20
14
21
11
22
17
8
5
6
7
4
9
10
23
14
21
18
15
13
2
17
8
5
6
7
4
23

POS.	CODE	DESCRIPTION	QTY	START DATE	END DATE	VALIDITY	NOTES
18	34913651A	RUBBER PAD	1	24/03/2011		DFR:N;MOD:M796 ABS;XST:AUS,EUR,JAP	
19	34913641A	PRELOAD TUBE	1	24/03/2011		DFR:N;MOD:M796 ABS;XST:AUS,EUR,JAP	
20	34913631A	SPRING	1	24/03/2011		DFR:N;MOD:M796 ABS;XST:AUS,EUR,JAP	
21	34913671A	O-RING	2	24/03/2011		DFR:N;MOD:M796 ABS;XST:AUS,EUR,JAP	
22	34921051A	SEAT KIT	1	24/03/2011		DFR:N;MOD:M796 ABS;XST:AUS,EUR,JAP	
23	77157258B	SCREW TCEIF M8X25	4	01/03/2012		DFR:N;MOD:M796 ABS;XST:AUS,EUR,JAP	

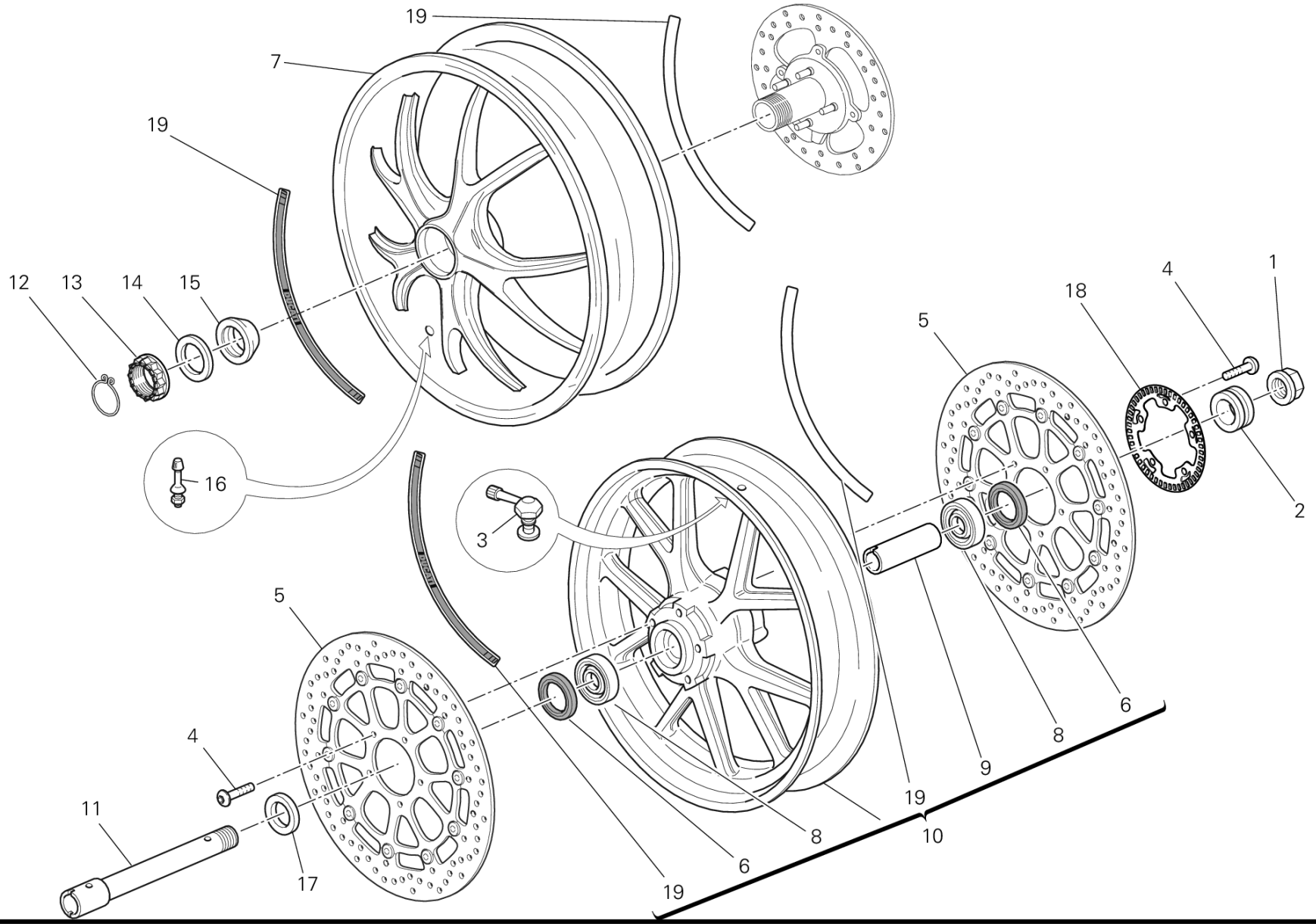
19
7
19
12
13
14
15
16
3
5
4
11
17
19
6
8
19
10
9
8
6
5
18
4
1
2

POS.	CODE	DESCRIPTION	QTY	START DATE	END DATE	VALIDITY	NOTES
1	74810141C	NUT M25X1.25	1	23/02/2012		DFR:N;MOD:M796 ABS;XST:AUS,EUR,JAP	
2	71311973A	LEFT SPACER	1	23/02/2012		DFR:N;MOD:M796 ABS;XST:AUS,EUR,JAP	
3	49720012A	VALVE, TUBELESS TIRE	1	01/01/2009		DFR:N;MOD:M796 ABS;XST:AUS,EUR,JAP	
4	77913991A	SCREW M8X20	10	01/01/2009		DFR:N;MOD:M796 ABS;XST:AUS,EUR,JAP	
5	49241011A	FRONT BRAKE DISC	2	01/01/2009		DFR:N;MOD:M796 ABS;XST:AUS,EUR,JAP	
6	93041501A	SEAL RING	2	24/12/2009		DFR:N;MOD:M796 ABS;XST:AUS,EUR,JAP	
7	50211331AB	REAR WHEEL BLACK	1	23/02/2012		DFR:N;MOD:M796 ABS;XST:AUS,EUR,JAP	
8	70250621A	BEARING	2	24/12/2009		DFR:N;MOD:M796 ABS;XST:AUS,EUR,JAP	
9	71410941A	INNER SPACER	1	24/12/2009		DFR:N;MOD:M796 ABS;XST:AUS,EUR,JAP	
10	50121301AB	FRONT WHEEL BLACK	1	01/01/2009		DFR:N;MOD:M796 ABS;XST:AUS,EUR,JAP	
11	81910431A	FRONT WHEEL SPINDLE	1	23/02/2012		DFR:N;MOD:M796 ABS;XST:AUS,EUR,JAP	
12	75910091A	RETAINER 40MM	1	23/02/2012		DFR:N;MOD:M796 ABS;XST:AUS,EUR,JAP	
13	75011591AA	NUT	1	23/02/2012		DFR:N;MOD:M796 ABS;XST:AUS,EUR,JAP	
14	85210571A	WASHER	1	23/02/2012		DFR:N;MOD:M796 ABS;XST:AUS,EUR,JAP	
15	71410271A	WASHER, CONICAL SPRING	1	23/02/2012		DFR:N;MOD:M796 ABS;XST:AUS,EUR,JAP	
16	49720031A	VALVE, TUBELESS TIRE	1	01/01/2009		DFR:N;MOD:M796 ABS;XST:AUS,EUR,JAP	
17	71311961A	RIGHT SPACER	1	23/02/2012		DFR:N;MOD:M796 ABS;XST:AUS,EUR,JAP	

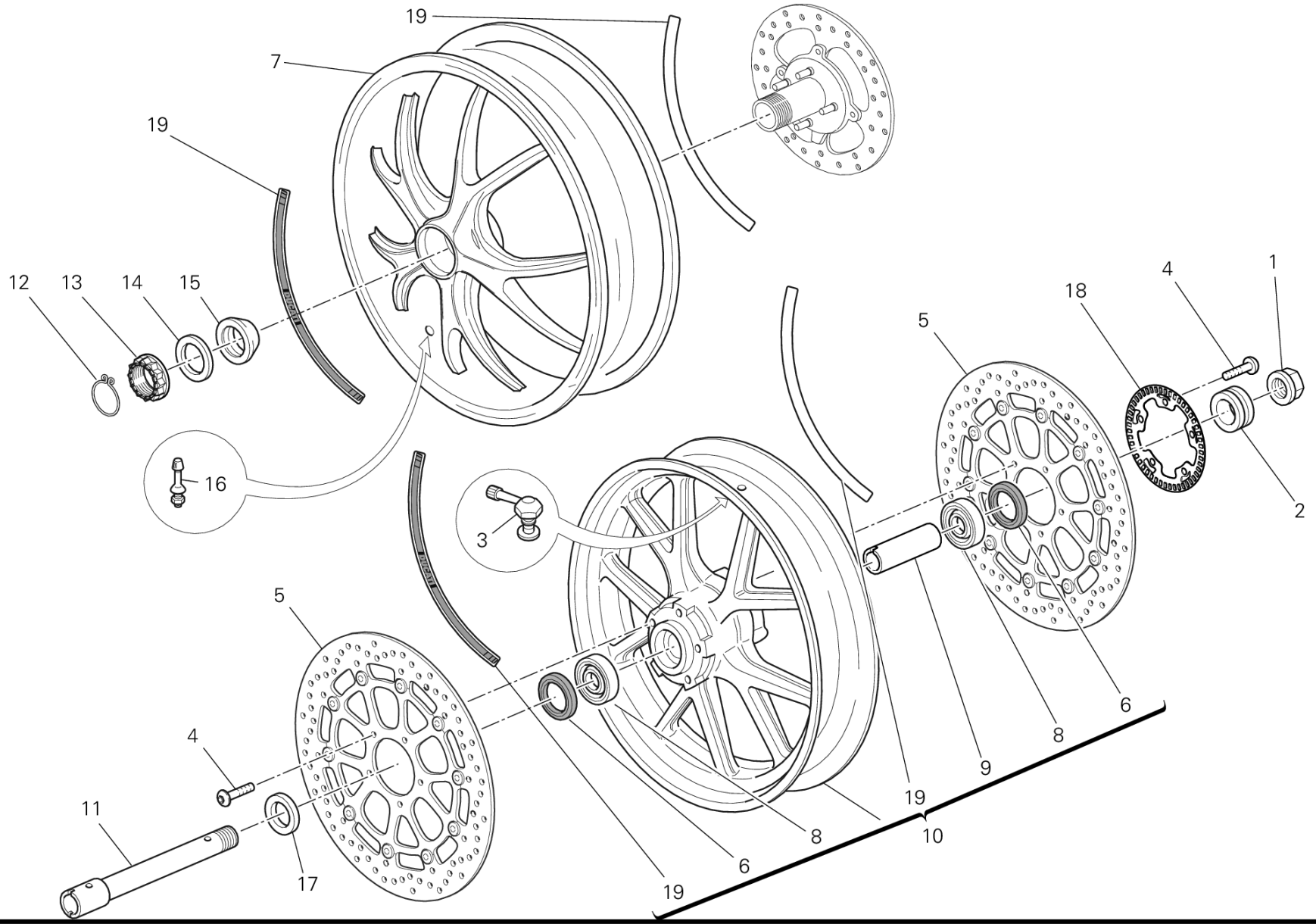
19
7
19
12
13
14
15
16
3
5
18
4
1
2
6
8
9
10
19
5
4
11
17
6
19

POS.	CODE	DESCRIPTION	QTY	START DATE	END DATE	VALIDITY	NOTES
18	50410051A	FRONT PHONIC WHEEL	1	01/01/2009		DFR:N;MOD:M796 ABS;XST:AUS,EUR,JAP	
19	43814721A	STICKER "DUCATI"	4	10/02/2010		DFR:N;MOD:M796 ABS;XST:AUS,EUR,JAP	

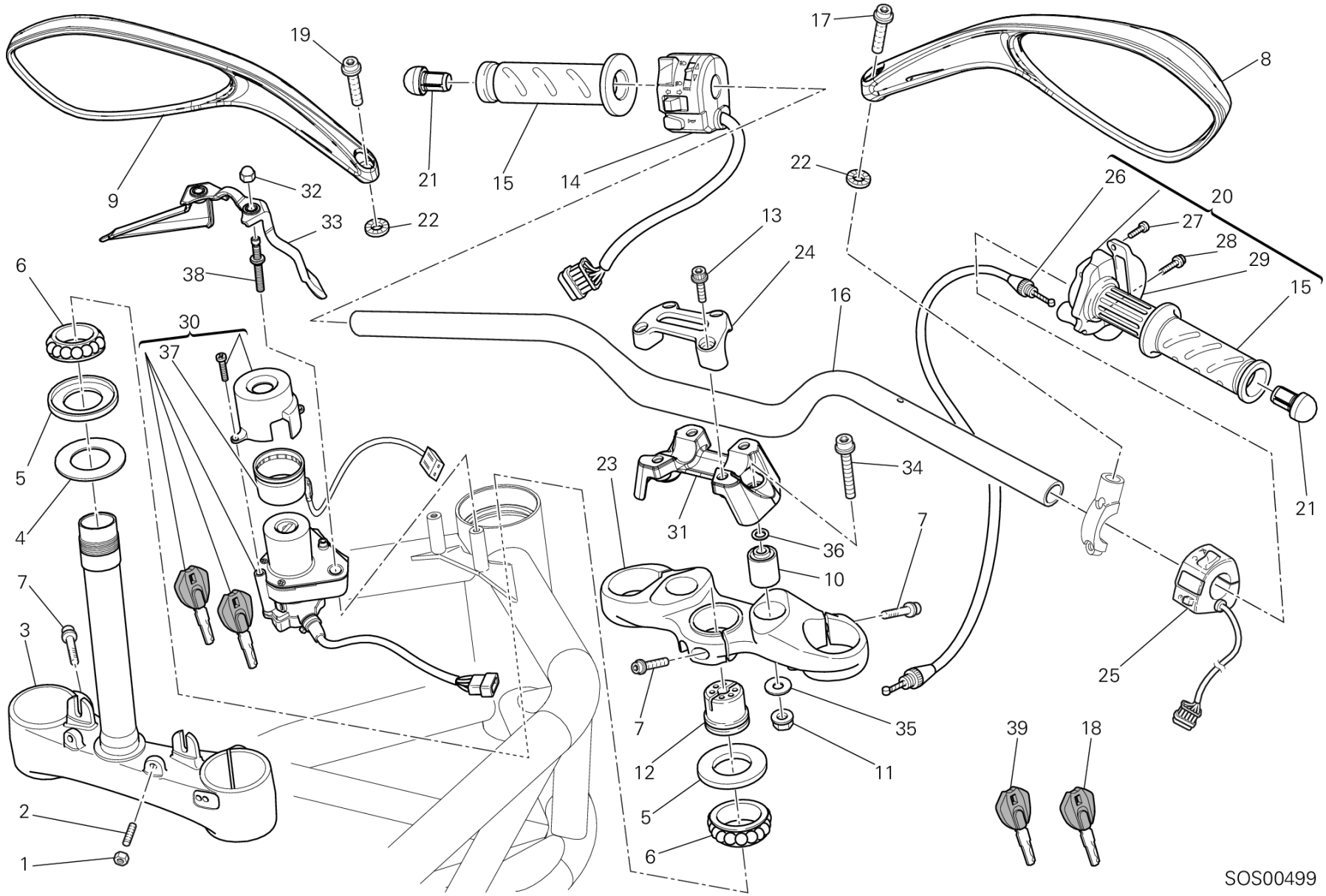
SOS00499

DRAWING 026 - HANDLEBAR [MOD:M796 ABS;XST:AUS,EUR,JAP]

GROUP FRAME

POS.	CODE	DESCRIPTION	QTY	START DATE	END DATE	VALIDITY	NOTES
1	74750071A	NUT	2	23/02/2012		DFR:N;MOD:M796 ABS;XST:AUS,EUR,JAP	
2	77850281A	THREADED DOWEL STEI M8X25	2	23/02/2012		DFR:N;MOD:M796 ABS;XST:AUS,EUR,JAP	
3	34220543A	STEERING CROWN WITH PIN	1	01/03/2012		DFR:N;MOD:M796 ABS;XST:AUS,EUR,JAP	
4	85211031A	WASHER	1	23/02/2012		DFR:N;MOD:M796 ABS;XST:AUS,EUR,JAP	
5	93010041B	SEAL RING	2	23/02/2012		DFR:N;MOD:M796 ABS;XST:AUS,EUR,JAP	
6	70241231A	BEARING, STEERING NTN SF07A17P	2	23/02/2012		DFR:N;MOD:M796 ABS;XST:AUS,EUR,JAP	
7	77157258B	SCREW TCEIF M8X25	7	01/03/2012		DFR:N;MOD:M796 ABS;XST:AUS,EUR,JAP	
8	52340222A	RIGHT MIRROR	1	24/12/2009		DFR:N;MOD:M796 ABS;XST:AUS,EUR,JAP	
9	52340232A	LEFT MIRROR	1	24/12/2009		DFR:N;MOD:M796 ABS;XST:AUS,EUR,JAP	
10	70010541A	CUSHION, HANDLEBAR	2	24/12/2009		DFR:N;MOD:M796 ABS;XST:AUS,EUR,JAP	
11	74840241AB	NUT M10X1.25X10	2	01/03/2012		DFR:N;MOD:M796 ABS;XST:AUS,EUR,JAP	
12	70310131A	THREAD, STEERING HEAD TOP	1	23/02/2012		DFR:N;MOD:M796 ABS;XST:AUS,EUR,JAP	
13	77157278B	SCREW TCEIF M8X30	4	01/03/2012		DFR:N;MOD:M796 ABS;XST:AUS,EUR,JAP	
14	65110101A	LEFT HANDLE SWITCH	1	01/03/2012		DFR:N;MOD:M796 ABS;XST:AUS,EUR,JAP	
15	65620121A	GRIPS, PAIR	1			MOD:M796 ABS;XST:AUS,EUR,JAP	
16	36011283B	HANDLEBAR	1	01/03/2012		DFR:N;MOD:M796 ABS;XST:AUS,EUR,JAP	
17	77113731A	SCREW TCEIF M8X25, LEFT THREAD	1	23/02/2012		DFR:N;MOD:M796 ABS;XST:AUS,EUR,JAP	
18	59840291A	KEY, NON INDENTED WITHOUT TRANSPONDER	1	07/06/2011		DFR:N;MOD:M796 ABS;XST:AUS,EUR,JAP	

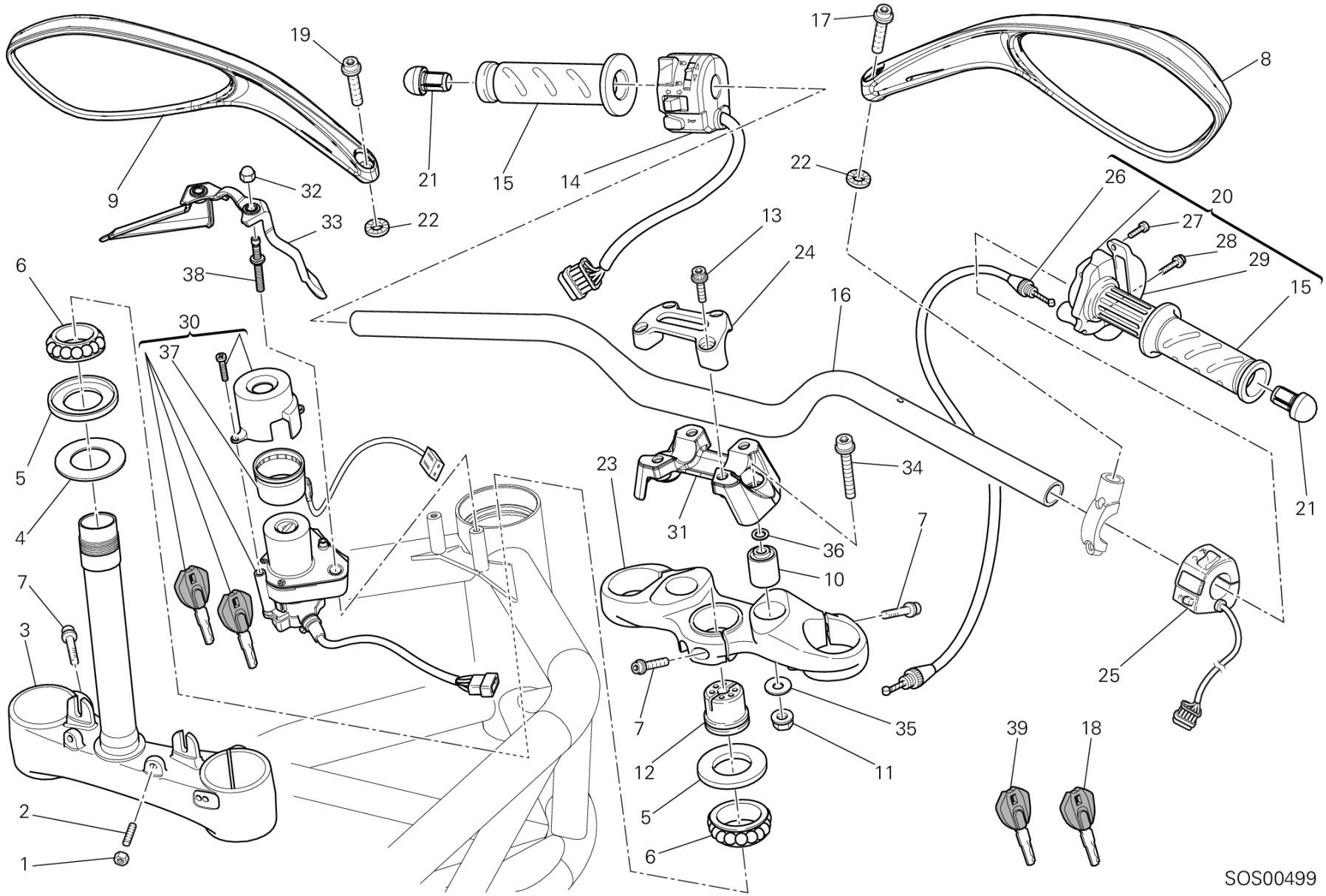
19
17
8
9
21
15
14
22
32
33
22
26
20
27
28
29
15
13
24
16
6
38
30
37
5
4
23
34
31
36
10
7
21
7
3
25
7
35
39
18
12
11
5
2
6
1
SOS00499

POS.	CODE	DESCRIPTION	QTY	START DATE	END DATE	VALIDITY	NOTES
19	77113741A	SCREW TCEIF M8X25	1	23/02/2012		DFR:N;MOD:M796 ABS;XST:AUS,EUR,JAP	
20	65420321A	THROTTLE CONTROL	1	24/12/2009		DFR:N;MOD:M796 ABS;XST:AUS,EUR,JAP	
21	87210581A	BALANCER SET, HANDLE BAR	1	01/03/2012		DFR:N;MOD:M796 ABS;XST:AUS,EUR,JAP	
22	46210021A	SPRING WASHER 8 MM	2	23/02/2012		DFR:N;MOD:M796 ABS;XST:AUS,EUR,JAP	
23	34110681A	STEERING HEAD	1	01/03/2012		DFR:N;MOD:M796 ABS;XST:AUS,EUR,JAP	
24	36010891AA	HANDLEBAR BRACKET, UPPER	1	01/03/2012		DFR:N;MOD:M796 ABS;XST:AUS,EUR,JAP	
25	65010071C	SWITCH	1	23/02/2012		DFR:N;MOD:M796 ABS;XST:AUS,EUR,JAP	
26	65610951A	THROTTLE CONTROL TRANSMISSION	1	24/12/2009		DFR:N;MOD:M796 ABS;XST:AUS,EUR,JAP	
27	800066774	SCREW TCIC M4X0.7X8	2	24/12/2009		DFR:N;MOD:M796 ABS;XST:AUS,EUR,JAP	
28	77251018B	SCREW TEF M6X20	2	24/12/2009		DFR:N;MOD:M796 ABS;XST:AUS,EUR,JAP	
29	65840021B	CAP, GRIP UPPER	1	24/12/2009		DFR:N;MOD:M796 ABS;XST:AUS,EUR,JAP	
30	65240211A	MAIN SWITCH	1	07/06/2011		DFR:N;MOD:M796 ABS;XST:AUS,EUR,JAP	
31	36011271AA	SINGLE U-BOLT BOTTOM	1	01/03/2012		DFR:N;MOD:M796 ABS;XST:AUS,EUR,JAP	
32	74910021A	NUT, CAP M6	2	23/02/2012		DFR:N;MOD:M796 ABS;XST:AUS,EUR,JAP	
33	24713631A	COVER ABS	1	23/02/2012		DFR:N;MOD:M796 ABS;XST:AUS,EUR,JAP	
34	77159418B	SCREW M10X1.25X70	2	01/03/2012		DFR:N;MOD:M796 ABS;XST:AUS,EUR,JAP	
35	85210491B	WASHER 10.5X28X1.5	2	01/03/2012		DFR:N;MOD:M796 ABS;XST:AUS,EUR,JAP	

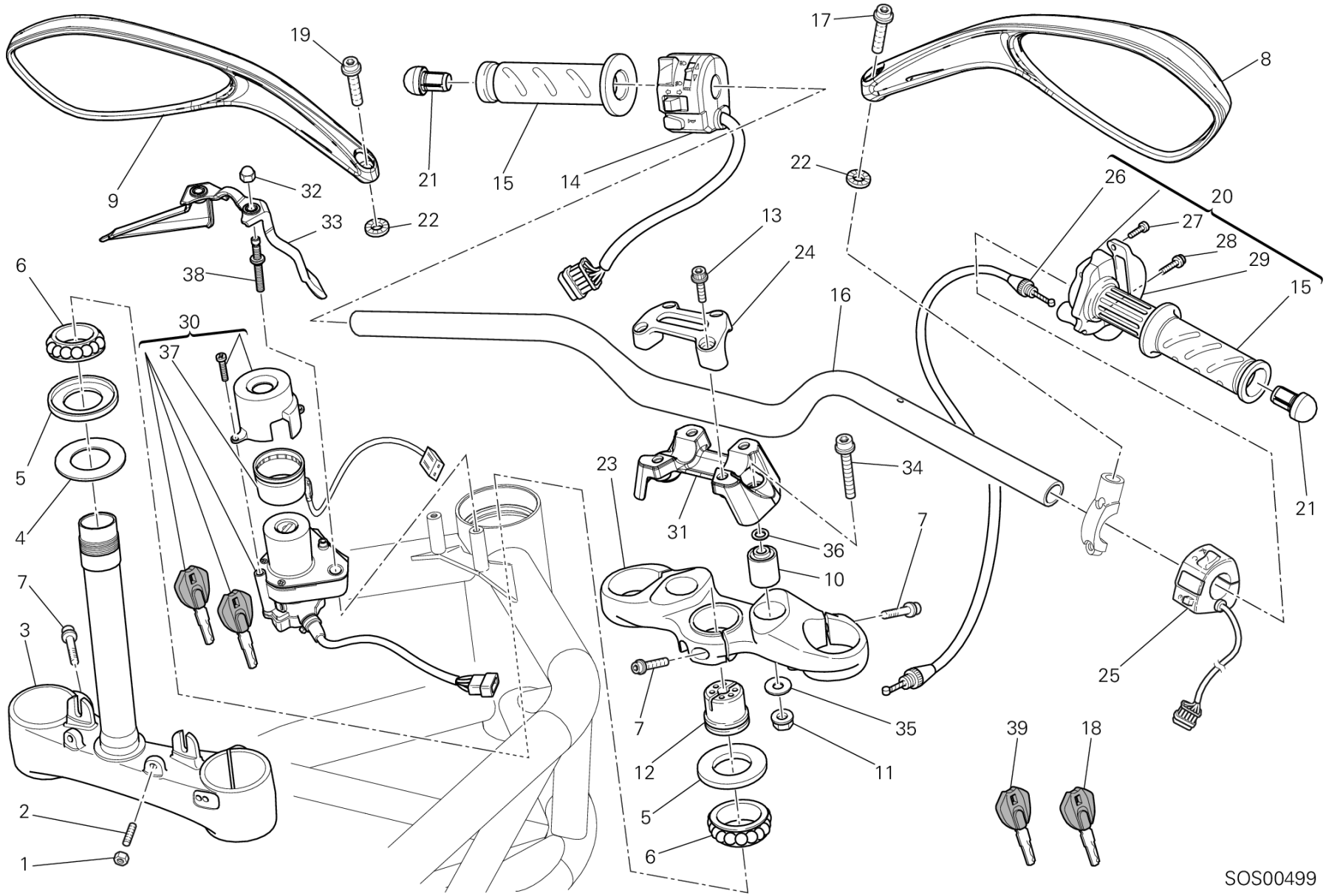
19
17
8
9
21
15
14
22
32
33
22
26
20
27
28
29
15
13
24
16
6
38
30
37
5
4
23
34
31
36
10
7
21
7
3
25
7
35
39
18
12
11
5
2
6
1
SOS00499

POS.	CODE	DESCRIPTION	QTY	START DATE	END DATE	VALIDITY	NOTES
36	85250401A	WASHER 10.5X18X1.6	2	01/03/2012		DFR:N;MOD:M796 ABS;XST:AUS,EUR,JAP	
37	51840051B	COIL ANTENNA, IMMOBILIZER	1	07/06/2011		DFR:N;MOD:M796 ABS;XST:AUS,EUR,JAP	
38	77915371A	SCREW, SPECIAL	2	23/02/2012		DFR:N;MOD:M796 ABS;XST:AUS,EUR,JAP	
39	59840341A	WRENCH WITH TRANSPONDER	1	07/06/2011		DFR:N;MOD:M796 ABS;XST:AUS,EUR,JAP	

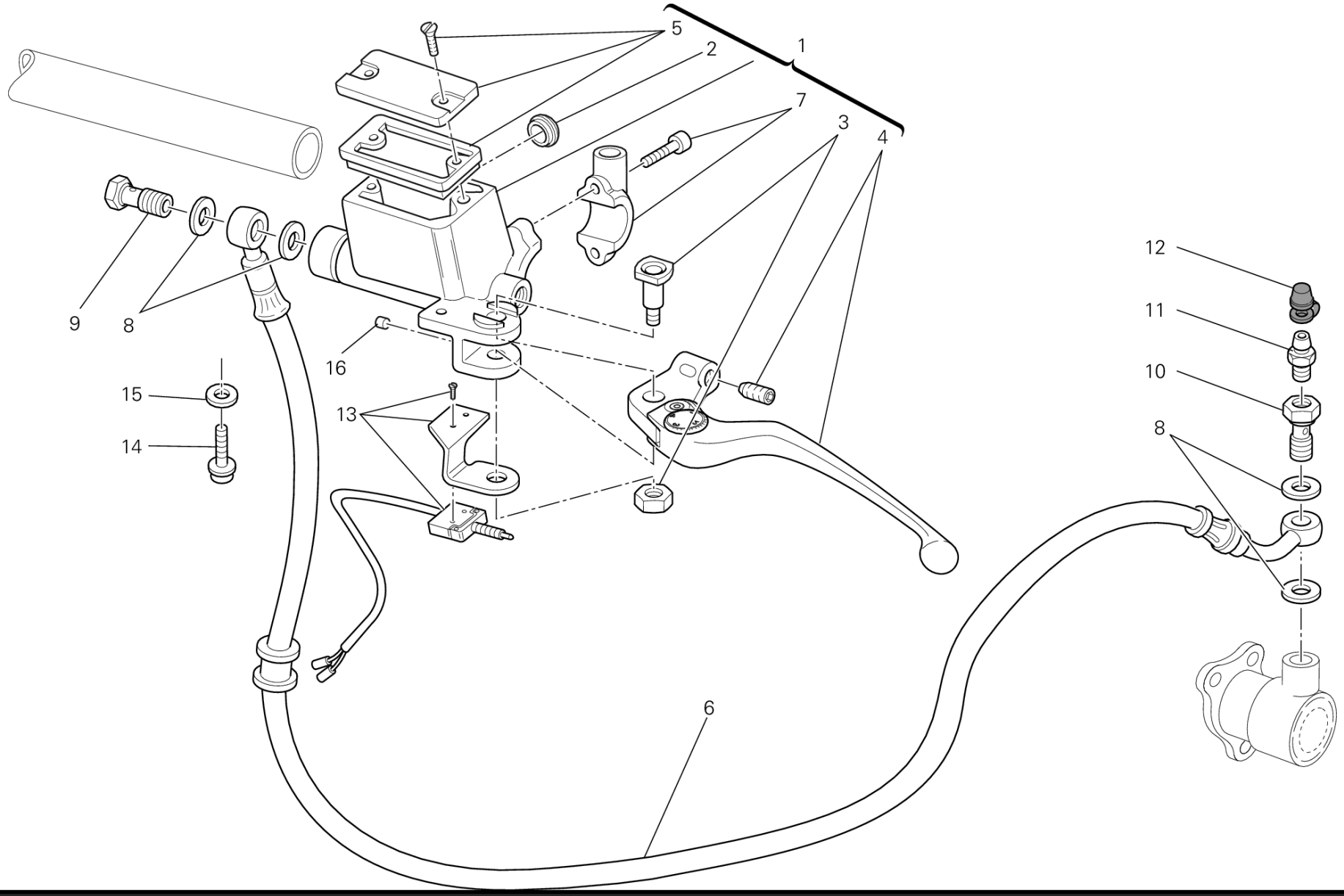
5
2
1
7
3
4
9
8
16
15
14
13
12
11
10
8
6

DRAWING 027 - CLUTCH MASTER CYLINDER [MOD:M796 ABS;XST:AUS,EUR,JAP]

GROUP FRAME

POS.	CODE	DESCRIPTION	QTY	START DATE	END DATE	VALIDITY	NOTES
1	63040511A	CLUTCH MASTER CYLINDER	1	24/12/2009		DFR:N;MOD:M796 ABS;XST:AUS,EUR,JAP	
2	000049654	WINDOW, OIL LEVEL CHECK	1			MOD:M796 ABS;XST:AUS,EUR,JAP	
3	62640601A	BOLT, PIVOT	1			MOD:M796 ABS;XST:AUS,EUR,JAP	
4	62640711A	CLUTCH LEVER	1			MOD:M796 ABS;XST:AUS,EUR,JAP	
5	89340101A	CAP BRAKE FLUID TANK	1			MOD:M796 ABS;XST:AUS,EUR,JAP	
6	63210541A	CLUTCH CONTROL PIPE METAL PLAITED	1	24/12/2009		DFR:N;MOD:M796 ABS;XST:AUS,EUR,JAP	
7	62640611A	BRACKET, CLUTCH MASTER CYLINDER	1			MOD:M796 ABS;XST:AUS,EUR,JAP	
8	85250241A	WASHER 10X14X1	4	24/12/2009		DFR:N;MOD:M796 ABS;XST:AUS,EUR,JAP	
9	77913661AB	BOLT, BRAKE HOSE M10X1	1	24/12/2009		DFR:N;MOD:M796 ABS;XST:AUS,EUR,JAP	
10	77913971A	BOLT, BRAKE HOSE	1	26/04/2010		DFR:N;MOD:M796 ABS;XST:AUS,EUR,JAP	
11	18710021A	VALVE, BREATHER	1	24/12/2009		DFR:N;MOD:M796 ABS;XST:AUS,EUR,JAP	
12	61240052A	DUST COVER	1	24/12/2009		DFR:N;MOD:M796 ABS;XST:AUS,EUR,JAP	
13	53940341A	SWITCH, CLUTCH	1			MOD:M796 ABS;XST:AUS,EUR,JAP	
14	77110391A	SCREW TCEIF M6X16	1	01/03/2012		DFR:N;MOD:M796 ABS;XST:AUS,EUR,JAP	
15	85211761A	WASHER 6.4X12.5X1.6	1	01/03/2012		DFR:N;MOD:M796 ABS;XST:AUS,EUR,JAP	
16	19540021A	RUBBER PAD	1			MOD:M796 ABS;XST:AUS,EUR,JAP	

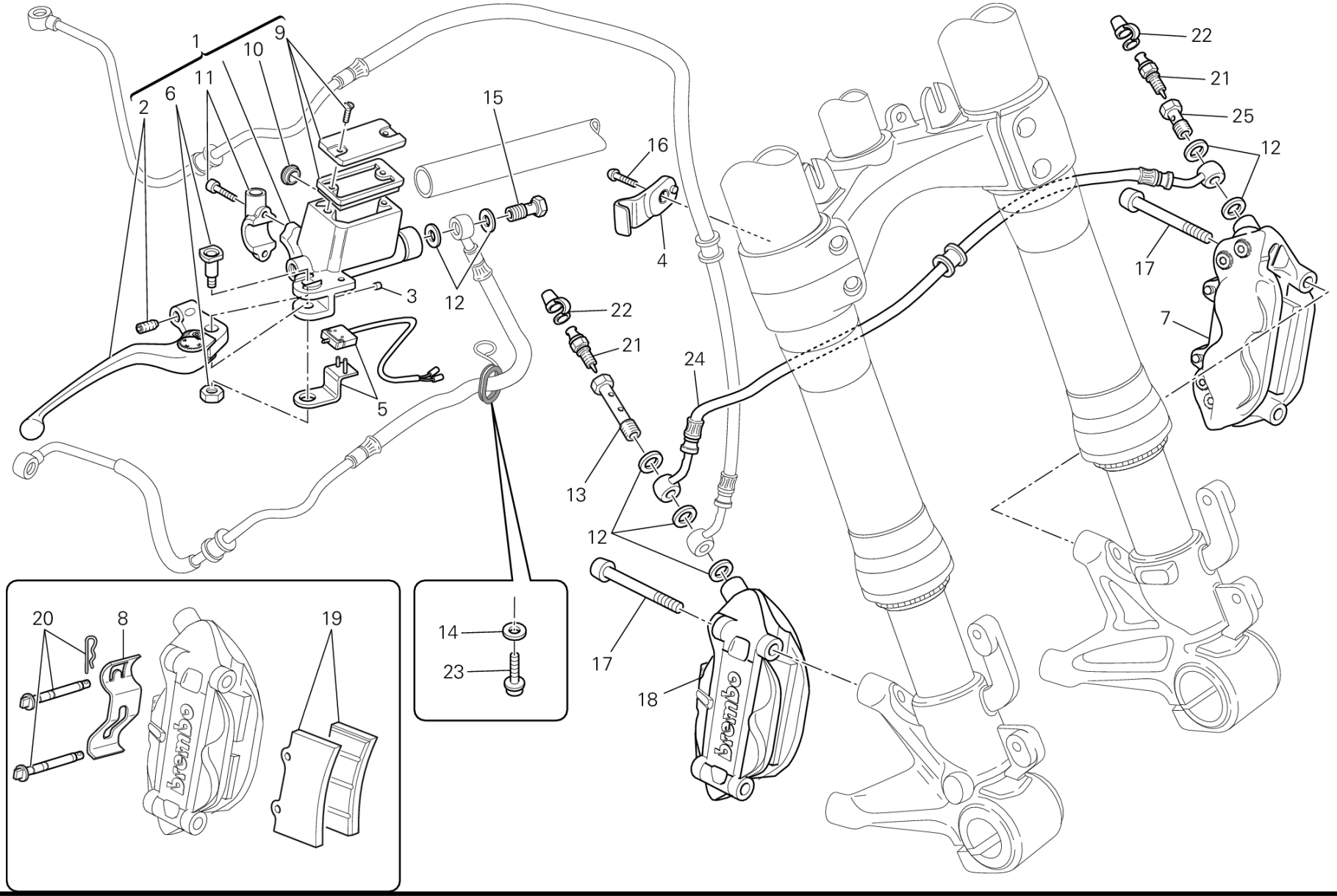
1
9
10
11
6
2
15
16
4
3
12
5
22
21
24
13
12
17
18
22
21
25
12
17
7
20
8
19
14
23
brembo
brembo

POS.	CODE	DESCRIPTION	QTY	START DATE	END DATE	VALIDITY	NOTES
1	62440651A	FRONT BRAKE PUMP	1	26/04/2010		DFR:N;MOD:M796 ABS;XST:AUS,EUR,JAP	
2	62640701A	LEVER, FRONT BRAKE	1	24/12/2009		DFR:N;MOD:M796 ABS;XST:AUS,EUR,JAP	
3	19540021A	RUBBER PAD	1			MOD:M796 ABS;XST:AUS,EUR,JAP	
4	83014791A	CLAMP, OIL HOSE	1	23/02/2012		DFR:N;MOD:M796 ABS;XST:AUS,EUR,JAP	
5	53940631A	MICROSWITCH	1	24/12/2009		DFR:N;MOD:M796 ABS;XST:AUS,EUR,JAP	
6	62640601A	BOLT, PIVOT	1			MOD:M796 ABS;XST:AUS,EUR,JAP	
7	61041031A	LEFT FRONT BRAKE CALIPER	1	26/04/2010		DFR:N;MOD:M796 ABS;XST:AUS,EUR,JAP	
8	61240171A	SPRING, PAD STOPPER	1			MOD:M796 ABS;XST:AUS,EUR,JAP	
9	89340091A	COVER MASTER CYLINDER	1			MOD:M796 ABS;XST:AUS,EUR,JAP	
10	000049655	WINDOW, OIL LEVEL CHECK	1			MOD:M796 ABS;XST:AUS,EUR,JAP	
11	62640591A	BRACKET, MASTER CYLINDER	1			MOD:M796 ABS;XST:AUS,EUR,JAP	
12	85250241A	WASHER 10X14X1	7	26/04/2010		DFR:N;MOD:M796 ABS;XST:AUS,EUR,JAP	
13	77914651A	BOLT, BRAKE HOSE	1	26/04/2010		DFR:N;MOD:M796 ABS;XST:AUS,EUR,JAP	
14	85211761A	WASHER 6.4X12.5X1.6	1	01/03/2012		DFR:N;MOD:M796 ABS;XST:AUS,EUR,JAP	
15	77914151A	BOLT, BRAKE HOSE	1	26/04/2010		DFR:N;MOD:M796 ABS;XST:AUS,EUR,JAP	
16	77510541A	SCREW TBEI M6X10	1	23/02/2012		DFR:N;MOD:M796 ABS;XST:AUS,EUR,JAP	
17	77913311D	SCREW M 10 X 60	4	23/02/2012		DFR:N;MOD:M796 ABS;XST:AUS,EUR,JAP	
18	61041041A	RIGHT FRONT BRAKE CALIPER	1	26/04/2010		DFR:N;MOD:M796 ABS;XST:AUS,EUR,JAP	
19	61340611A	FRONT BRAKE PADS SET	2			MOD:M796 ABS;XST:AUS,EUR,JAP	
20	61240141A	PAD PINS OVERHAUL KIT	1			MOD:M796 ABS;XST:AUS,EUR,JAP	
21	18710021A	VALVE, BREATHER	2	26/04/2010		DFR:N;MOD:M796 ABS;XST:AUS,EUR,JAP	

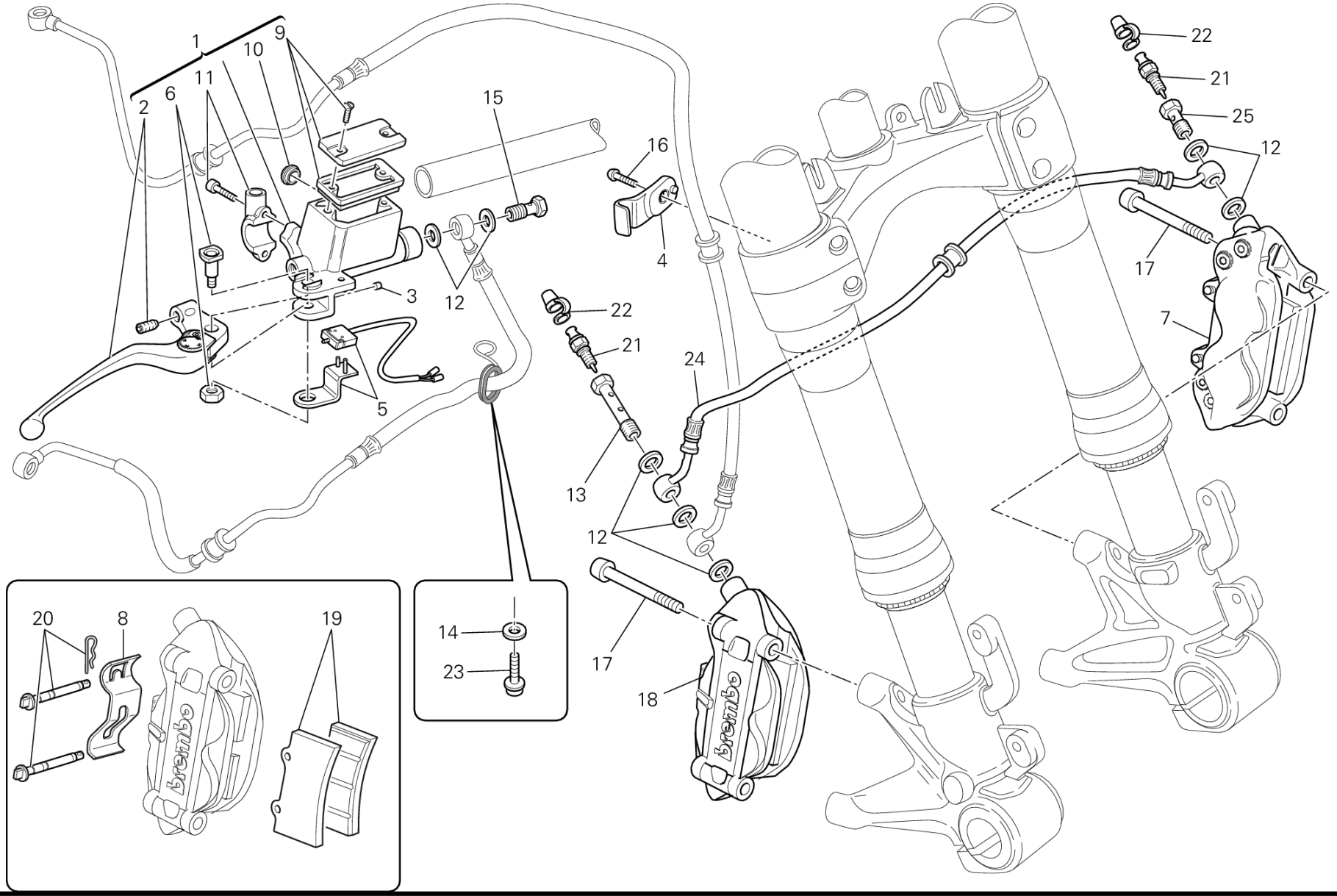
1
9
10
11
6
2
15
16
4
3
12
5
22
21
24
13
12
17
18
22
21
25
12
17
7
20
8
19
14
23
brembo
brembo

POS.	CODE	DESCRIPTION	QTY	START DATE	END DATE	VALIDITY	NOTES
22	61240052A	DUST COVER	2	26/04/2010		DFR:N;MOD:M796 ABS;XST:AUS,EUR,JAP	
23	77110391A	SCREW TCEIF M6X16	1	01/03/2012		DFR:N;MOD:M796 ABS;XST:AUS,EUR,JAP	
24	61840871A	HOSE, CALIPER CONNECTING	1	26/04/2010		DFR:N;MOD:M796 ABS;XST:AUS,EUR,JAP	
25	77913971A	BOLT, BRAKE HOSE	1	24/12/2009		DFR:N;MOD:M796 ABS;XST:AUS,EUR,JAP	

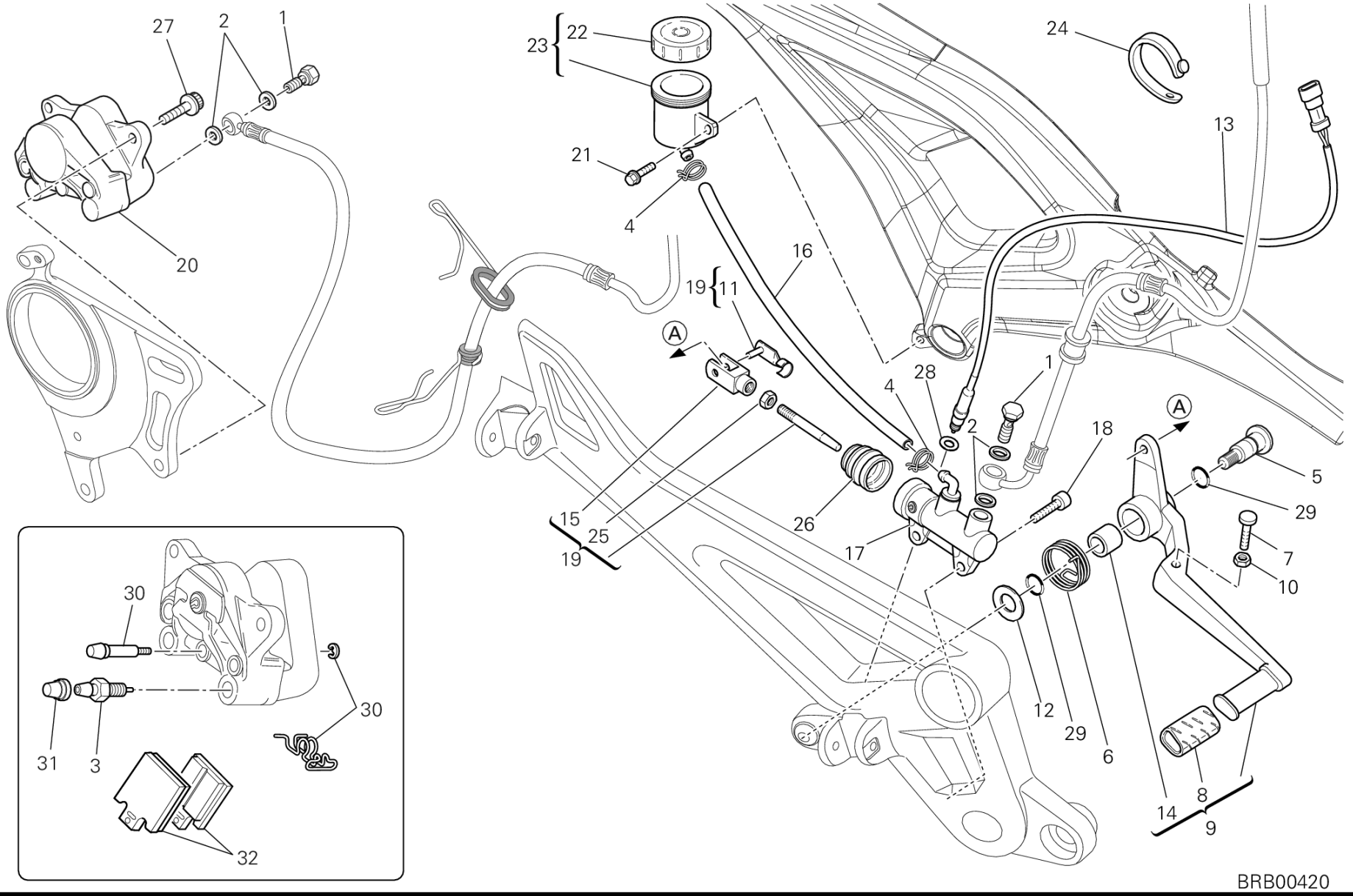
27
2
1
23
22
24
13
21
4
20
16
19
11
A
28
1
4
2
18
A
5
29
15
25
19
26
17
7
10
12
29
6
14
8
9
30
30
31
3
32
BRB00420

DRAWING 029 - REAR BRAKE SYSTEM [MOD:M796 ABS;XST:AUS,EUR,JAP]

GROUP FRAME

POS.	CODE	DESCRIPTION	QTY	START DATE	END DATE	VALIDITY	NOTES
1	77913661AB	BOLT, BRAKE HOSE M10X1	2	26/04/2010		DFR:N;MOD:M796 ABS;XST:AUS,EUR,JAP	
2	85250241A	WASHER 10X14X1	4	24/12/2009		DFR:N;MOD:M796 ABS;XST:AUS,EUR,JAP	
3	63140161A	FRONT CALIPER DRAIN SCREW	1			MOD:M796 ABS;XST:AUS,EUR,JAP	
4	74140431A	CLAMP	2	26/04/2010		DFR:N;MOD:M796 ABS;XST:AUS,EUR,JAP	
5	82111701B	PIN PEDAL	1	23/11/2010		DFR:N;MOD:M796 ABS;XST:AUS,EUR,JAP	
6	79914891B	SPRING	1	23/02/2012		DFR:N;MOD:M796 ABS;XST:AUS,EUR,JAP	
7	77912371B	SCREW	1	24/12/2009		DFR:N;MOD:M796 ABS;XST:AUS,EUR,JAP	
8	76410112A	COVER PEDAL	1	16/02/2010		DFR:N;MOD:M796 ABS;XST:AUS,EUR,JAP	
9	45720461AB	PEDAL, BRAKE	1	24/12/2009		DFR:N;MOD:M796 ABS;XST:AUS,EUR,JAP	
10	74750031A	NUT 6MM	1	24/12/2009		DFR:N;MOD:M796 ABS;XST:AUS,EUR,JAP	
11	85010151A	QUICK FASTENING	1	23/02/2012		DFR:N;MOD:M796 ABS;XST:AUS,EUR,JAP	
12	85211511A	WASHER	1	24/12/2009		DFR:N;MOD:M796 ABS;XST:AUS,EUR,JAP	
13	53940031C	SWITCH, STOP	1	24/12/2009		DFR:N;MOD:M796 ABS;XST:AUS,EUR,JAP	
14	71210341A	BUSH	1	16/02/2010		DFR:N;MOD:M796 ABS;XST:AUS,EUR,JAP	
15	18410051A	FORK HEADS DIN 71752	1	24/12/2009		DFR:N;MOD:M796 ABS;XST:AUS,EUR,JAP	
16	87711341A	HOSE 6.5X10.5X140	1	26/04/2010		DFR:N;MOD:M796 ABS;XST:AUS,EUR,JAP	
17	62540041A	REAR BRAKE PUMP	1	26/04/2010		DFR:N;MOD:M796 ABS;XST:AUS,EUR,JAP	
18	77110391A	SCREW TCEIF M6X16	2	23/02/2012		DFR:N;MOD:M796 ABS;XST:AUS,EUR,JAP	

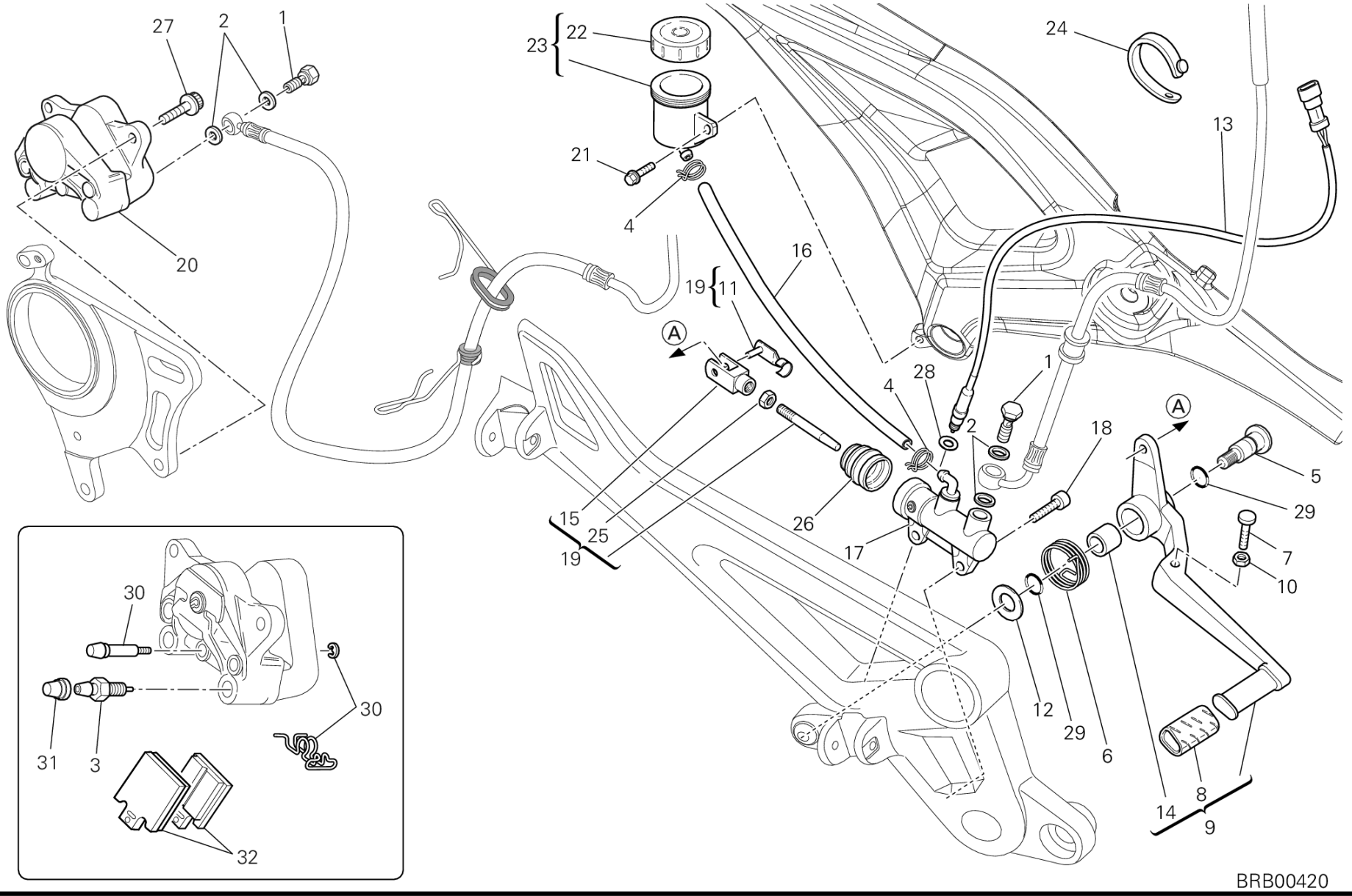
27
2
1
23
22
24
13
21
4
20
16
19
11
A
28
1
4
2
18
A
5
29
15
25
19
26
17
7
10
12
29
6
14
8
9
30
30
31
3
32
BRB00420

POS.	CODE	DESCRIPTION	QTY	START DATE	END DATE	VALIDITY	NOTES
19	11720611A	ROD, BRAKE	1	24/12/2009		DFR:N;MOD:M796 ABS;XST:AUS,EUR,JAP	
20	61140201A	REAR BRAKE CALIPER	1	26/04/2010		DFR:N;MOD:M796 ABS;XST:AUS,EUR,JAP	
21	77210591A	SCREW TEF M6X10	1	23/02/2012		DFR:N;MOD:M796 ABS;XST:AUS,EUR,JAP	
22	89340051A	COVER MASTER CYLINDER	1	24/12/2009		DFR:N;MOD:M796 ABS;XST:AUS,EUR,JAP	
23	58540011A	RESERVOIR, BRAKE FLUID	1	26/04/2010		DFR:N;MOD:M796 ABS;XST:AUS,EUR,JAP	
24	74110551A	CLAMP	2	05/06/2012		DFR:N;MOD:M796 ABS;PLT:DB10;XST:AUS,EUR,JAP	
25	74750051B	NUT	1	24/12/2009		DFR:N;MOD:M796 ABS;XST:AUS,EUR,JAP	
26	62640131A	DUST COVER	1			MOD:M796 ABS;XST:AUS,EUR,JAP	
27	77157238B	SCREW TCEIF M8X20	2	23/02/2012		DFR:N;MOD:M796 ABS;XST:AUS,EUR,JAP	
28	42020008A	COPPER GASKET 11X8.2X1	1	24/12/2009		DFR:N;MOD:M796 ABS;XST:AUS,EUR,JAP	
29	88641161A	O-RING	2	24/12/2009		DFR:N;MOD:M796 ABS;XST:AUS,EUR,JAP	
30	61240161A	PAD PINS OVERHAUL KIT	1			MOD:M796 ABS;XST:AUS,EUR,JAP	
31	61240081A	DUST PLUG	1			MOD:M796 ABS;XST:AUS,EUR,JAP	
32	61340381A	REAR BRAKE PADS SET	1	24/12/2009		DFR:N;MOD:M796 ABS;XST:AUS,EUR,JAP	

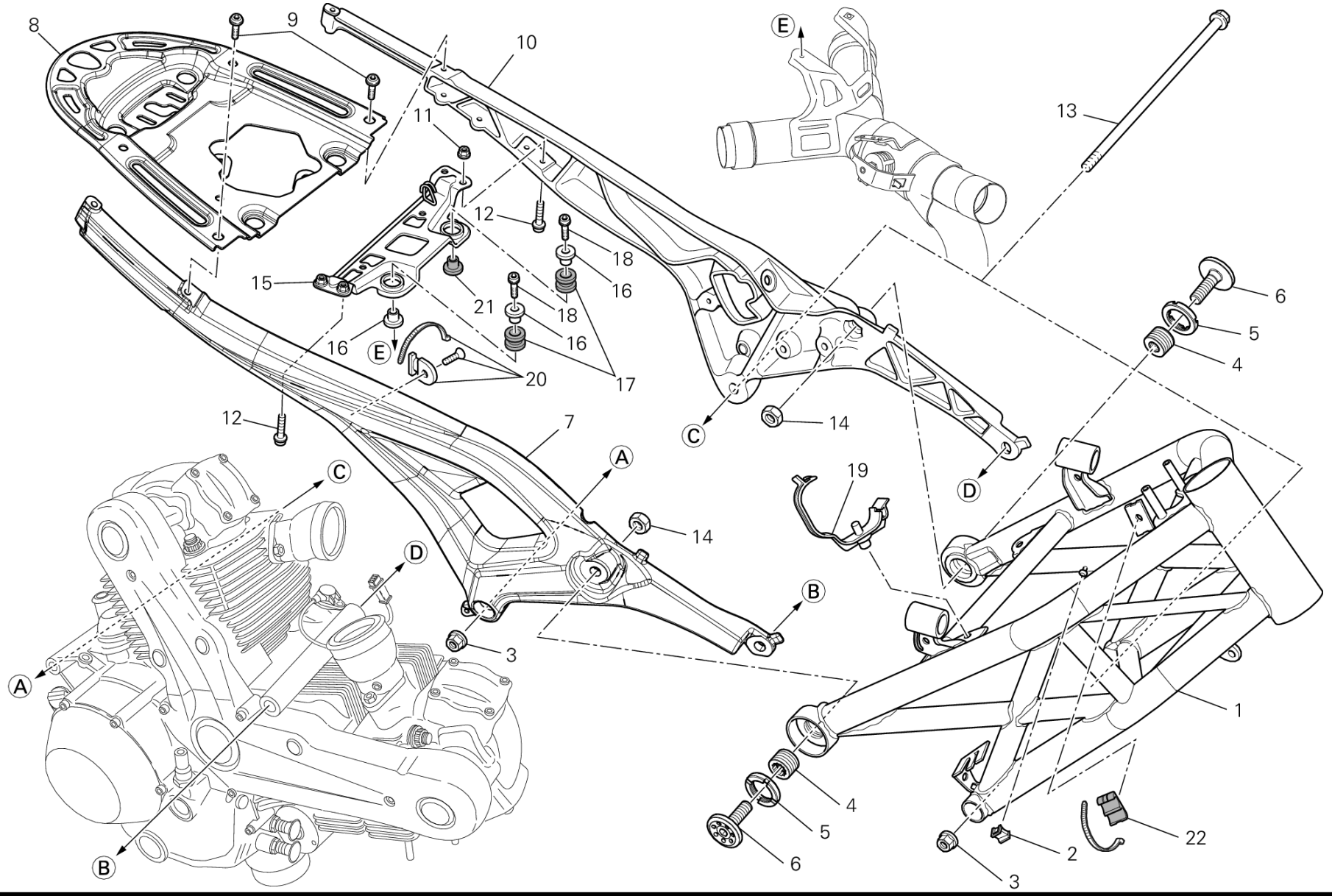
8
9
10
11
12
13
15
16
18
21
17
20
7
14
19
6
5
4
3
1
2
22
A
B
C
D
E

POS.	CODE	DESCRIPTION	QTY	START DATE	END DATE	VALIDITY	NOTES
1	47022041AA	FRAME RED	1	23/02/2012		DFR:N;MOD:M796 ABS;XST:AUS,EUR,JAP	ROSSO-RED-ROUGE-ROT-ROJO
2	85040671A	CLAMP TUCKER	6	23/02/2012		DFR:N;MOD:M796 ABS;XST:AUS,EUR,JAP	
3	74840021A	NUT M12	2	23/02/2012		DFR:N;MOD:M796 ABS;XST:AUS,EUR,JAP	
4	77915361A	THREADED DOWEL	2	19/04/2010		DFR:N;MOD:M796 ABS;XST:AUS,EUR,JAP	
5	70310491A	RING NUT M25X1	2	19/04/2010		DFR:N;MOD:M796 ABS;XST:AUS,EUR,JAP	
6	77915351AA	SCREW, SPECIAL	2	23/02/2012		DFR:N;MOD:M796 ABS;XST:AUS,EUR,JAP	
7	47110131D	REAR FRAME R.H.	1	23/02/2012		DFR:N;MOD:M796 ABS;XST:AUS,EUR,JAP	
8	82919731C	PLATE, REAR FRAME	1	23/02/2012		DFR:N;MOD:M796 ABS;XST:AUS,EUR,JAP	
9	77240583C	SCREW TBEIF M8X16	4	23/02/2012		DFR:N;MOD:M796 ABS;XST:AUS,EUR,JAP	
10	47110121D	REAR FRAME L.H.	1	23/02/2012		DFR:N;MOD:M796 ABS;XST:AUS,EUR,JAP	
11	74810401A	NUT, FLANGE	2	23/02/2012		DFR:N;MOD:M796 ABS;XST:AUS,EUR,JAP	
12	77156658B	SCREW TCEIF M6X16	4	23/02/2012		DFR:N;MOD:M796 ABS;XST:AUS,EUR,JAP	
13	77912131A	SCREW	2	23/02/2012		DFR:N;MOD:M796 ABS;XST:AUS,EUR,JAP	
14	75011531A	NUT M12X1.25	2	23/02/2012		DFR:N;MOD:M796 ABS;XST:AUS,EUR,JAP	
15	82919691B	BRACKET, FUEL TANK REAR	1	23/02/2012		DFR:N;MOD:M796 ABS;XST:AUS,EUR,JAP	
16	71614161A	SPACER 25X10X6	3	23/02/2012		DFR:N;MOD:M796 ABS;XST:AUS,EUR,JAP	
17	76411261A	DAMPER 25X17.5X10	2	23/02/2012		DFR:N;MOD:M796 ABS;XST:AUS,EUR,JAP	

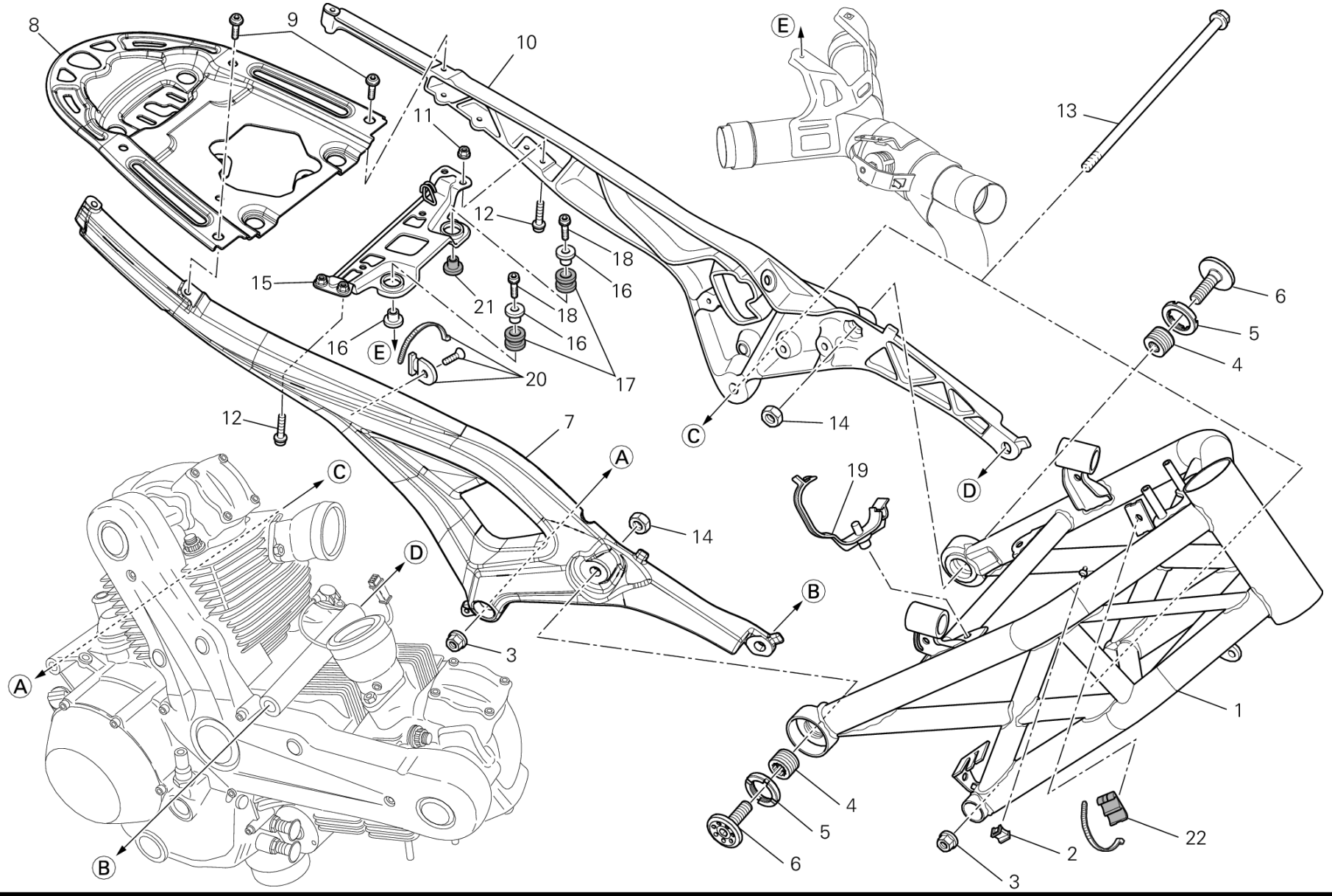
8
9
10
11
12
13
14
15
16
17
18
19
20
21
22
1
2
3
4
5
6
7
A
B
C
D
E

POS.	CODE	DESCRIPTION	QTY	START DATE	END DATE	VALIDITY	NOTES
18	77354898B	SCREW TCEIR M6X30	2	23/02/2012		DFR:N;MOD:M796 ABS;XST:AUS,EUR,JAP	
19	75840201A	CLAMP, WIRE	1	23/02/2012		DFR:N;MOD:M796 ABS;XST:AUS,EUR,JAP	
20	69926101A	CLAMP KIT	1			MOD:M796 ABS;XST:AUS,EUR,JAP	
21	71614151A	SPACER 25X10X6	1	23/02/2012		DFR:N;MOD:M796 ABS;XST:AUS,EUR,JAP	
22	86611121A	RUBBER PAD	1	23/02/2012		DFR:N;MOD:M796 ABS;XST:AUS,EUR,JAP	

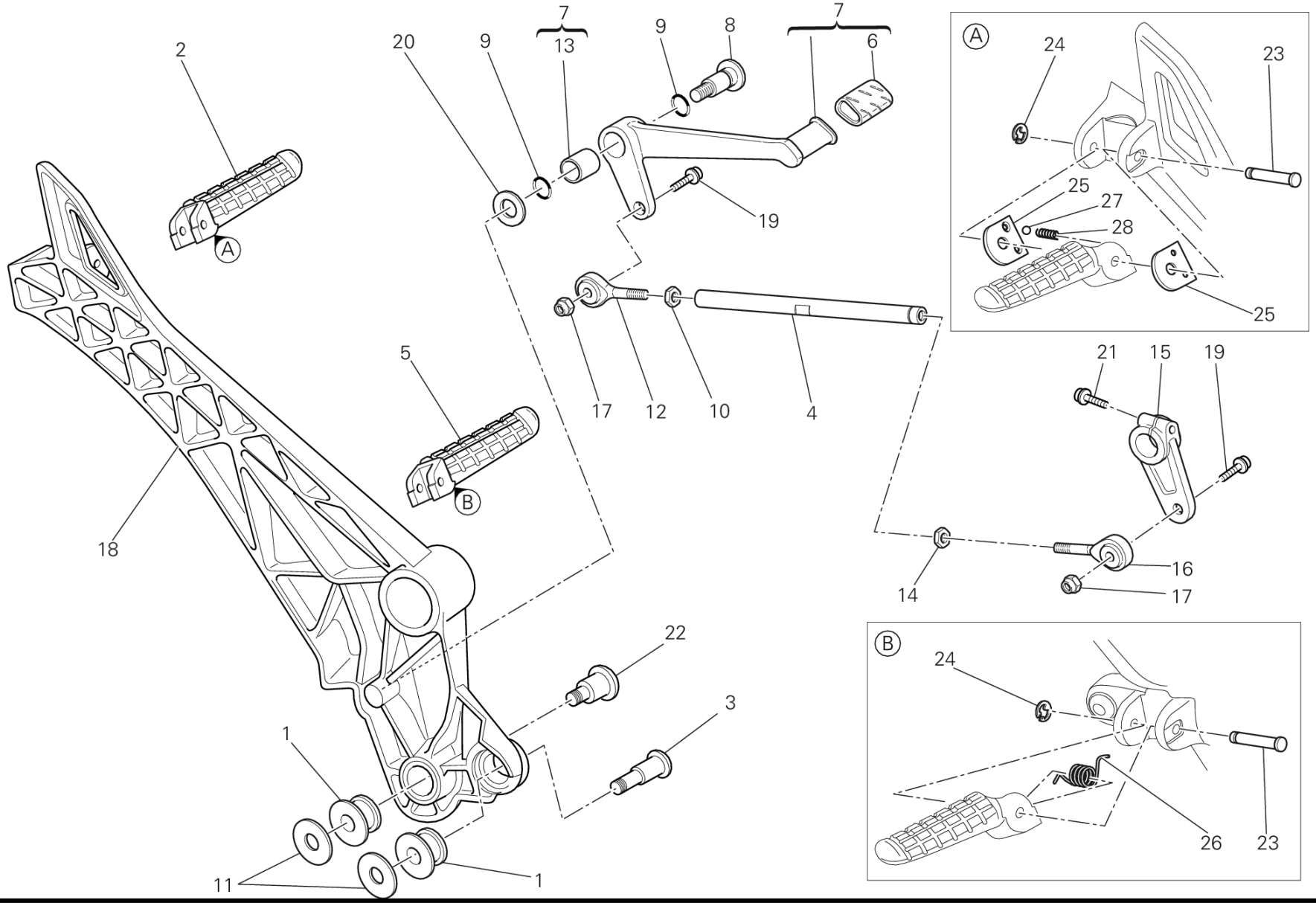
2
20
9
7
13
9
8
7
6
19
17
12
10
4
5
18
22
3
1
11
1
A
B
24
23
25
27
28
25
21
15
19
16
14
17
24
26
23

DRAWING 031 - FOOTRESTS, LEFT [MOD:M796 ABS;XST:AUS,EUR,JAP]

GROUP FRAME

POS.	CODE	DESCRIPTION	QTY	START DATE	END DATE	VALIDITY	NOTES
1	70010491A	DAMPER	2	24/12/2009		DFR:N;MOD:M796 ABS;XST:AUS,EUR,JAP	
2	46510611A	REAR LEFT FOOT-REST	1	24/12/2009		DFR:N;MOD:M796 ABS;XST:AUS,EUR,JAP	
3	77912061AB	SCREW	1	23/02/2012		DFR:N;MOD:M796 ABS;XST:AUS,EUR,JAP	
4	11710991A	ROD, GEAR SHIFT LINK	1	24/12/2009		DFR:N;MOD:M796 ABS;XST:AUS,EUR,JAP	
5	46410461A	FOOTREST, FRONT LH	1	24/12/2009		DFR:N;MOD:M796 ABS;XST:AUS,EUR,JAP	
6	76410112A	COVER PEDAL	1	16/02/2010		DFR:N;MOD:M796 ABS;XST:AUS,EUR,JAP	
7	45622021AB	PEDAL, GEAR CHANGE	1	24/12/2009		DFR:N;MOD:M796 ABS;XST:AUS,EUR,JAP	
8	82111701B	PIN PEDAL	1	23/11/2010		DFR:N;MOD:M796 ABS;XST:AUS,EUR,JAP	
9	88641161A	O-RING	2	24/12/2009		DFR:N;MOD:M796 ABS;XST:AUS,EUR,JAP	
10	74750011AB	NUT, LEFT THREAD M6	1	24/12/2009		DFR:N;MOD:M796 ABS;XST:AUS,EUR,JAP	
11	85210651B	WASHER 10.2X31X1.5	2	23/02/2012		DFR:N;MOD:M796 ABS;XST:AUS,EUR,JAP	
12	84850011A	BALL JOINT, LEFT	1	24/12/2009		DFR:N;MOD:M796 ABS;XST:AUS,EUR,JAP	
13	71210341A	BUSH	1	16/02/2010		DFR:N;MOD:M796 ABS;XST:AUS,EUR,JAP	
14	74750051B	NUT	1	24/12/2009		DFR:N;MOD:M796 ABS;XST:AUS,EUR,JAP	
15	45610461B	LEVER SHIFT PEDAL	1	24/12/2009		DFR:N;MOD:M796 ABS;XST:AUS,EUR,JAP	
16	84850021A	BALL JOINT, RIGHT	1	24/12/2009		DFR:N;MOD:M796 ABS;XST:AUS,EUR,JAP	
17	74950041A	NUT, SELF-LOCKING	2	23/02/2012		DFR:N;MOD:M796 ABS;XST:AUS,EUR,JAP	

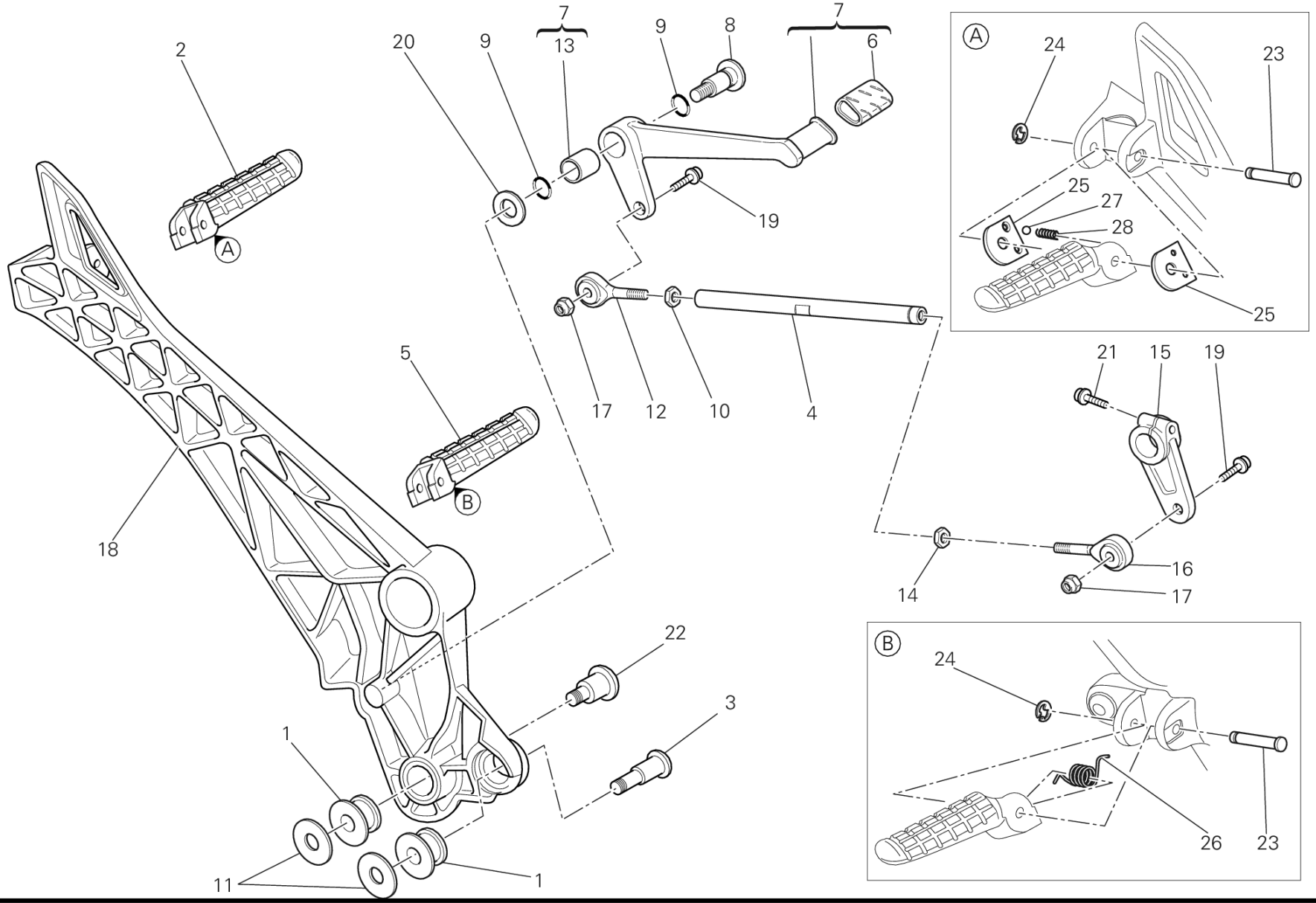
2
20
9
7
13
9
8
7
6
19
17
12
10
4
5
18
22
3
1
11
1
A
24
23
25
27
28
25
21
15
19
16
14
17
B
24
26
23

DRAWING 031 - FOOTRESTS, LEFT [MOD:M796 ABS;XST:AUS,EUR,JAP]

GROUP FRAME

POS.	CODE	DESCRIPTION	QTY	START DATE	END DATE	VALIDITY	NOTES
18	82411451C	BRACKET, LEFT FOOT REST HOLDER	1	24/12/2009		DFR:N;MOD:M796 ABS;XST:AUS,EUR,JAP	
19	77156678B	SCREW TCEIF M6X20	2	23/02/2012		DFR:N;MOD:M796 ABS;XST:AUS,EUR,JAP	
20	85211511A	WASHER	1	24/12/2009		DFR:N;MOD:M796 ABS;XST:AUS,EUR,JAP	
21	77110191A	SCREW TCEIF M6X20	1	23/02/2012		DFR:N;MOD:M796 ABS;XST:AUS,EUR,JAP	
22	77914181AA	SCREW, SPECIAL	1	04/05/2012		DFR:N;MOD:M796 ABS;XST:AUS,EUR,JAP	
23	82110901B	FOOTREST PIN	2	24/12/2009		DFR:N;MOD:M796 ABS;XST:AUS,EUR,JAP	
24	88450031A	CIRCLIP E-TYPE	2	24/12/2009		DFR:N;MOD:M796 ABS;XST:AUS,EUR,JAP	
25	82711611B	PLATE	2	24/12/2009		DFR:N;MOD:M796 ABS;XST:AUS,EUR,JAP	
26	79914991A	SPRING. FOOTREST	1	24/12/2009		DFR:N;MOD:M796 ABS;XST:AUS,EUR,JAP	
27	84740021A	BALL	1	24/12/2009		DFR:N;MOD:M796 ABS;XST:AUS,EUR,JAP	
28	79910241A	SPRING	1	24/12/2009		DFR:N;MOD:M796 ABS;XST:AUS,EUR,JAP	

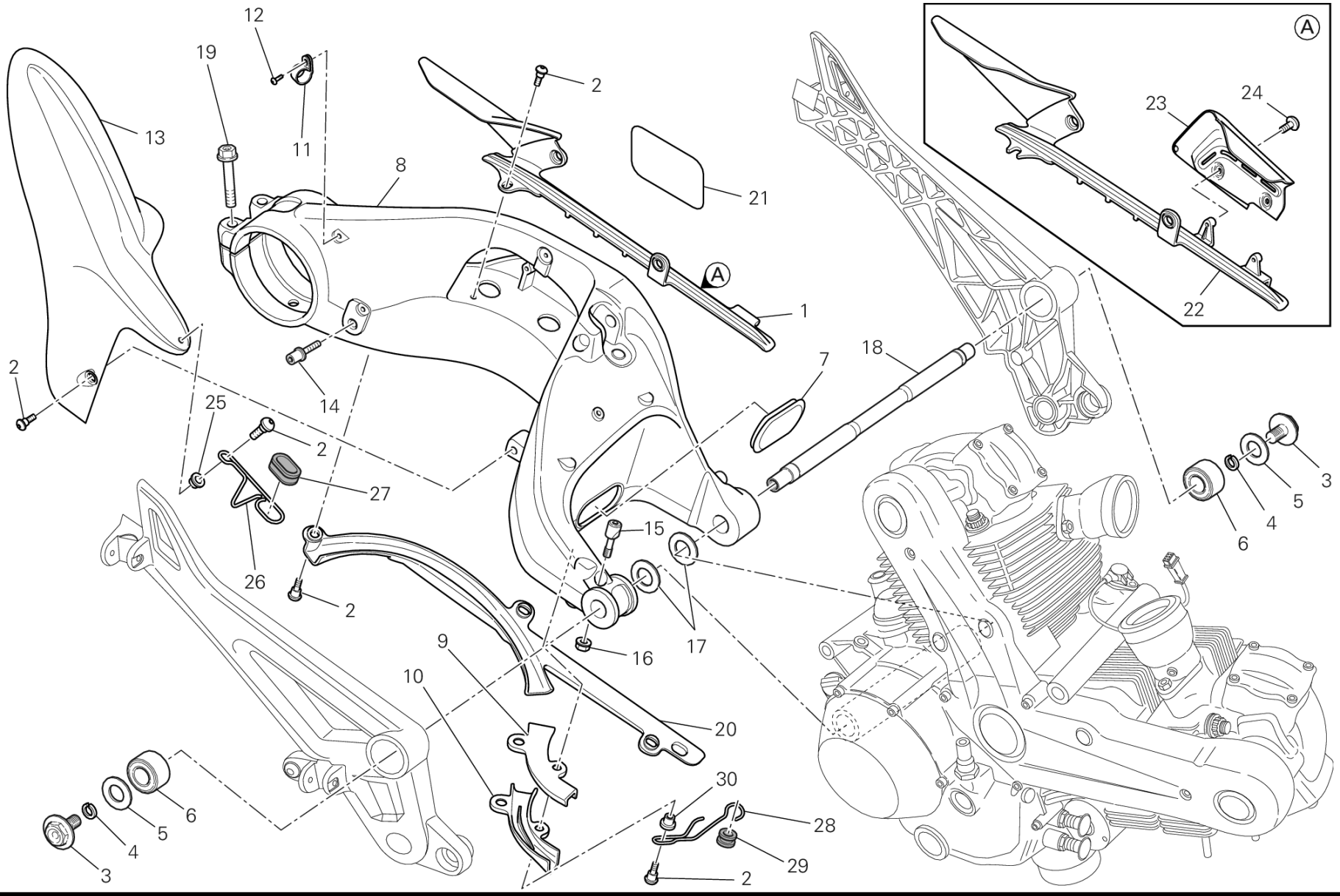
12
19
11
13
8
2
21
A
1
23
24
22
18
7
14
25
2
27
26
2
15
17
16
9
10
20
30
28
29
2
3
4
5
6
6
5
4
3

DRAWING 032 - SWING ARM [MOD:M796 ABS;XST:AUS,EUR,JAP]

GROUP FRAME

POS.	CODE	DESCRIPTION	QTY	START DATE	END DATE	VALIDITY	NOTES
1	44610191A	UPPER CHAIN SLIDING SHOE	1	23/02/2012		DFR:N;MOD:M796 ABS;XST:AUS,EUR,JAP	
2	77210852C	SCREW	9	23/02/2012		DFR:N;MOD:M796 ABS;XST:AUS,EUR,JAP	
3	77911511AA	SCREW, SPECIAL	2	23/02/2012		DFR:N;MOD:M796 ABS;XST:AUS,EUR,JAP	
4	88440071A	SPRING RING	2	23/02/2012		DFR:N;MOD:M796 ABS;XST:AUS,EUR,JAP	
5	85211571A	WASHER 12.2X25X1.5	2	23/02/2012		DFR:N;MOD:M796 ABS;XST:AUS,EUR,JAP	
6	70010391A	DAMPER FOOTREST	2	24/12/2009		DFR:N;MOD:M796 ABS;XST:AUS,EUR,JAP	
7	87210601A	CAP, SWINGARM COVER	1	19/04/2010		DFR:N;MOD:M796 ABS;XST:AUS,EUR,JAP	
8	37010911B	SWING ARM	1	23/02/2012		DFR:N;MOD:M796 ABS;XST:AUS,EUR,JAP	
9	46013541A	GUARD, LOWER	1	23/02/2012		DFR:N;MOD:M796 ABS;XST:AUS,EUR,JAP	
10	46013571A	GUARD, UPPER	1	23/02/2012		DFR:N;MOD:M796 ABS;XST:AUS,EUR,JAP	
11	75840161A	FAIRLEAD	2	23/02/2012		DFR:N;MOD:M796 ABS;XST:AUS,EUR,JAP	
12	77550221A	SCREW TBEI M4X10	2	23/02/2012		DFR:N;MOD:M796 ABS;XST:AUS,EUR,JAP	
13	56510431A	REAR MUDGUARD	1	23/02/2012		DFR:N;MOD:M796 ABS;XST:AUS,EUR,JAP	
14	83210261B	PIN	1	19/04/2010		DFR:N;MOD:M796 ABS;XST:AUS,EUR,JAP	
15	80810461A	CLAMP	1	23/02/2012		DFR:N;MOD:M796 ABS;XST:AUS,EUR,JAP	
16	74840341B	NUT M8	1	23/02/2012		DFR:N;MOD:M796 ABS;XST:AUS,EUR,JAP	
17	85210011B	THRUST WASHER 20.5X36X1.8 MM	2	23/02/2012		DFR:N;MOD:M796 ABS;XST:AUS,EUR,JAP	

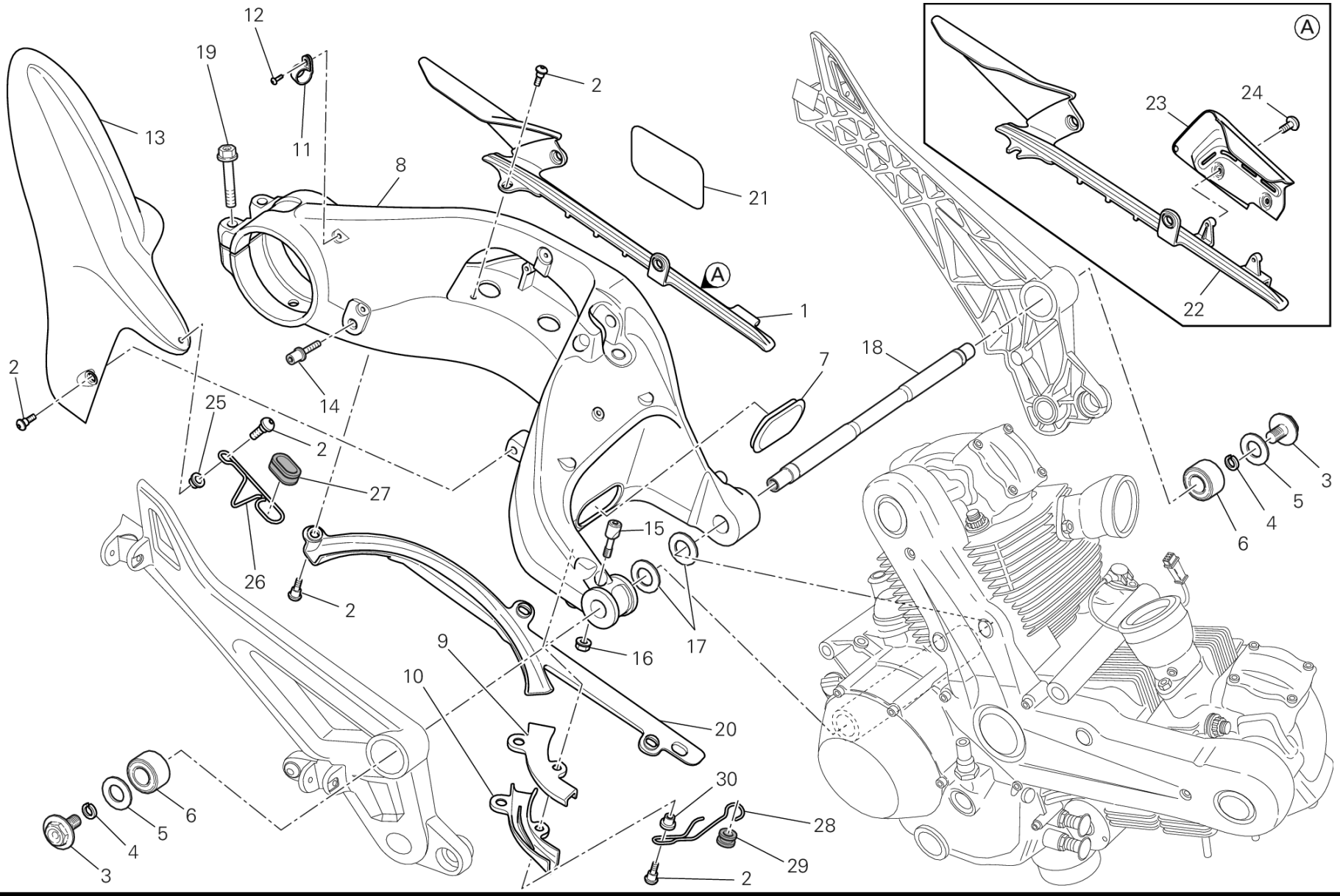
12
19
11
13
8
2
21
A
1
23
24
22
18
7
2
14
25
2
27
26
2
15
17
16
9
10
20
30
28
29
2
3
5
4
6
6
5
4
3

POS.	CODE	DESCRIPTION	QTY	START DATE	END DATE	VALIDITY	NOTES
	85210021B	THRUST WASHER 20.5X36X0.2 MM	2	23/02/2012		DFR:N;MOD:M796 ABS;XST:AUS,EUR,JAP	
	85210031B	THRUST WASHER 20.5X36X0.1 MM	2	23/02/2012		DFR:N;MOD:M796 ABS;XST:AUS,EUR,JAP	
18	36910081A	AXLE, REAR SWING ARM	1	23/02/2012		DFR:N;MOD:M796 ABS;XST:AUS,EUR,JAP	
19	77210042B	SCREW	2	19/04/2010		DFR:N;MOD:M796 ABS;XST:AUS,EUR,JAP	
20	44710771A	LOWER CHAIN SLIDING SHOE	1	23/02/2012		DFR:N;MOD:M796 ABS;XST:AUS,EUR,JAP	
21	43313631A	STICKER, ADJUSTING CHAIN	1	23/02/2012		DFR:N;MOD:M796 ABS;XST:AUS,EUR,JAP	
	43313631B	STICKER, ADJUSTING CHAIN	1	23/02/2012		DFR:N;MOD:M796 ABS;XST:AUS,EUR,JAP	JAP
22	44610201A	UPPER CHAIN SLIDING SHOE	1	23/02/2012		DFR:N;MOD:M796 ABS;XST:AUS,EUR,JAP	AUS
23	44610211A	CHAIN GUARD	1	23/02/2012		DFR:N;MOD:M796 ABS;XST:AUS,EUR,JAP	AUS
24	77440081A	SCREW, TAPPING 5X9.5	2	23/02/2012		DFR:N;MOD:M796 ABS;XST:AUS,EUR,JAP	AUS
25	71611461AB	SPACER	1	23/02/2012		DFR:N;MOD:M796 ABS;XST:AUS,EUR,JAP	
26	75810521AA	HOSE GUIDE ABS UPPER	1	14/04/2010		DFR:N;MOD:M796 ABS;XST:AUS,EUR,JAP	
27	75810541B	RUBBER PAD	1	14/04/2010		DFR:N;MOD:M796 ABS;XST:AUS,EUR,JAP	
28	75810531A	HOSE GUIDE ABS BOTTOM	1	26/04/2010		DFR:N;MOD:M796 ABS;XST:AUS,EUR,JAP	
29	76411141A	VIBRATION DAMPER PAD	1	26/04/2010		DFR:N;MOD:M796 ABS;XST:AUS,EUR,JAP	
30	71319211A	SPACER	1	23/02/2012		DFR:N;MOD:M796 ABS;XST:AUS,EUR,JAP	

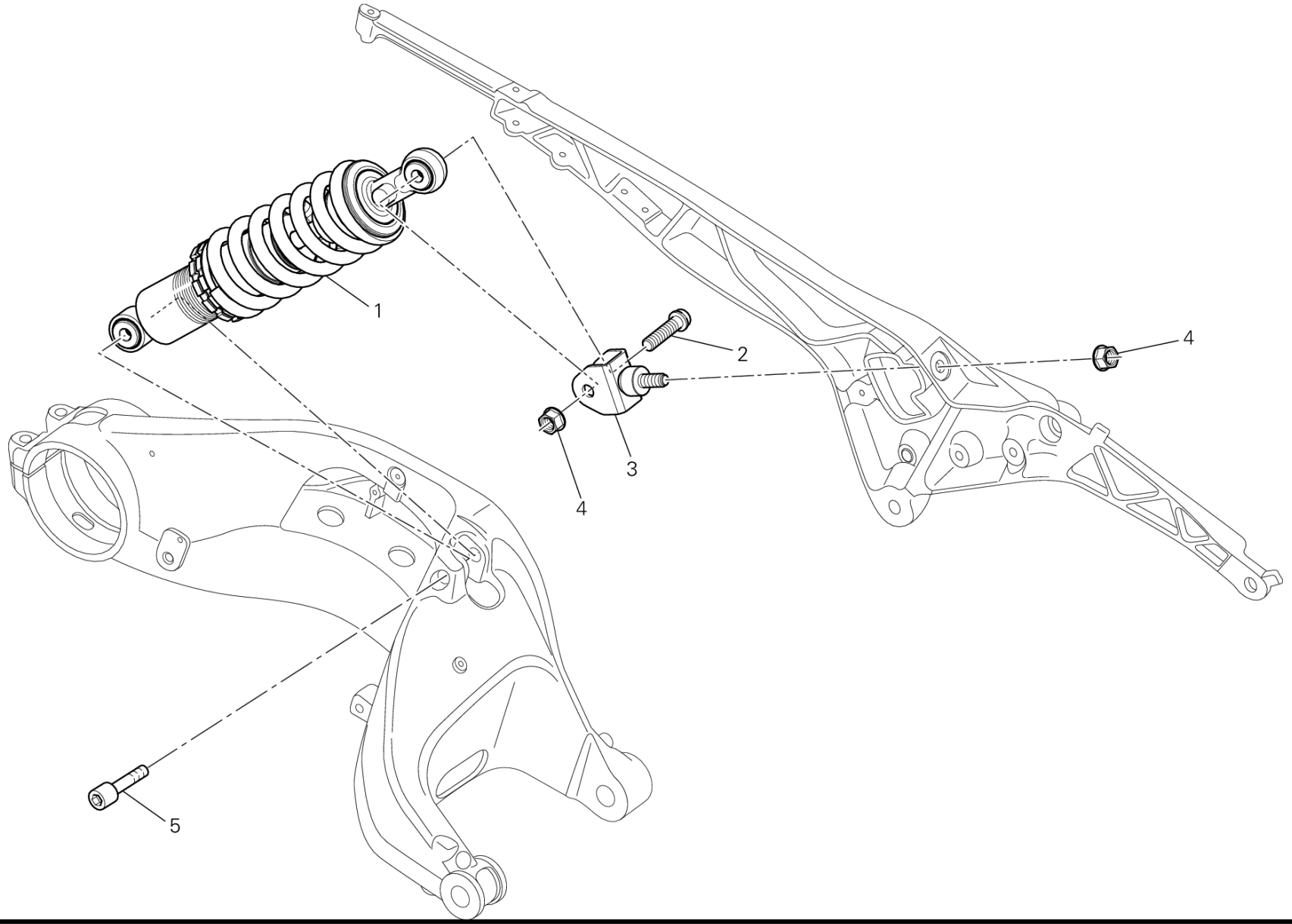
1
2
3
4
4
5

DRAWING 033 - REAR SHOCK ABSORBER [MOD:M796 ABS;XST:AUS,EUR,JAP]

GROUP FRAME

POS.	CODE	DESCRIPTION	QTY	START DATE	END DATE	VALIDITY	NOTES
1	36520802A	REAR SHOCK ABSORBER	1	24/12/2009		DFR:N;MOD:M796 ABS;XST:AUS,EUR,JAP	
2	77159358C	SCREW TCEIF M10X1.25X40	1	24/12/2009		DFR:N;MOD:M796 ABS;XST:AUS,EUR,JAP	
3	82919631B	HOLDER, SHOCK ABSORBER ADJUSTER	1	23/02/2012		DFR:N;MOD:M796 ABS;XST:AUS,EUR,JAP	
4	74840241AB	NUT M10X1.25X10	2	24/12/2009		DFR:N;MOD:M796 ABS;XST:AUS,EUR,JAP	
5	77915041A	SCREW	1	23/02/2012		DFR:N;MOD:M796 ABS;XST:AUS,EUR,JAP	

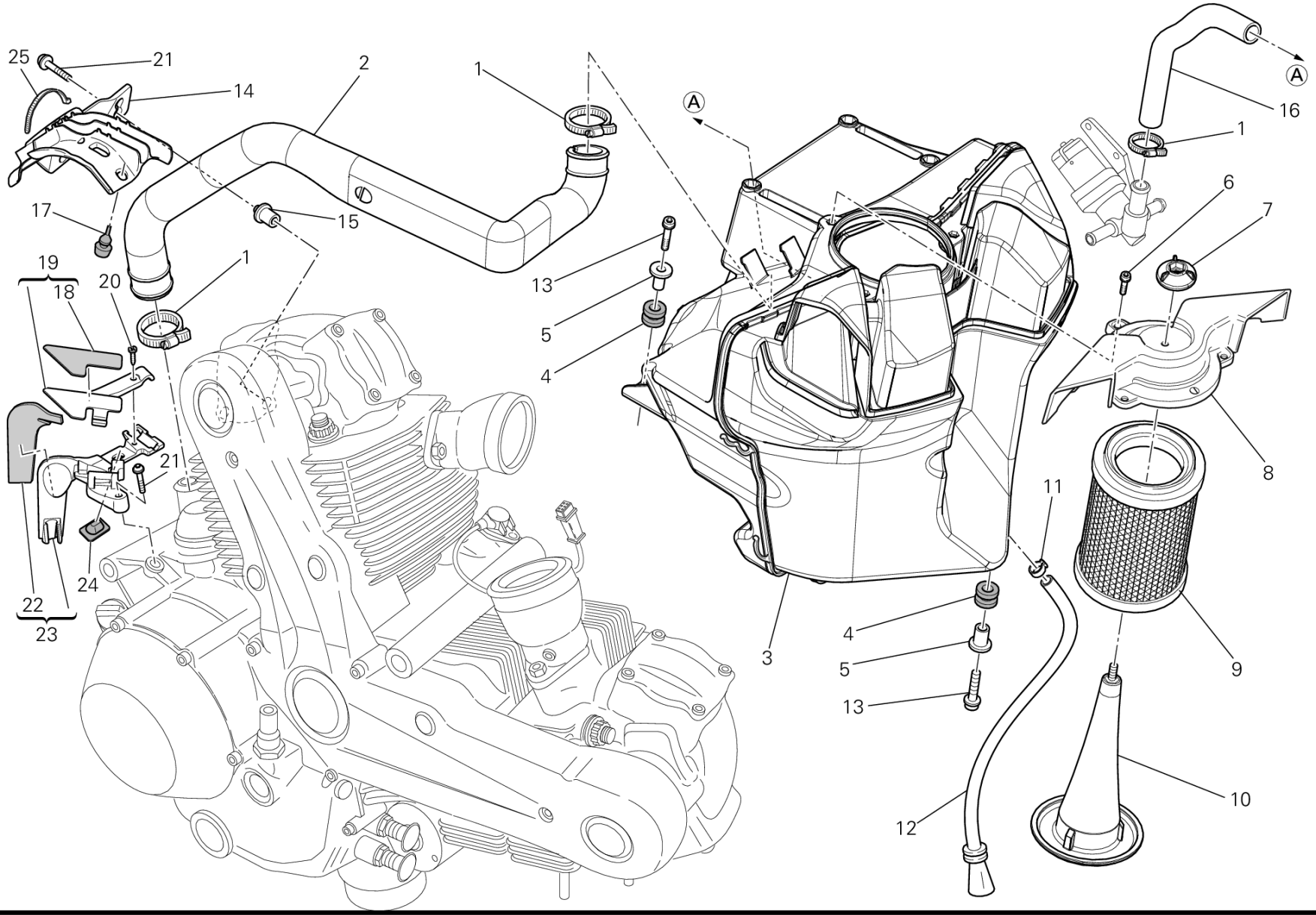
25
21
14
2
1
17
15
19
18
20
1
21
22
23
24
13
5
4
A
A
16
1
6
7
8
11
4
5
13
3
9
10
12

POS.	CODE	DESCRIPTION	QTY	START DATE	END DATE	VALIDITY	NOTES
1	74141811A	CLAMP 16-27 MM	3	23/02/2012		DFR:N;MOD:M796 ABS;XST:AUS,EUR,JAP	
2	87611041A	HOSE, BLOW-BY	1	23/02/2012		DFR:N;MOD:M796 ABS;XST:AUS,EUR,JAP	
3	44211641B	AIR FILTER BOX	1	23/02/2012		DFR:N;MOD:M796 ABS;XST:AUS,EUR,JAP	
4	76410901A	RUBBER PAD	2	23/02/2012		DFR:N;MOD:M796 ABS;XST:AUS,EUR,JAP	
5	71610221B	SPACER	2	23/02/2012		DFR:N;MOD:M796 ABS;XST:AUS,EUR,JAP	
6	77350388B	SCREW TCEIR M5X10	3	23/02/2012		DFR:N;MOD:M796 ABS;XST:AUS,EUR,JAP	
7	70310481A	RING NUT	1	23/02/2012		DFR:N;MOD:M796 ABS;XST:AUS,EUR,JAP	
8	24612022A	COVER, AIR FILTER CASE	1	23/02/2012		DFR:N;MOD:M796 ABS;XST:AUS,EUR,JAP	
9	42610191A	FILTER, AIR	1	23/02/2012		DFR:N;MOD:M796 ABS;XST:AUS,EUR,JAP	
10	82919611A	CAGE, AIR FILTER	1	23/02/2012		DFR:N;MOD:M796 ABS;XST:AUS,EUR,JAP	
11	74141711A	CLAMP 10-7 MM	1	23/02/2012		DFR:N;MOD:M796 ABS;XST:AUS,EUR,JAP	
12	59013131A	BREATHER PIPE	1	23/02/2012		DFR:N;MOD:M796 ABS;XST:AUS,EUR,JAP	
13	77156678B	SCREW TCEIF M6X20	3	23/02/2012		DFR:N;MOD:M796 ABS;XST:AUS,EUR,JAP	
14	75810571B	GUIDE	1	23/02/2012		DFR:N;MOD:M796 ABS;XST:AUS,EUR,JAP	
15	71614211B	SPACER	2	23/02/2012		DFR:N;MOD:M796 ABS;XST:AUS,EUR,JAP	
16	59013431A	PIPE	1			MOD:M796 ABS;XST:AUS,EUR,JAP	
17	86610581A	VIBRATION DAMPER PAD	1	23/02/2012		DFR:N;MOD:M796 ABS;XST:AUS,EUR,JAP	
18	46014031A	HEAT GUARD	1	24/12/2009		DFR:N;MOD:M796 ABS;XST:AUS,EUR,JAP	

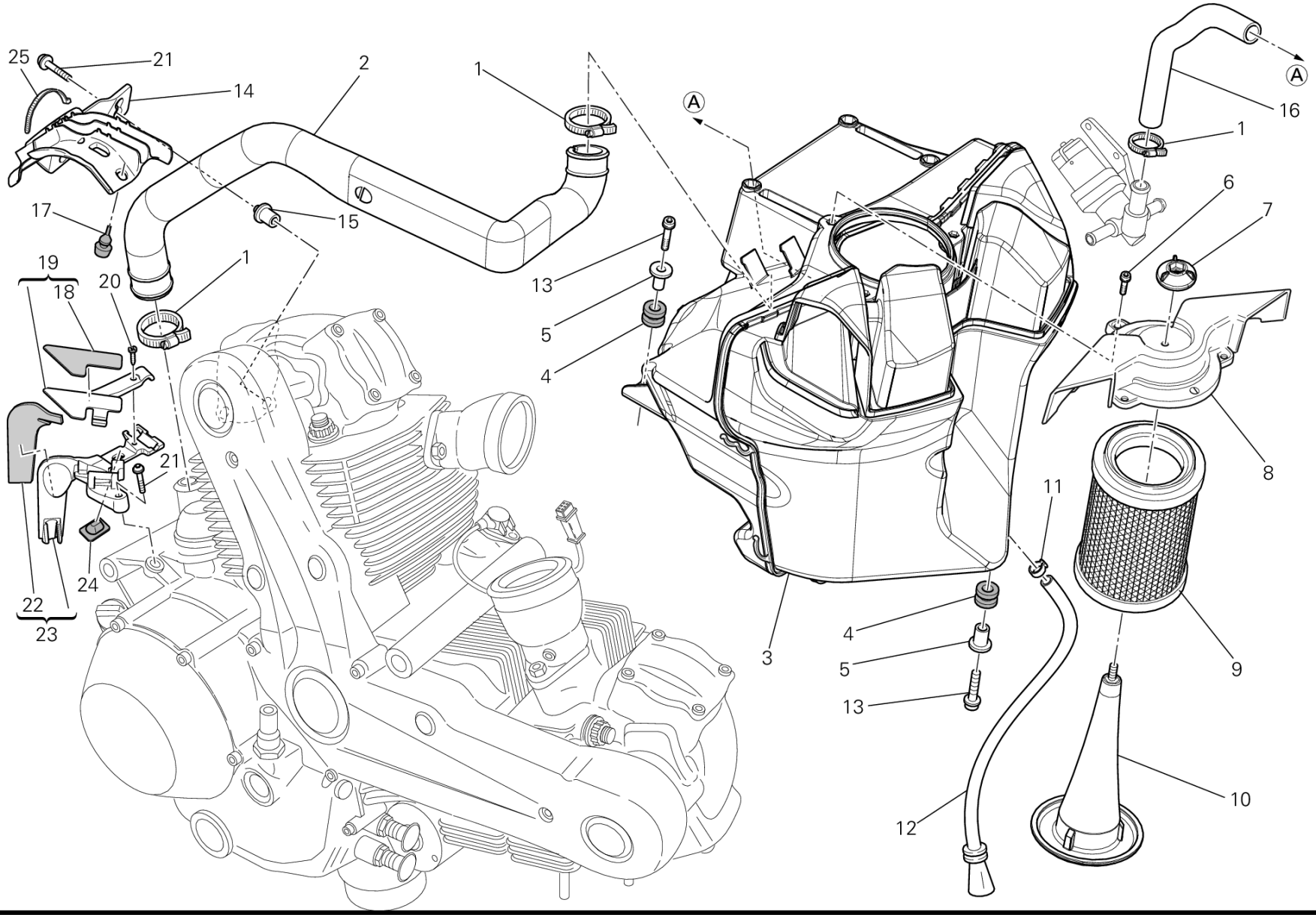
25
21
14
2
1
17
15
19
18
20
1
21
22
23
24
13
5
4
A
A
16
1
6
7
8
11
4
5
13
3
9
12
10

POS.	CODE	DESCRIPTION	QTY	START DATE	END DATE	VALIDITY	NOTES
19	82929921A	HOSE GUIDE ABS UPPER	1	23/02/2012		DFR:N;MOD:M796 ABS;XST:AUS,EUR,JAP	
20	77440101A	SCREW, TAPPING 3.5X10	1	23/02/2012		DFR:N;MOD:M796 ABS;XST:AUS,EUR,JAP	
21	77240483C	SCREW	2	23/02/2012		DFR:N;MOD:M796 ABS;XST:AUS,EUR,JAP	
22	46014021A	HEAT GUARD	1	24/12/2009		DFR:N;MOD:M796 ABS;XST:AUS,EUR,JAP	
23	82919911A	HOSE GUIDE ABS BOTTOM	1	23/02/2012		DFR:N;MOD:M796 ABS;XST:AUS,EUR,JAP	
24	86610301A	PAD	1	23/02/2012		DFR:N;MOD:M796 ABS;XST:AUS,EUR,JAP	
25	069191030	CLAMP	3	23/02/2012		DFR:N;MOD:M796 ABS;XST:AUS,EUR,JAP	

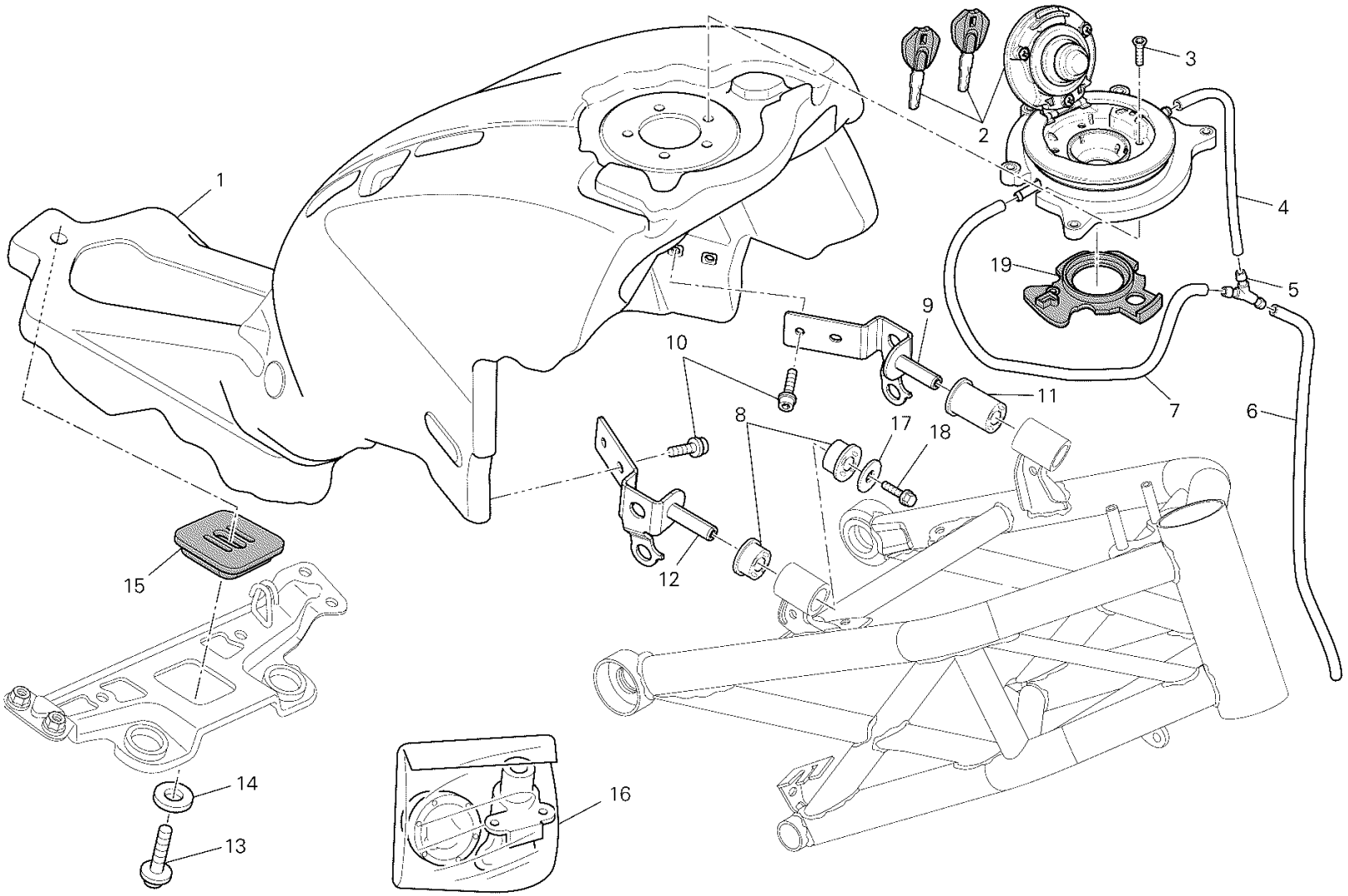

VST00860

DRAWING 035 - FUEL TANK [MOD:M796 ABS;XST:AUS,EUR,JAP]

GROUP FRAME

POS.	CODE	DESCRIPTION	QTY	START DATE	END DATE	VALIDITY	NOTES
1	58631712F	TANK	1	11/04/2012		DFR:N;MOD:M796 ABS;XST:AUS,EUR,JAP	
2	89520391B	CAP SET, FUEL TANK	1	09/07/2012		DFR:N;MOD:M796 ABS;XST:AUS,EUR,JAP	
3	77750343B	SCREW TSPEI M5X12	5	23/02/2012		DFR:N;MOD:M796 ABS;XST:AUS,EUR,JAP	
4	59013321B	HOSE, DRAIN	1	23/02/2012		DFR:N;MOD:M796 ABS;XST:AUS,EUR,JAP	
5	61610021A	THREE-WAYS UNION	1	23/02/2012		DFR:N;MOD:M796 ABS;XST:AUS,EUR,JAP	
6	59013331B	BREATHER PIPE	1	23/02/2012		DFR:N;MOD:M796 ABS;XST:AUS,EUR,JAP	
7	59013311B	BREATHER PIPE	1	23/02/2012		DFR:N;MOD:M796 ABS;XST:AUS,EUR,JAP	
8	76411121A	PAD, FUEL TANK	2	23/02/2012		DFR:N;MOD:M796 ABS;XST:AUS,EUR,JAP	
9	82714791A	BRACKET, TANK LH	1	01/01/2001		DFR:N;MOD:M796 ABS;XST:AUS,EUR,JAP	
10	77113691B	SCREW	4	01/01/2001		DFR:N;MOD:M796 ABS;XST:AUS,EUR,JAP	
11	76410501A	RUBBER PAD	1	23/02/2012		DFR:N;MOD:M796 ABS;XST:AUS,EUR,JAP	
12	82714781A	BRACKET, TANK RH	1	01/01/2001		DFR:N;MOD:M796 ABS;XST:AUS,EUR,JAP	
13	77915432B	SCREW	1	23/02/2012		DFR:N;MOD:M796 ABS;XST:AUS,EUR,JAP	
14	85210651C	WASHER 10.2X31X1.5	1	23/02/2012		DFR:N;MOD:M796 ABS;XST:AUS,EUR,JAP	
15	86610991A	PAD, FUEL TANK	1	07/04/2010		DFR:N;MOD:M796 ABS;XST:AUS,EUR,JAP	
16	59821141A	LOCK KIT	1	01/11/2012		DFR:N;MOD:M796 ABS;XST:AUS,EUR,JAP	
17	85211961B	WASHER 6.4X25X1.5	1	23/02/2012		DFR:N;MOD:M796 ABS;XST:AUS,EUR,JAP	

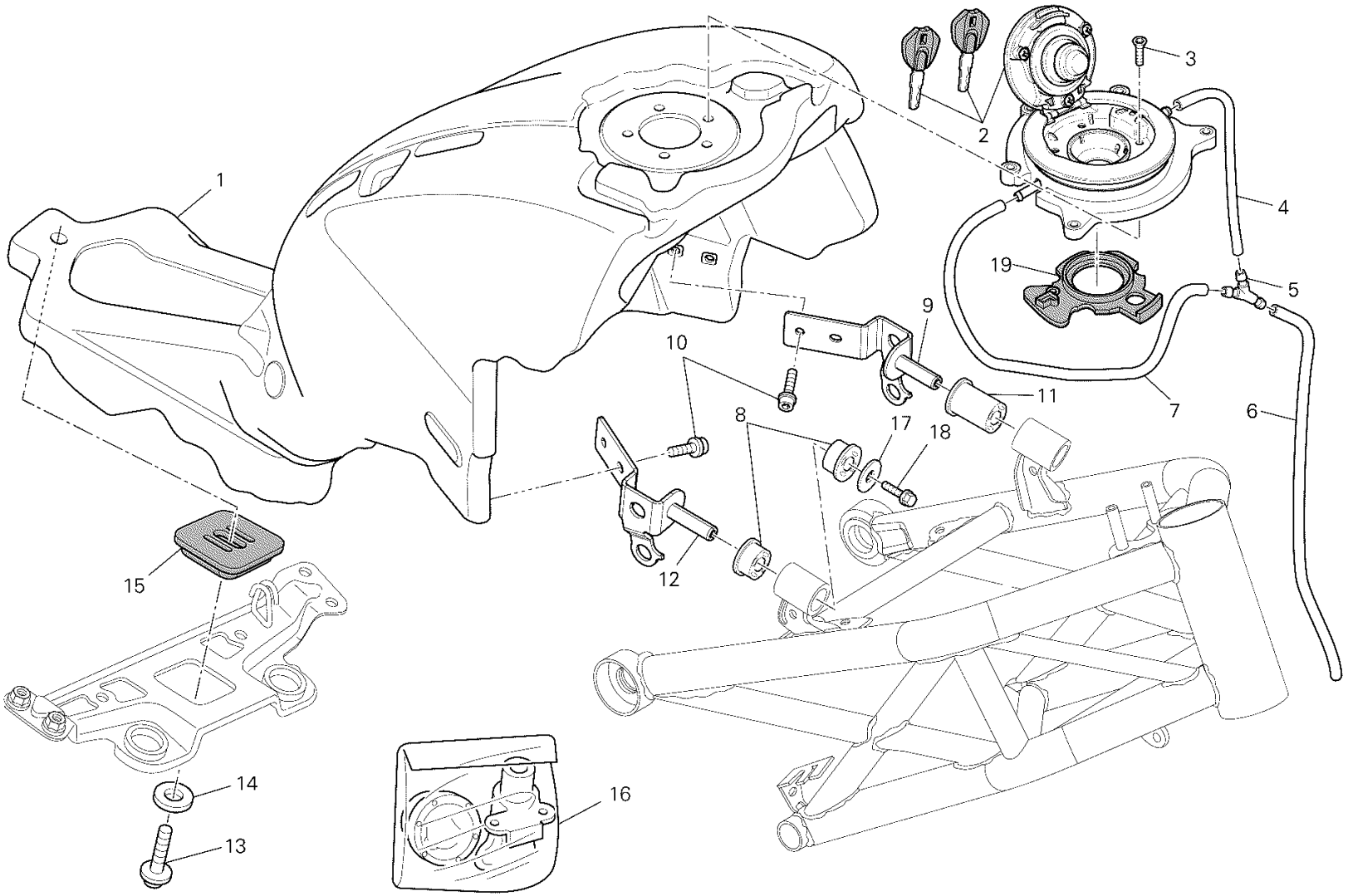
1
2
3
4
5
6
7
8
9
10
11
12
13
14
15
16
17
18
19
VST00860

POS.	CODE	DESCRIPTION	QTY	START DATE	END DATE	VALIDITY	NOTES
18	77250978B	SCREW TEF M6X12	1	23/02/2012		DFR:N;MOD:M796 ABS;XST:AUS,EUR,JAP	
19	86640071A	GASKET, FUEL TANK CAP	1	07/06/2011		DFR:N;MOD:M796 ABS;XST:AUS,EUR,JAP	

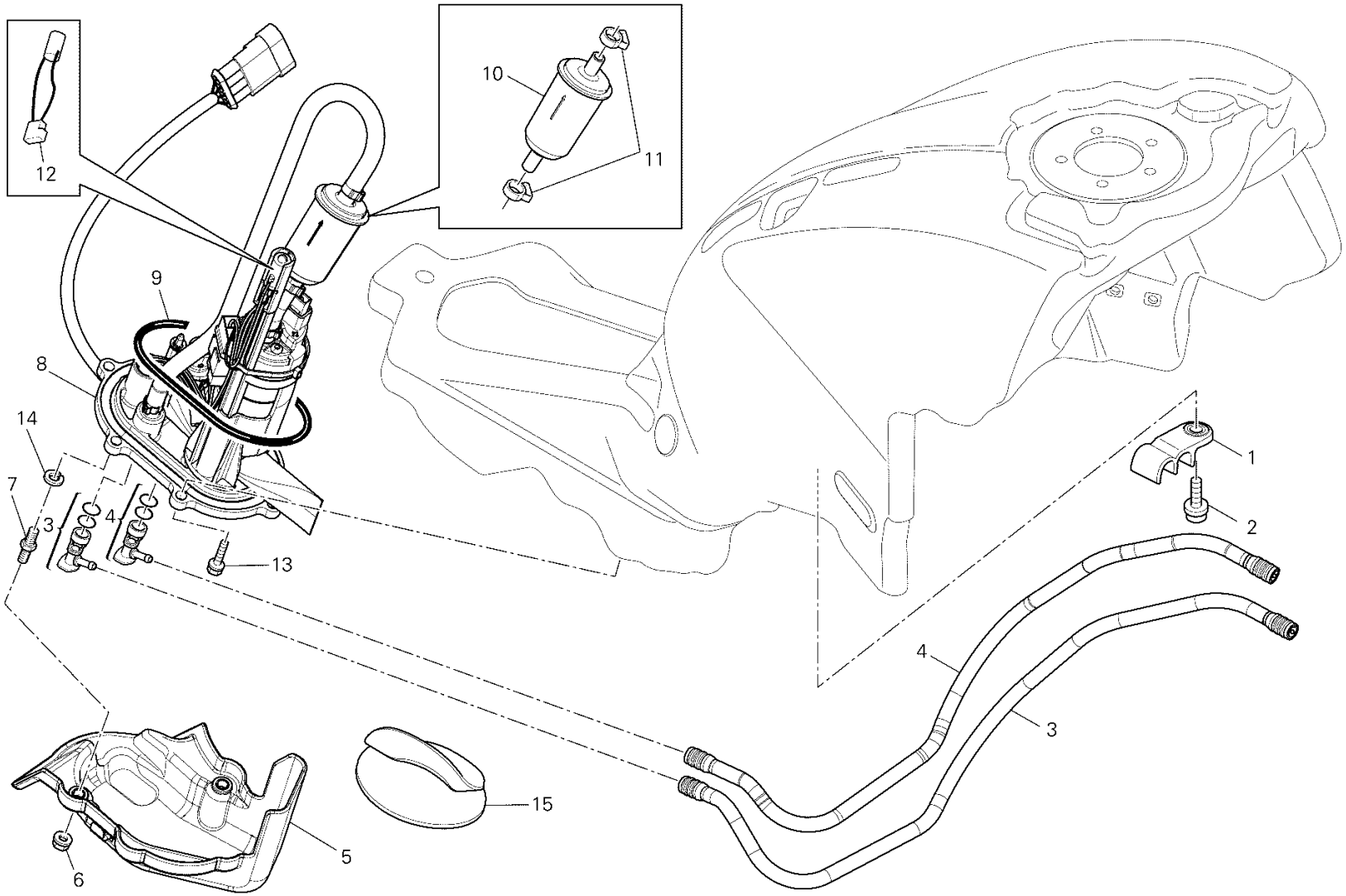

VST00921

POS.	CODE	DESCRIPTION	QTY	START DATE	END DATE	VALIDITY	NOTES
1	75810432A	HOSE GUIDE	2	01/01/2001		DFR:N;MOD:M796 ABS;XST:AUS,EUR,JAP	
2	77156398B	SCREW TCEIF M5X12	2	01/01/2001		DFR:N;MOD:M796 ABS;XST:AUS,EUR,JAP	
3	59013291A	HOSE, FUEL DELIVERY	1	01/01/2001		DFR:N;MOD:M796 ABS;XST:AUS,EUR,JAP	
4	59013301A	HOSE, FUEL RETURN	1	01/01/2001		DFR:N;MOD:M796 ABS;XST:AUS,EUR,JAP	
5	24713285A	COVER, FUEL PUMP	1	01/01/2001		DFR:N;MOD:M796 ABS;XST:AUS,EUR,JAP	
6	74941108B	NUT, SELF LOCKING M5	2	01/01/2001		DFR:N;MOD:M796 ABS;XST:AUS,EUR,JAP	
7	77915691B	SCREW, SPECIAL	2	01/01/2001		DFR:N;MOD:M796 ABS;XST:AUS,EUR,JAP	
8	16023791B	FLANGE	1	23/02/2012		DFR:N;MOD:M796 ABS;XST:AUS,EUR,JAP	
9	88650481A	O-RING 88.27X5.34	1	24/12/2009		DFR:N;MOD:M796 ABS;XST:AUS,EUR,JAP	
10	42540151A	FILTER, FUEL	1	16/06/2010		DFR:N;MOD:M796 ABS;XST:AUS,EUR,JAP	
11	69923451A	CLAMPS KIT	1			MOD:M796 ABS;XST:AUS,EUR,JAP	
12	55240482A	THERMISTOR	1	16/06/2010		DFR:N;MOD:M796 ABS;XST:AUS,EUR,JAP	
13	77250748B	SCREW TEF M5X16	4	01/01/2001		DFR:N;MOD:M796 ABS;XST:AUS,EUR,JAP	
14	46230105A	SPRING WASHER 5 MM	2	01/01/2001		DFR:N;MOD:M796 ABS;XST:AUS,EUR,JAP	
15	46013681A	PROTECTOR, HEAT	1	01/01/2001		DFR:N;MOD:M796 ABS;XST:AUS,EUR,JAP	

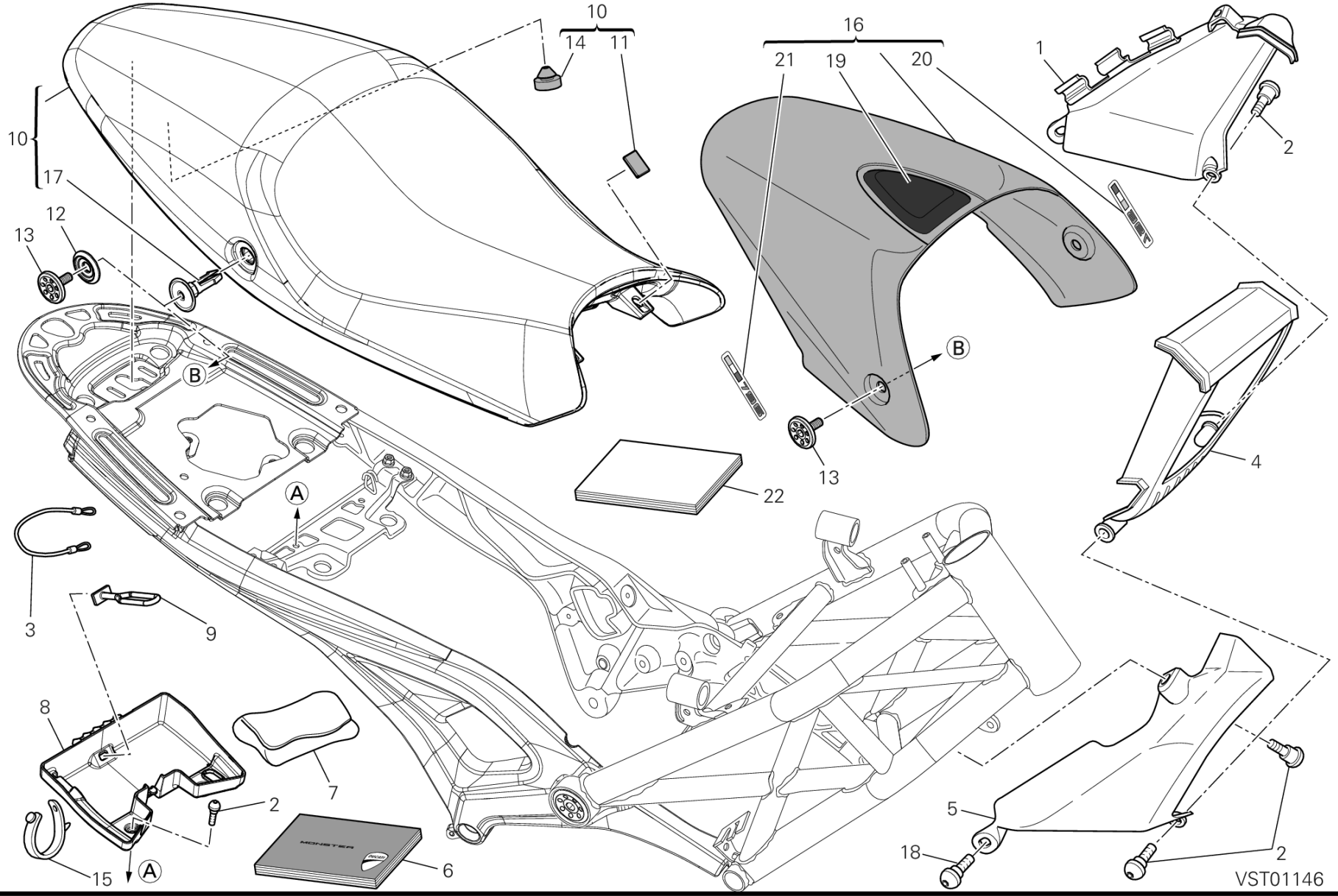
10
14
11
16
21
19
20
1
2
10
17
12
13
B
A
22
4
3
9
8
7
2
15
6
5
18
VST01146

DRAWING 037 - SEAT [MOD:M796 ABS;XST:AUS,EUR,JAP]

GROUP FRAME

POS.	CODE	DESCRIPTION	QTY	START DATE	END DATE	VALIDITY	NOTES
1	48410691A	LEFT AIR MANIFOLD	1	23/02/2012		DFR:N;MOD:M796 ABS;XST:AUS,EUR,JAP	
2	77210853B	SCREW TCEI M5X9	6	23/02/2012		DFR:N;MOD:M796 ABS;XST:AUS,EUR,JAP	
3	73210071A	ANTI-THEFT CABLE	1			MOD:M796 ABS;XST:AUS,EUR,JAP	
4	48410701A	BAFFLE	1	23/02/2012		DFR:N;MOD:M796 ABS;XST:AUS,EUR,JAP	
5	48410681A	RIGHT AIR MANIFOLD	1	23/02/2012		DFR:N;MOD:M796 ABS;XST:AUS,EUR,JAP	
6	91372011A	OWNER'S MANUAL	1	23/02/2012		DFR:N;MOD:M796 ABS;XST:AUS,EUR,JAP	I-GB-F-D
	91372011B	OWNER'S MANUAL	1			MOD:M796 ABS;XST:AUS,EUR,JAP	GB-E-F-J
	91372011C	OWNER'S MANUAL	1			MOD:M796 ABS;XST:AUS,EUR,JAP	E-P-GR
	91372011D	OWNER'S MANUAL	1			MOD:M796 ABS;XST:AUS,EUR,JAP	F-NL-CN
	91372011E	OWNER'S MANUAL	1			MOD:M796 ABS;XST:AUS,EUR,JAP	S-FIN-DK-N
	91372011F	OWNER'S MANUAL	1			MOD:M796 ABS;XST:AUS,EUR,JAP	PL-CZ-SK-SLO
	91372011G	OWNER'S MANUAL	1			MOD:M796 ABS;XST:AUS,EUR,JAP	H-RO-BG-RUS
	91372011L	OWNER'S MANUAL	1			MOD:M796 ABS;XST:AUS,EUR,JAP	BR
7	69720241A	TOOLS KIT	1	23/02/2012		DFR:N;MOD:M796 ABS;XST:AUS,EUR,JAP	
8	55910082A	TOOLS BOX	1	24/12/2009		DFR:N;MOD:M796 ABS;XST:AUS,EUR,JAP	
9	75940041A	RUBBER BAND, TOOLS KIT	1	23/02/2012		DFR:N;MOD:M796 ABS;XST:AUS,EUR,JAP	
10	59520081C	SEAT	1	23/02/2012		DFR:N;MOD:M796 ABS;XST:AUS,EUR,JAP	
11	86610301A	PAD	6	03/02/2010		DFR:N;MOD:M796 ABS;XST:AUS,EUR,JAP	
12	71314421A	SPACER	2	23/02/2012		DFR:N;MOD:M796 ABS;XST:AUS,EUR,JAP	
13	77915661BA	SCREW, SPECIAL	2	23/02/2012		DFR:N;MOD:M796 ABS;XST:AUS,EUR,JAP	
14	76410631B	RUBBER PAD	2	03/02/2010		DFR:N;MOD:M796 ABS;XST:AUS,EUR,JAP	

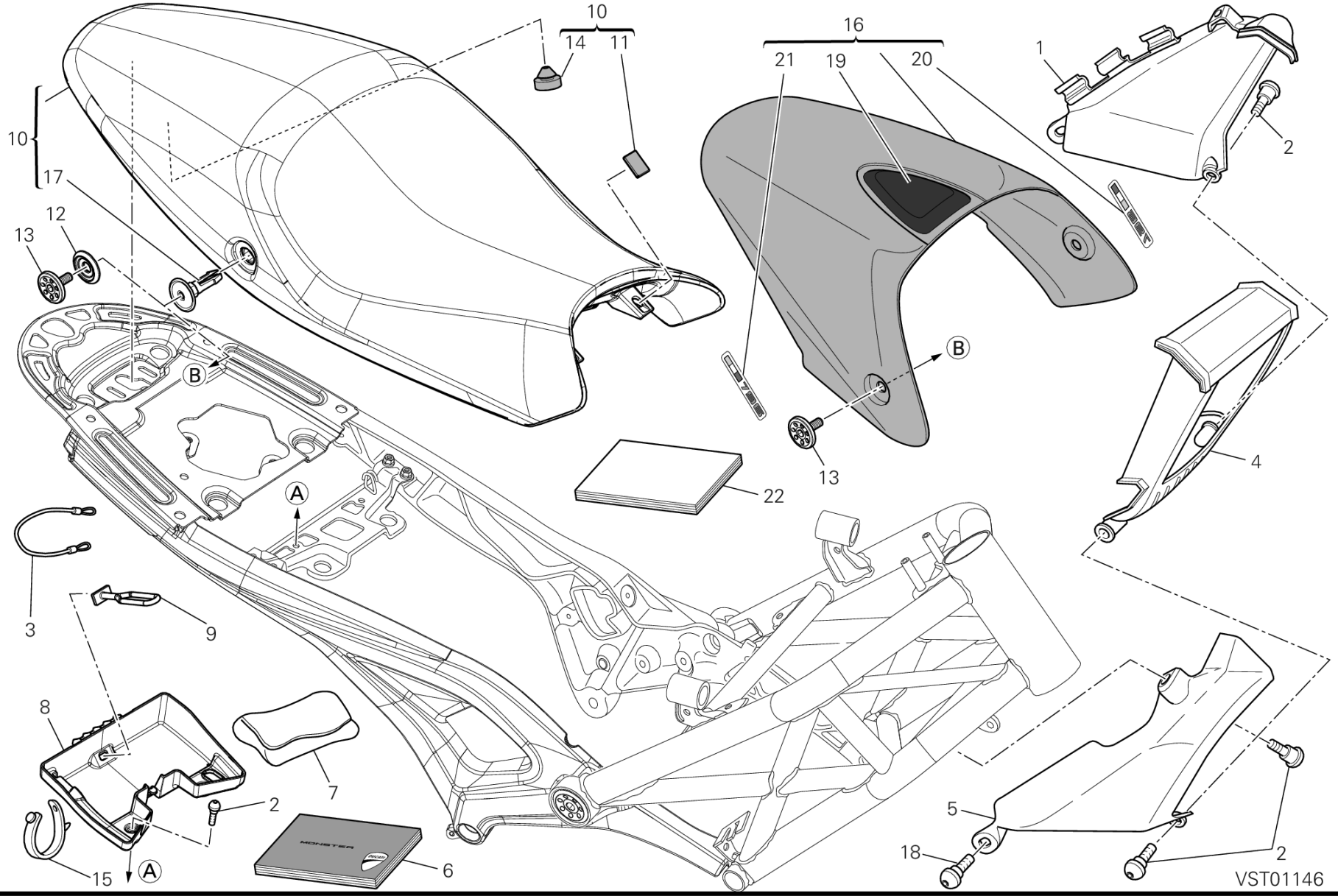
10
14
11
16
21
19
20
1
2
10
17
12
13
B
B
13
22
4
A
3
9
8
7
2
5
18
2
15
A
6
VST01146

POS.	CODE	DESCRIPTION	QTY	START DATE	END DATE	VALIDITY	NOTES
15	74110101A	CLAMP 70MM	1	23/02/2012		DFR:N;MOD:M796 ABS;XST:AUS,EUR,JAP	
16	59510981BT	COVER SEAT	1	23/02/2012		DFR:N;MOD:M796 ABS;XST:AUS,EUR,JAP	DIAMOND BLACK
	59510981BW	COVER SEAT	1	23/02/2012		DFR:N;MOD:M796 ABS;XST:AUS,EUR,JAP	ARTIC WHITE
	59510991AA	COVER SEAT	1	23/02/2012		DFR:N;MOD:M796 ABS;XST:AUS,EUR,JAP	ROSSO-RED-ROUGE-ROT-ROJO
17	68411012A	COLUMN	2	03/02/2010		DFR:N;MOD:M796 ABS;XST:AUS,EUR,JAP	
18	77211131A	SCREW	2	23/02/2012		DFR:N;MOD:M796 ABS;XST:AUS,EUR,JAP	
19	59510991A	SEAT BACK	1	24/12/2009		DFR:N;MOD:M796 ABS;XST:AUS,EUR,JAP	
20	43712021A	STICKER "796" L.H.	1	11/02/2010		DFR:N;MOD:M796 ABS;XST:AUS,EUR,JAP	
21	43712031A	STICKER "796" R.H.	1	11/02/2010		DFR:N;MOD:M796 ABS;XST:AUS,EUR,JAP	
22	91372261A	OWNER'S MANUAL	1	20/07/2012		DFR:N;MOD:M796 ABS;XST:AUS,EUR,JAP	BRA

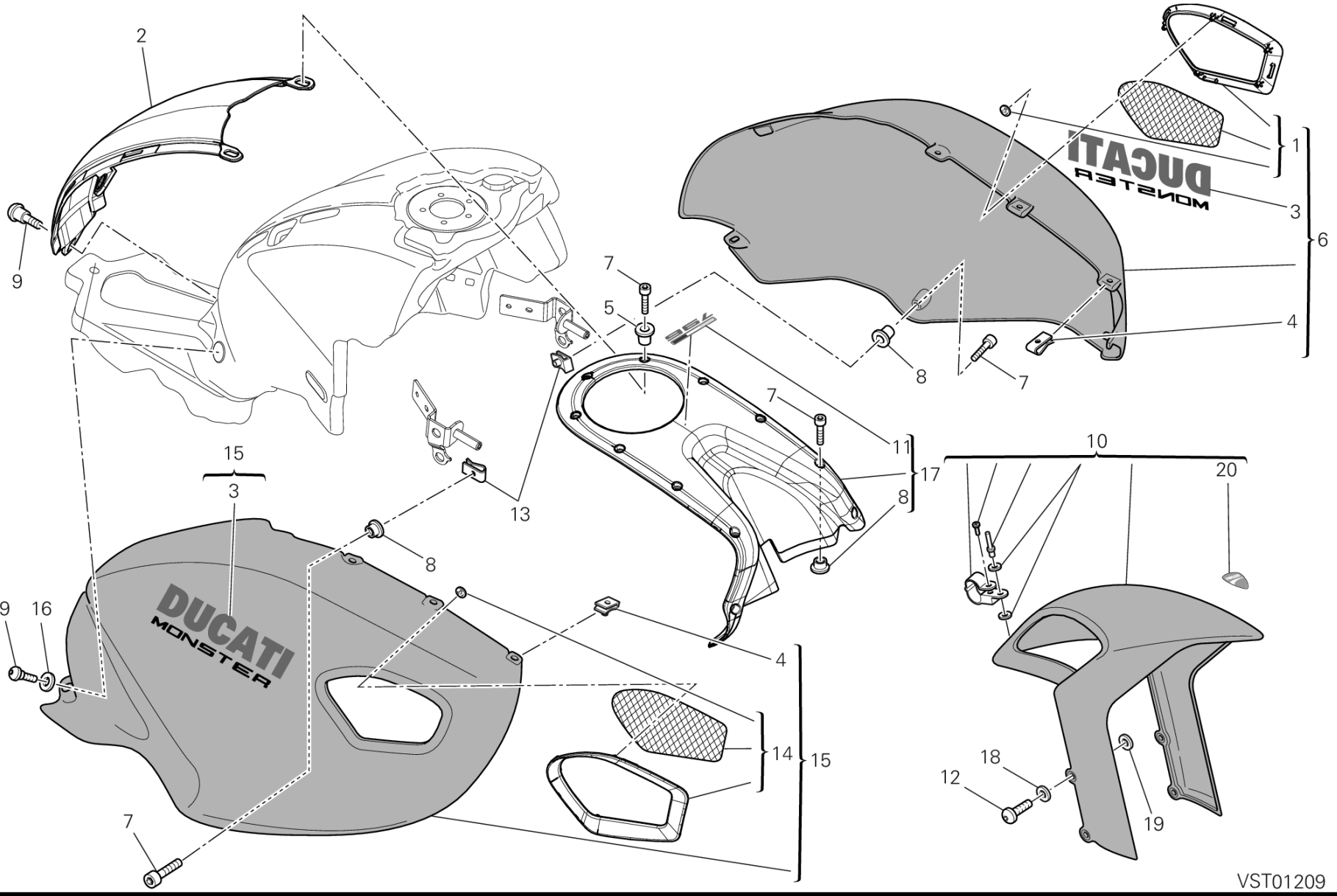
2
9
7
5
1
3
6
4
8
7
7
11
17
8
13
15
3
8
9
16
4
14
15
7
10
20
18
12
19
VST01209

POS.	CODE	DESCRIPTION	QTY	START DATE	END DATE	VALIDITY	NOTES
1	48420741A	AIR INTAKE LEFT	1	24/12/2009		DFR:N;MOD:M796 ABS;XST:AUS,EUR,JAP	
2	48012641A	COVER, FUEL TANK REAR	1	23/02/2012		DFR:N;MOD:M796 ABS;XST:AUS,EUR,JAP	
3	43510331AB	EMBLEM DUCATI	2			MOD:M796 ABS;XST:AUS,EUR,JAP	per ARTIC WHITE-for ARTIC WHITE-pour ARTIC WHITE-fur ARTIC WHITE-para ARTIC WHITE
	43510331AE	EMBLEM DUCATI	2			MOD:M796 ABS;XST:AUS,EUR,JAP	per DIAMOND BLACK-for DIAMOND BLACK-pour DIAMOND BLACK-fur DIAMOND BLACK-para DIAMOND BLACK
	43510331AW	EMBLEM DUCATI	2	24/12/2009		DFR:N;MOD:M796 ABS;XST:AUS,EUR,JAP	per ROSSO-for RED-pour ROUGE-fur ROT-para ROJO
4	85040471A	QUICK FASTENING M5	6	01/03/2012		DFR:N;MOD:M796 ABS;XST:AUS,EUR,JAP	
5	71611491A	SPACER	4	23/02/2012		DFR:N;MOD:M796 ABS;XST:AUS,EUR,JAP	
6	48012591DA	FAIRING, LH	1	23/02/2012		DFR:N;MOD:M796 ABS;XST:AUS,EUR,JAP	ROSSO-RED-ROUGE-ROT-ROJO
	48012591DT	FAIRING, LH	1	23/02/2012		DFR:N;MOD:M796 ABS;XST:AUS,EUR,JAP	DIAMOND BLACK
	48012591DV	FAIRING, LH	1	23/02/2012		DFR:N;MOD:M796 ABS;XST:AUS,EUR,JAP	ARTIC WHITE
7	77350393B	SCREW TCEIR M5X12	13	23/02/2012		DFR:N;MOD:M796 ABS;XST:AUS,EUR,JAP	
8	71614081A	SPACER 5X6.6X1.5	8	11/02/2010		DFR:N;MOD:M796 ABS;XST:AUS,EUR,JAP	
9	77210853B	SCREW TCEI M5X9	5	23/02/2012		DFR:N;MOD:M796 ABS;XST:AUS,EUR,JAP	
10	56420842BT	FRONT MUDGUARD	1	23/02/2012		DFR:N;MOD:M796 ABS;XST:AUS,EUR,JAP	DIAMOND BLACK
	56420842BW	FRONT MUDGUARD	1	23/02/2012		DFR:N;MOD:M796 ABS;XST:AUS,EUR,JAP	ARTIC WHITE
	56420852AA	FRONT MUDGUARD	1	23/02/2012		DFR:N;MOD:M796 ABS;XST:AUS,EUR,JAP	ROSSO-RED-ROUGE-ROT-ROJO

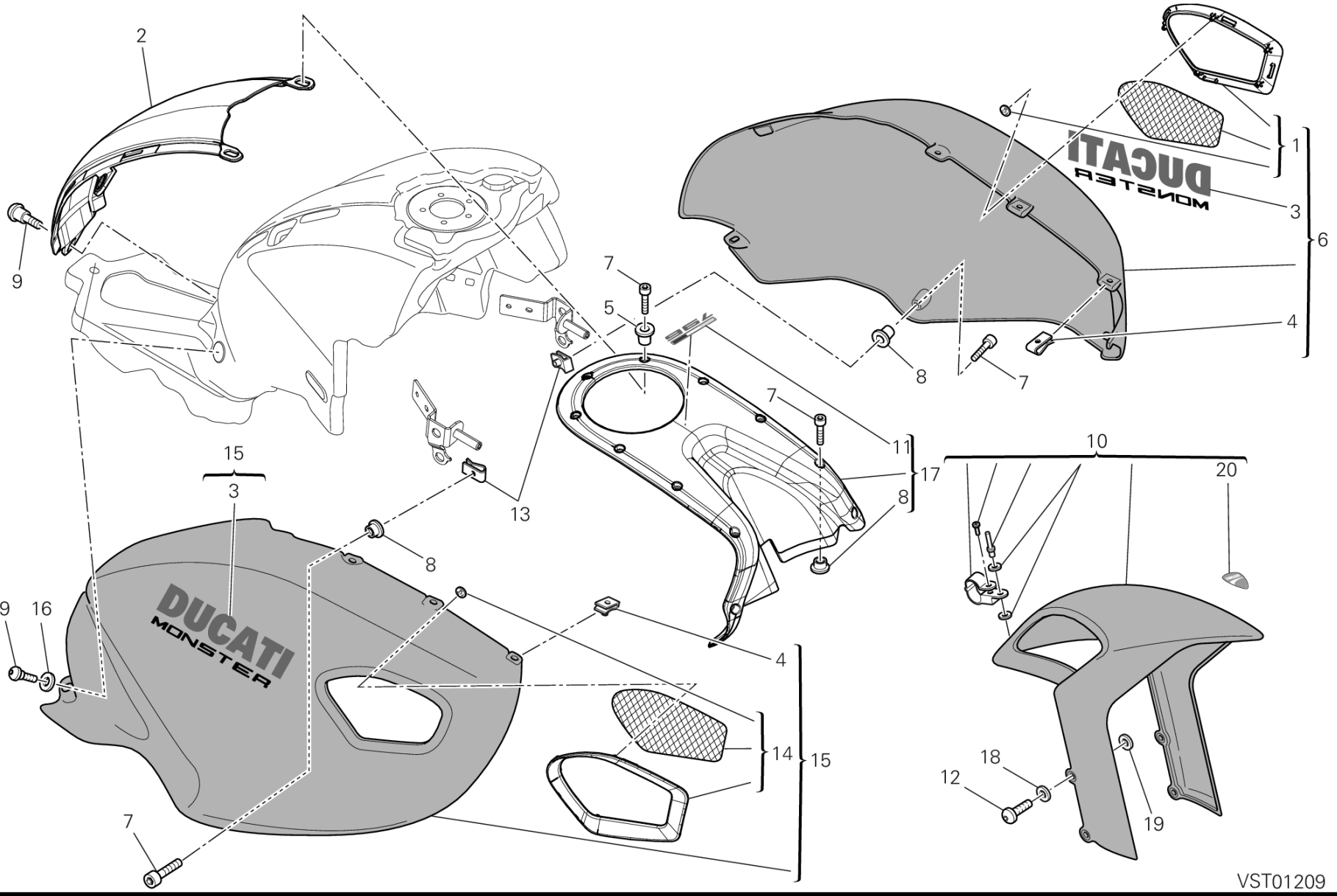
2
9
7
5
1
3
6
4
8
7
7
11
17
8
13
15
3
8
9
16
4
14
15
7
10
20
18
12
19
VST01209

POS.	CODE	DESCRIPTION	QTY	START DATE	END DATE	VALIDITY	NOTES
11	43814731A	STICKER "796"	1	11/02/2010		DFR:N;MOD:M796 ABS;XST:AUS,EUR,JAP	
12	77211261A	SCREW	4	23/02/2012		DFR:N;MOD:M796 ABS;XST:AUS,EUR,JAP	
13	85040551A	QUICK FASTENING	2	23/02/2012		DFR:N;MOD:M796 ABS;XST:AUS,EUR,JAP	
14	48420731A	AIR INTAKE RIGHT	1	24/12/2009		DFR:N;MOD:M796 ABS;XST:AUS,EUR,JAP	
15	48012591CA	FAIRING, RH	1	23/02/2012		DFR:N;MOD:M796 ABS;XST:AUS,EUR,JAP	ROSSO-RED-ROUGE-ROT-ROJO
	48012591CT	FAIRING, RH	1	23/02/2012		DFR:N;MOD:M796 ABS;XST:AUS,EUR,JAP	DIAMOND BLACK
	48012591CV	FAIRING, RH	1	23/02/2012		DFR:N;MOD:M796 ABS;XST:AUS,EUR,JAP	ARTIC WHITE
16	85212181A	WASHER, NYLON 9X14X1	2	23/02/2012		DFR:N;MOD:M796 ABS;XST:AUS,EUR,JAP	
17	48022631F	CAP FRONT	1	11/02/2010		DFR:N;MOD:M796 ABS;XST:AUS,EUR,JAP	
18	85611271A	WASHER	4	23/02/2012		DFR:N;MOD:M796 ABS;XST:AUS,EUR,JAP	
19	85211761A	WASHER 6.4X12.5X1.6	2	23/02/2012		DFR:N;MOD:M796 ABS;XST:AUS,EUR,JAP	
20	43814741A	EMBLEM DUCATI	1	11/02/2010		DFR:N;MOD:M796 ABS;XST:AUS,EUR,JAP	

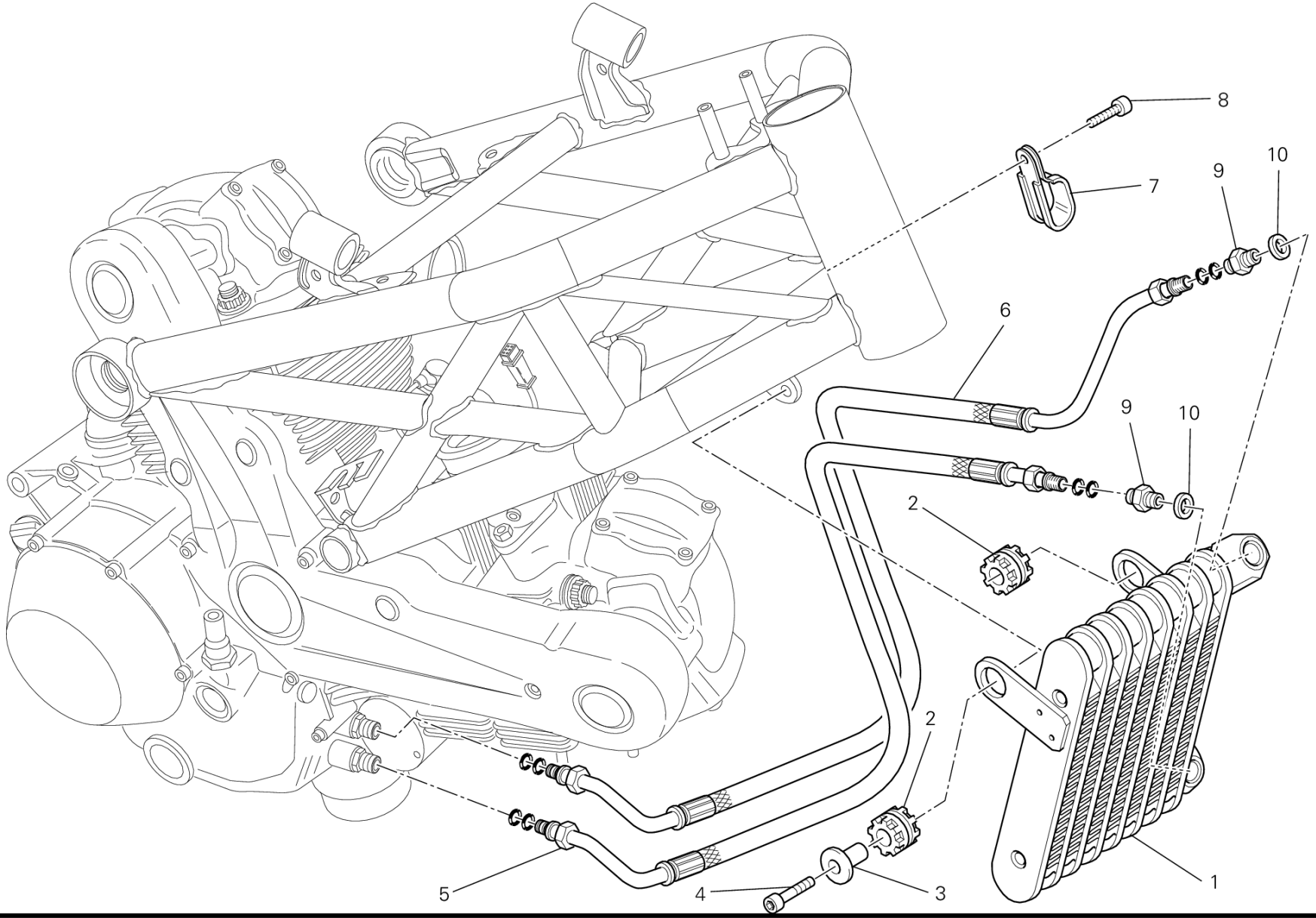
8
7
9
10
6
9
10
2
2
5
4
3
1

DRAWING 039 - OIL COOLER [MOD:M796 ABS;XST:AUS,EUR,JAP]

GROUP FRAME

POS.	CODE	DESCRIPTION	QTY	START DATE	END DATE	VALIDITY	NOTES
1	54840791A	OIL COOLER	1	23/02/2012		DFR:N;MOD:M796 ABS;XST:AUS,EUR,JAP	
2	76410241A	VIBRATION DAMPER PAD	2	23/02/2012		DFR:N;MOD:M796 ABS;XST:AUS,EUR,JAP	
3	71614091A	SPACER	1	23/02/2012		DFR:N;MOD:M796 ABS;XST:AUS,EUR,JAP	
4	77156698B	SCREW TCEIF M6X25	1	23/02/2012		DFR:N;MOD:M796 ABS;XST:AUS,EUR,JAP	
5	54910861A	OIL DELIVERY PIPE	1	23/02/2012		DFR:N;MOD:M796 ABS;XST:AUS,EUR,JAP	
6	54910871A	PIPE	1	23/02/2012		DFR:N;MOD:M796 ABS;XST:AUS,EUR,JAP	
7	74141751A	CLAMP	1	23/02/2012		DFR:N;MOD:M796 ABS;XST:AUS,EUR,JAP	
8	77150638B	SCREW TCEI M6X12	1	23/02/2012		DFR:N;MOD:M796 ABS;XST:AUS,EUR,JAP	
9	81510221A	NIPPLE, HOSEM14X1.5	2	23/02/2012		DFR:N;MOD:M796 ABS;XST:AUS,EUR,JAP	
10	78710111A	GASKET, ALUMINIUM 14X22X2	2	23/02/2012		DFR:N;MOD:M796 ABS;XST:AUS,EUR,JAP	

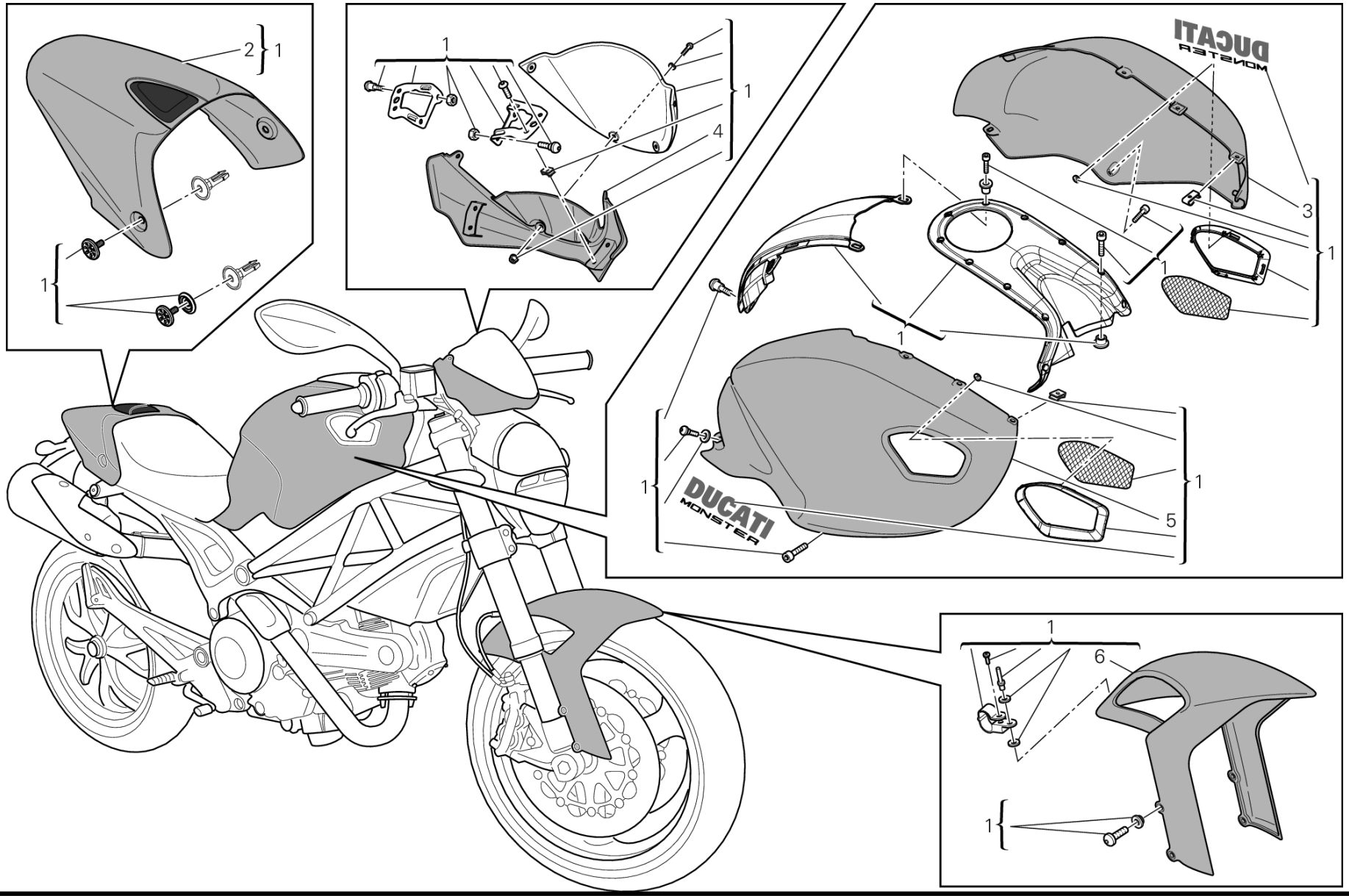
2
1
1
1
1
4
DUCATI
MONSTER
3
1
1
1
1
5
DUCATI
MONSTER
1
6
1
1

DRAWING 042 - ART KIT [MOD:M796 ABS;XST:AUS,EUR,JAP]

GROUP FRAME

POS.	CODE	DESCRIPTION	QTY	START DATE	END DATE	VALIDITY	NOTES
1	69924581AZ	DISPLAY COLOUR FAIRING	1			MOD:M796 ABS;XST:AUS,EUR,JAP	
	69924581AZZ	TOTEM FAIRING	1			MOD:M796 ABS;XST:AUS,EUR,JAP	
	69924581BZ	DISPLAY ART FAIRING	1			MOD:M796 ABS;XST:AUS,EUR,JAP	
	69924583AA	RED FAIRING	1			MOD:M796 ABS;XST:AUS,EUR,JAP	
	69924583AC	DUCATI CORSE FAIRING	1			MOD:M796 ABS;XST:AUS,EUR,JAP	
	69924583AD	DARMAH FAIRING	1			MOD:M796 ABS;XST:AUS,EUR,JAP	
	69924583AE	IOM78 FAIRING	1			MOD:M796 ABS;XST:AUS,EUR,JAP	
	69924583AF	SPORT 100 FAIRING	1			MOD:M796 ABS;XST:AUS,EUR,JAP	
	69924583AG	GOLD FAIRING	1			MOD:M796 ABS;XST:AUS,EUR,JAP	
	69924583AH	MONSTER ART FAIRING AMARANTH	1			MOD:M796 ABS;XST:AUS,EUR,JAP	
	69924583AI	IMOLA72 FAIRING	1			MOD:M796 ABS;XST:AUS,EUR,JAP	
	69924583AJ	PANTAH FAIRING	1			MOD:M796 ABS;XST:AUS,EUR,JAP	
	69924583AK	DARK FAIRING	1			MOD:M796 ABS;XST:AUS,EUR,JAP	
	69924583AL	MONSTER ART FAIRING MAUVE	1			MOD:M796 ABS;XST:AUS,EUR,JAP	
	69924583AM	MONSTER ART FAIRING RED MARLBORO	1			MOD:M796 ABS;XST:AUS,EUR,JAP	
	69924583AP	MONSTER ART FAIRING ORANGE	1			MOD:M796 ABS;XST:AUS,EUR,JAP	
	69924583AQ	MONSTER ART FAIRING BLUE	1			MOD:M796 ABS;XST:AUS,EUR,JAP	
	69924583AR	MONSTER ART FAIRING AZURE	1			MOD:M796 ABS;XST:AUS,EUR,JAP	
	69924583AS	MONSTER ART FAIRING SILVER	1			MOD:M796 ABS;XST:AUS,EUR,JAP	
	69924583AT	MACH1 FAIRING	1			MOD:M796 ABS;XST:AUS,EUR,JAP	
	69924583AV	MONSTER ART FAIRING GREEN	1			MOD:M796 ABS;XST:AUS,EUR,JAP	
	69924583AW	WHITE FAIRING	1			MOD:M796 ABS;XST:AUS,EUR,JAP	
	69924583AY	MONSTER ART FAIRING	1			MOD:M796 ABS;XST:AUS,EUR,JAP	
2	59530981A	BOX SEAT TAIL RAW	1	24/12/2009		DFR:N;MOD:M796 ABS;XST:AUS,EUR,JAP	
3	48032601B	LEFT FAIRING UNPAINTED	1	24/12/2009		DFR:N;MOD:M796 ABS;XST:AUS,EUR,JAP	
4	48130531A	COWLING UNPAINTED	1	24/12/2009		DFR:N;MOD:M796 ABS;XST:AUS,EUR,JAP	
5	48032591B	RIGHT FAIRING UNPAINTED	1	24/12/2009		DFR:N;MOD:M796 ABS;XST:AUS,EUR,JAP	
6	56430745A	FRONT MUDGUARD UNPAINTED	1	10/05/2010		DFR:N;MOD:M796 ABS;XST:AUS,EUR,JAP	

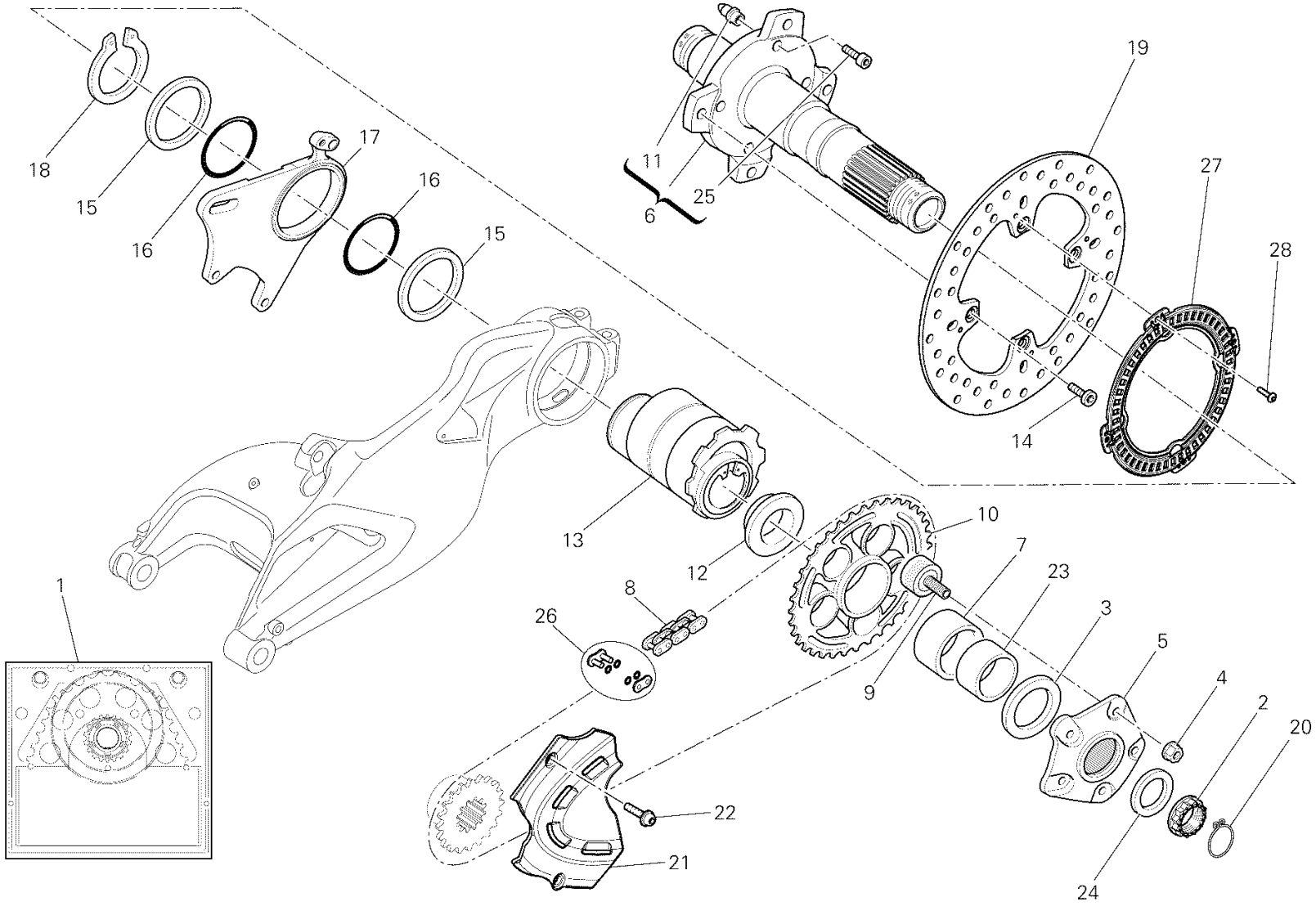
18
15
16
17
16
15
11
6
25
19
27
28
14
13
12
10
7
23
3
5
4
2
20
24
9
8
26
22
21
1

TEL00606

DRAWING 25A - REAR WHEEL SPINDLE [MOD:M796 ABS;XST:AUS,EUR,JAP]

GROUP FRAME

POS.	CODE	DESCRIPTION	QTY	START DATE	END DATE	VALIDITY	NOTES
1	67620791A	FINAL DRIVE KIT	1			MOD:M796 ABS;XST:AUS,EUR,JAP	
2	75011581AA	NUT	1	23/02/2012		DFR:N;MOD:M796 ABS;XST:AUS,EUR,JAP	
3	85210582A	WASHER	1	24/12/2009		DFR:N;MOD:M796 ABS;XST:AUS,EUR,JAP	
4	74840241AB	NUT M10X1.25X10	5	24/12/2009		DFR:N;MOD:M796 ABS;XST:AUS,EUR,JAP	
5	16014211A	REAR SPROCKET FLANGE	1	01/03/2010		DFR:N;MOD:M796 ABS;XST:AUS,EUR,JAP	
6	819Z0011B	REAR WHEEL SPINDLE	1	23/02/2012		DFR:N;MOD:M796 ABS;XST:AUS,EUR,JAP	
7	71210181A	BUSH	1	24/12/2009		DFR:N;MOD:M796 ABS;XST:AUS,EUR,JAP	
8	67640731A	CHAIN	1	23/02/2012		DFR:N;MOD:M796 ABS;XST:AUS,EUR,JAP	
9	70090551A	ABSORBER, HUB SHOCK	5			MOD:M796 ABS;XST:AUS,EUR,JAP	
10	49411341A	REAR SPROCKET	1	24/12/2009		DFR:N;MOD:M796 ABS;XST:AUS,EUR,JAP	
11	86310011D	PIN	4	24/12/2009		DFR:N;MOD:M796 ABS;XST:AUS,EUR,JAP	
12	71410411A	FINAL SPROKET SLEEVE	1	23/02/2012		DFR:N;MOD:M796 ABS;XST:AUS,EUR,JAP	
13	75620062A	CHAIN TIGHTENER	1			MOD:M796 ABS;XST:AUS,EUR,JAP	
14	77310061A	SCREW	4	23/02/2012		DFR:N;MOD:M796 ABS;XST:AUS,EUR,JAP	
15	85210591A	WASHER	2	19/04/2010		DFR:N;MOD:M796 ABS;XST:AUS,EUR,JAP	
16	88650031A	O-RING	2	19/04/2010		DFR:N;MOD:M796 ABS;XST:AUS,EUR,JAP	
17	82510431A	CALIPER HOLDER PLATE ABS	1	19/04/2010		DFR:N;MOD:M796 ABS;XST:AUS,EUR,JAP	
18	88450041A	CIRCLIP	1	19/04/2010		DFR:N;MOD:M796 ABS;XST:AUS,EUR,JAP	
19	49210051A	REAR BRAKE DISC ABS	1	23/02/2012		DFR:N;MOD:M796 ABS;XST:AUS,EUR,JAP	

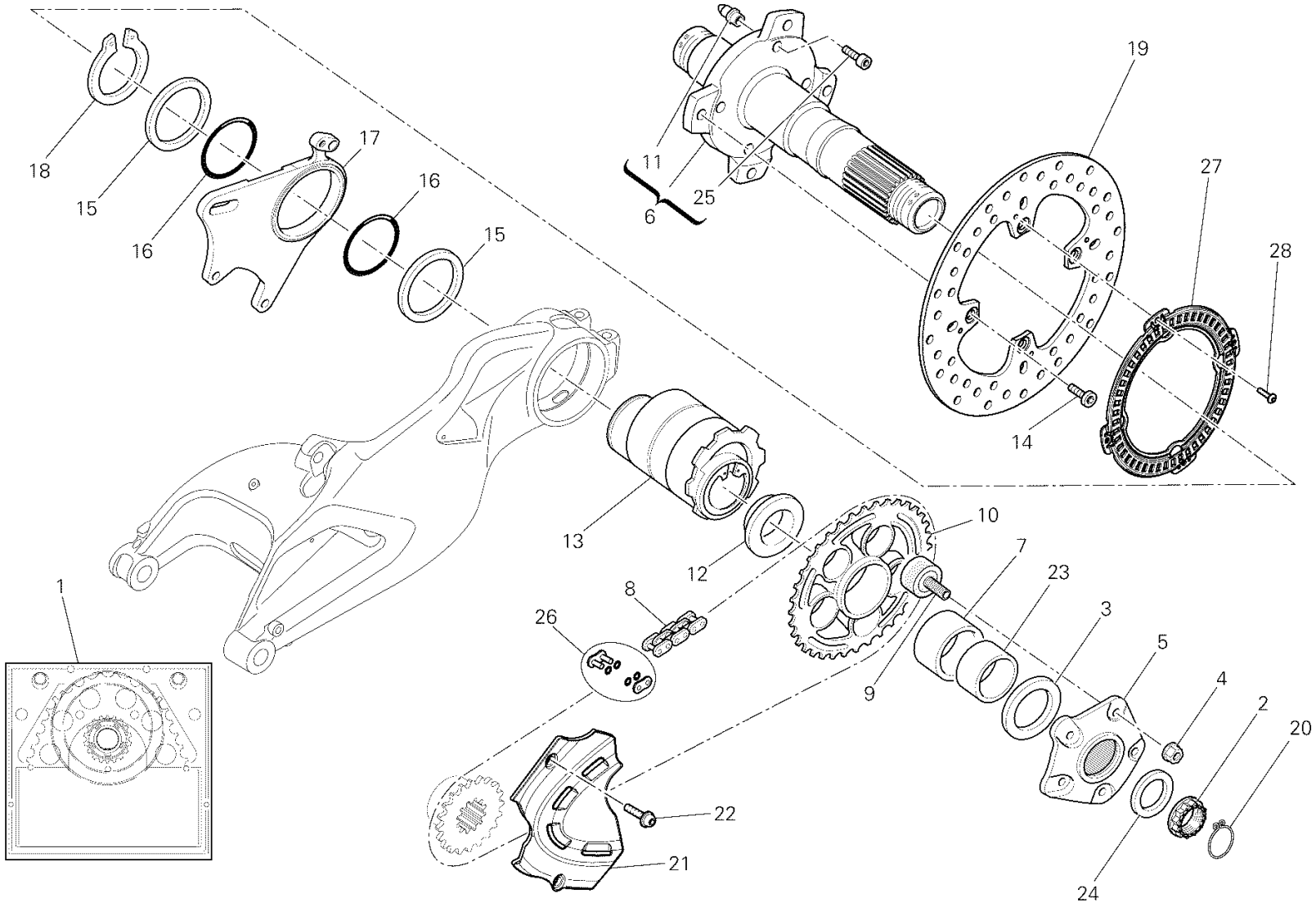
18
15
16
17
16
15
11
6
25
19
27
28
14
13
12
10
7
23
3
5
4
2
20
24
9
8
26
22
21
1

TEL00606

POS.	CODE	DESCRIPTION	QTY	START DATE	END DATE	VALIDITY	NOTES
20	75910081A	RETAINER 35MM	1	23/02/2012		DFR:N;MOD:M796 ABS;XST:AUS,EUR,JAP	
21	24713311A	CHAIN PINION COVER	1	23/02/2012		DFR:N;MOD:M796 ABS;XST:AUS,EUR,JAP	
22	77550213C	SCREW TBEI M6X16	2	23/02/2012		DFR:N;MOD:M796 ABS;XST:AUS,EUR,JAP	
23	71110671A	BUSH	1	24/12/2009		DFR:N;MOD:M796 ABS;XST:AUS,EUR,JAP	
24	85210551A	WASHER	1	23/02/2012		DFR:N;MOD:M796 ABS;XST:AUS,EUR,JAP	
25	77210051B	SCREW	4	24/12/2009		DFR:N;MOD:M796 ABS;XST:AUS,EUR,JAP	
26	67740141A	CHAIN LINK	1	24/12/2009		DFR:N;MOD:M796 ABS;XST:AUS,EUR,JAP	
27	50410071A	REAR PHONIC WHEEL	1	23/02/2012		DFR:N;MOD:M796 ABS;XST:AUS,EUR,JAP	
28	77510631A	SCREW TBEI M5X8	4	23/02/2012		DFR:N;MOD:M796 ABS;XST:AUS,EUR,JAP	

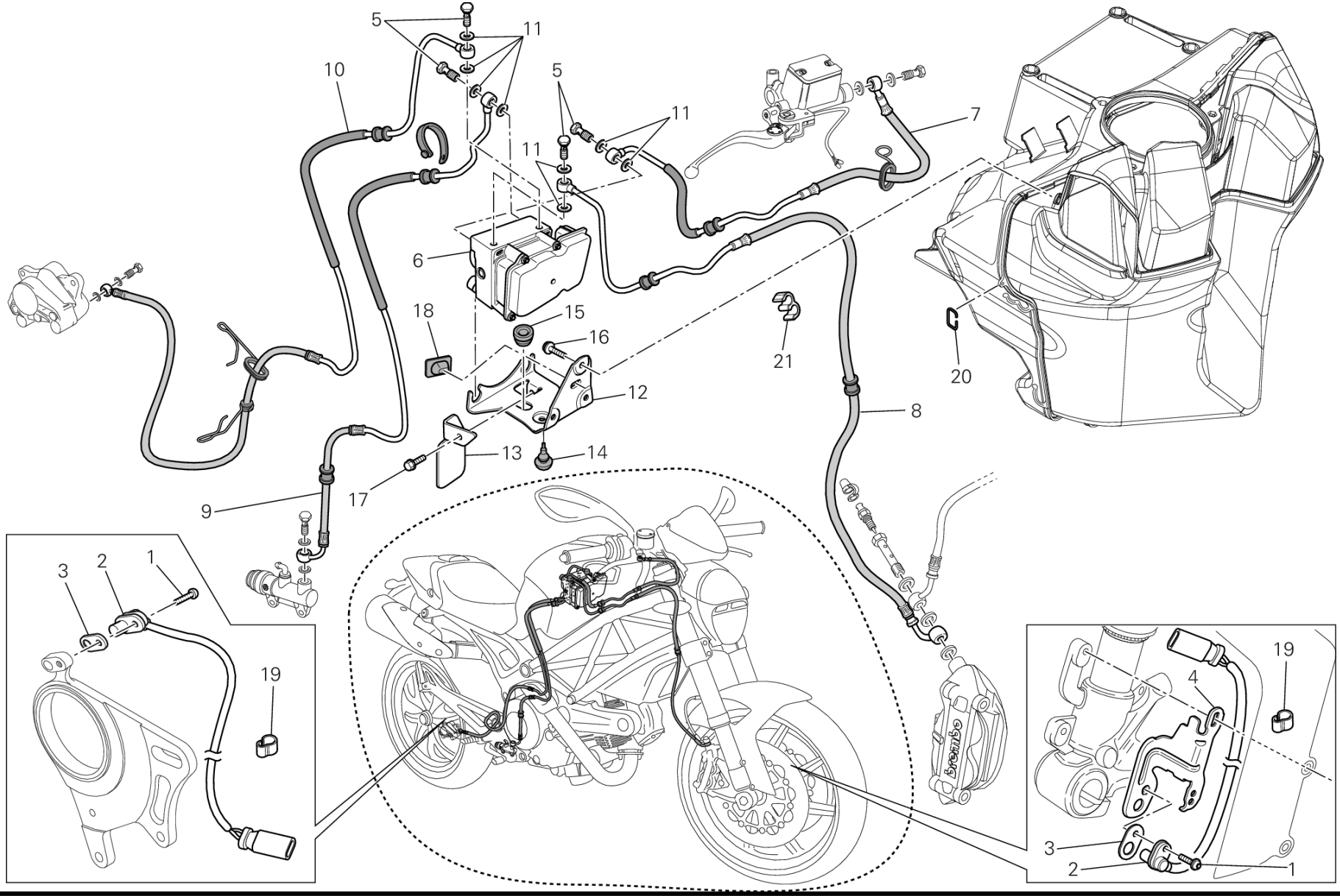
5
11
10
5
11
11
7
6
18
15
16
21
20
12
8
13
14
17
9
3
2
1
19
19
4
3
2
1

POS.	CODE	DESCRIPTION	QTY	START DATE	END DATE	VALIDITY	NOTES
1	77210423C	SCREW TBEIF M6X16	2	23/02/2012		DFR:N;MOD:M796 ABS;XST:AUS,EUR,JAP	
2	55212121B	SENSOR, FR WHEEL ABS	1	23/02/2012		DFR:N;MOD:M796 ABS;XST:AUS,EUR,JAP	
3	71319201A	GASKET 0.5 MM	10	23/02/2012		DFR:N;MOD:M796 ABS;XST:AUS,EUR,JAP	
4	83015422A	HOLDER SENSOR ABS FRONT	1	23/02/2012		DFR:N;MOD:M796 ABS;XST:AUS,EUR,JAP	
5	77913661AB	BOLT, BRAKE HOSE M10X1	4	26/04/2010		DFR:N;MOD:M796 ABS;XST:AUS,EUR,JAP	
6	54240231A	CONTROL UNIT ABS	1	23/02/2012		DFR:N;MOD:M796 ABS;XST:AUS,EUR,JAP	
7	61841062A	FRONT MASTER CYLINDER - CPU LINE	1	26/04/2010		DFR:N;MOD:M796 ABS;XST:AUS,EUR,JAP	
8	61840941A	CPU - FRONT CALIPERS LINE	1	26/04/2010		DFR:N;MOD:M796 ABS;XST:AUS,EUR,JAP	
9	61940431B	REAR MASTER CYLINDER - CPU LINE	1	26/04/2010		DFR:N;MOD:M796 ABS;XST:AUS,EUR,JAP	
10	61940461B	CPU - REAR CALIPER LINE	1	26/04/2010		DFR:N;MOD:M796 ABS;XST:AUS,EUR,JAP	
11	85250241A	WASHER 10X14X1	8	26/04/2010		DFR:N;MOD:M796 ABS;XST:AUS,EUR,JAP	
12	83015691A	HOLDER ABS	1	23/02/2012		DFR:N;MOD:M796 ABS;XST:AUS,EUR,JAP	
13	83015761B	BRACKET FUSE	1	23/02/2012		DFR:N;MOD:M796 ABS;XST:AUS,EUR,JAP	
14	86640031A	RUBBER PAD	1	23/02/2012		DFR:N;MOD:M796 ABS;XST:AUS,EUR,JAP	
15	86640051A	RUBBER PAD	1	23/02/2012		DFR:N;MOD:M796 ABS;XST:AUS,EUR,JAP	
16	77950461A	SCREW TBEI M6X12	3	23/02/2012		DFR:N;MOD:M796 ABS;XST:AUS,EUR,JAP	
17	77250718B	SCREW TEF M5X10	1	23/02/2012		DFR:N;MOD:M796 ABS;XST:AUS,EUR,JAP	

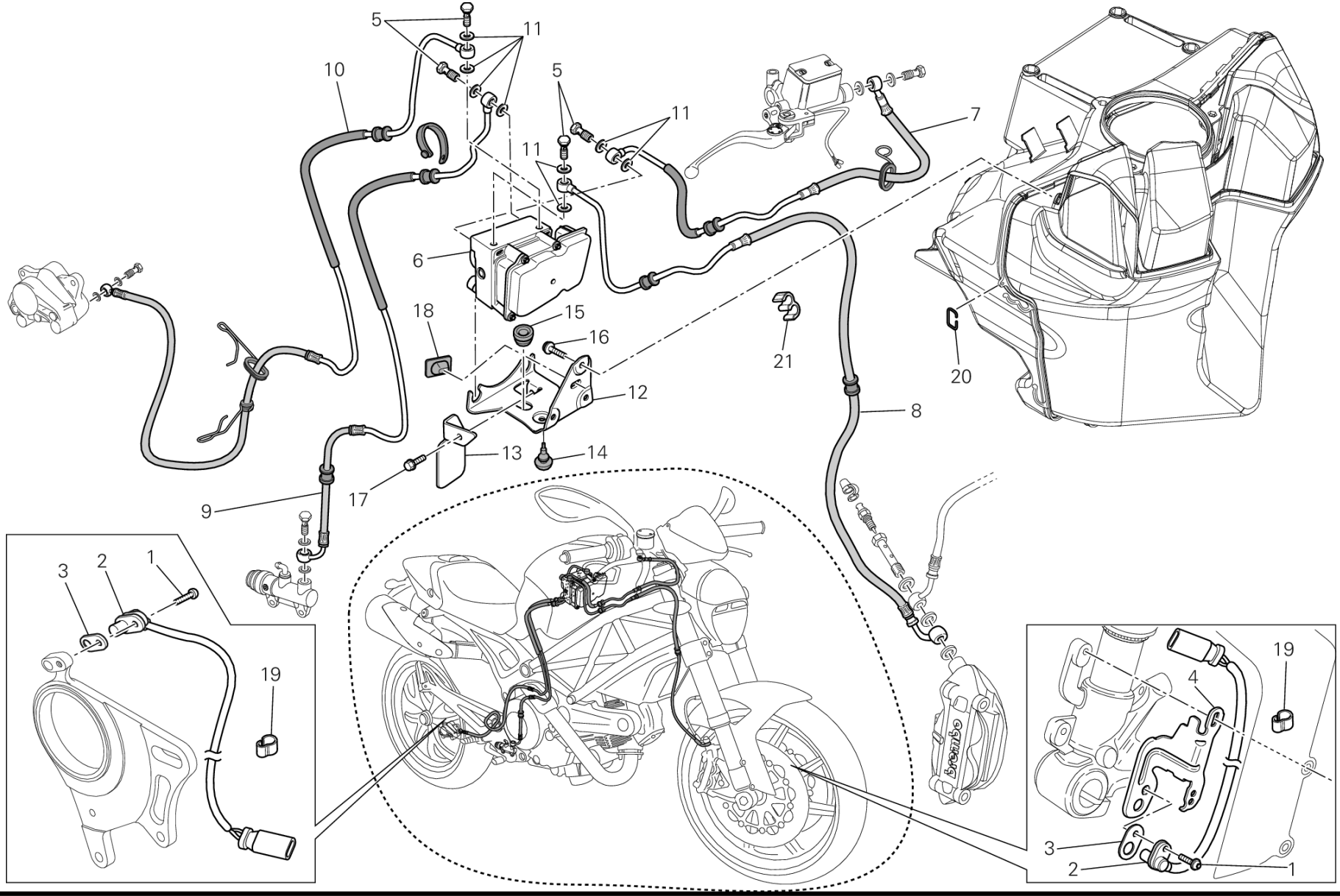
5
11
10
5
11
11
7
6
18
15
16
21
20
12
8
13
14
17
9
3
2
1
19
19
4
3
2
1

POS.	CODE	DESCRIPTION	QTY	START DATE	END DATE	VALIDITY	NOTES
18	86610301A	PAD	1	23/02/2012		DFR:N;MOD:M796 ABS;XST:AUS,EUR,JAP	
19	75840601A	FAIRLEAD	10	23/02/2012		DFR:N;MOD:M796 ABS;XST:AUS,EUR,JAP	
20	75910261A	CLIP	1	23/02/2012		DFR:N;MOD:M796 ABS;XST:AUS,EUR,JAP	
21	75840611A	FAIRLEAD	1	23/02/2012		DFR:N;MOD:M796 ABS;XST:AUS,EUR,JAP	

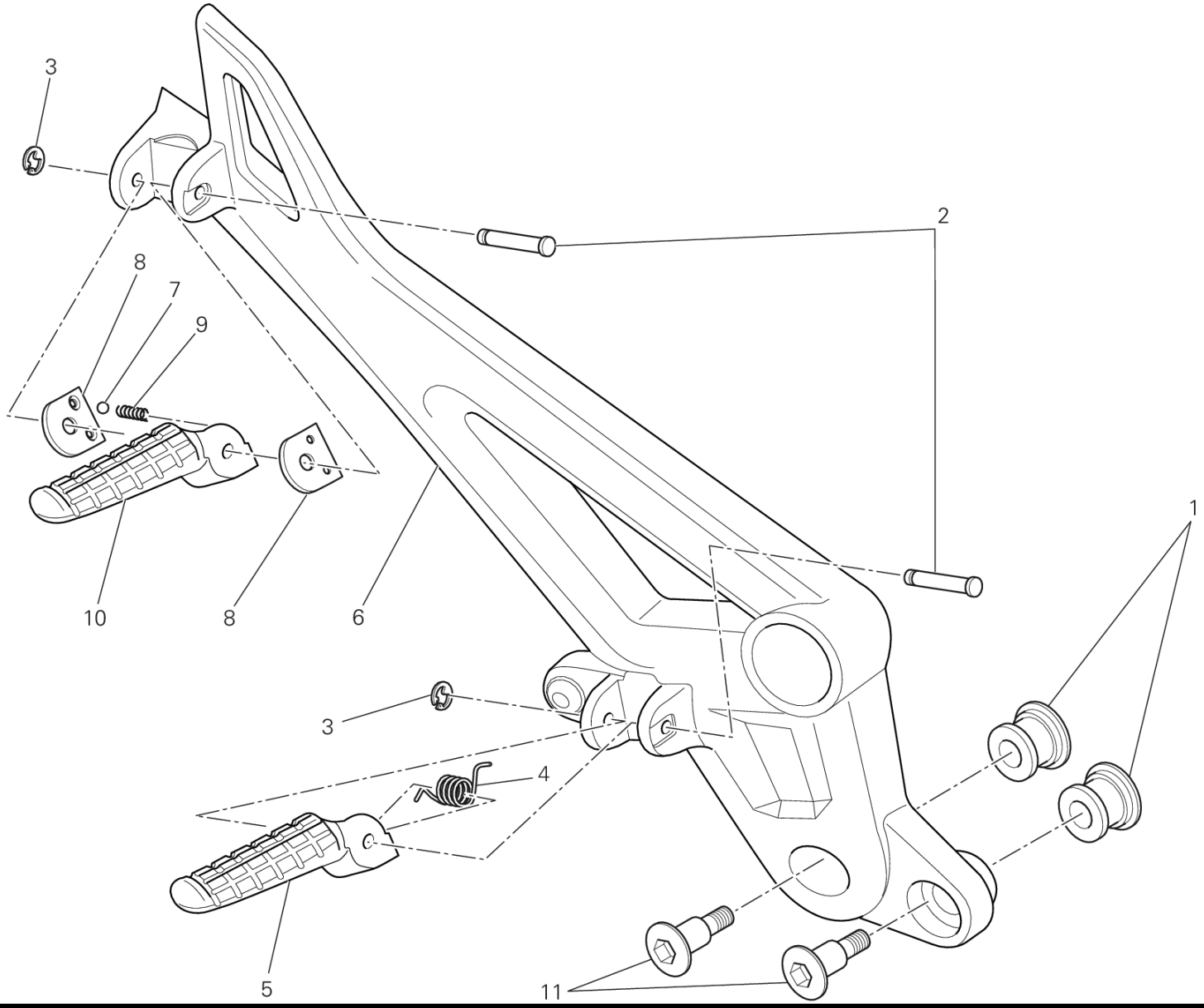
3
2
8
7
9
10
8
6
1
3
4
5
11

DRAWING 31A - FOOTRESTS, RIGHT [MOD:M796 ABS;XST:AUS,EUR,JAP]

GROUP FRAME

POS.	CODE	DESCRIPTION	QTY	START DATE	END DATE	VALIDITY	NOTES
1	70010491A	DAMPER	2	24/12/2009		DFR:N;MOD:M796 ABS;XST:AUS,EUR,JAP	
2	82110901B	FOOTREST PIN	2	24/12/2009		DFR:N;MOD:M796 ABS;XST:AUS,EUR,JAP	
3	88450031A	CIRCLIP E-TYPE	2	24/12/2009		DFR:N;MOD:M796 ABS;XST:AUS,EUR,JAP	
4	79914991A	SPRING. FOOTREST	1	24/12/2009		DFR:N;MOD:M796 ABS;XST:AUS,EUR,JAP	
5	46410451A	FOOTREST, FRONT RH	1	24/12/2009		DFR:N;MOD:M796 ABS;XST:AUS,EUR,JAP	
6	82411441C	BRACKET, RIGHT FOOT REST HOLDER	1	24/12/2009		DFR:N;MOD:M796 ABS;XST:AUS,EUR,JAP	
7	84740021A	BALL	1	24/12/2009		DFR:N;MOD:M796 ABS;XST:AUS,EUR,JAP	
8	82711611B	PLATE	2	24/12/2009		DFR:N;MOD:M796 ABS;XST:AUS,EUR,JAP	
9	79910241A	SPRING	1	24/12/2009		DFR:N;MOD:M796 ABS;XST:AUS,EUR,JAP	
10	46510601A	REAR RIGHT FOOTREST	1	24/12/2009		DFR:N;MOD:M796 ABS;XST:AUS,EUR,JAP	
11	77914181AA	SCREW, SPECIAL	2	04/05/2012		DFR:N;MOD:M796 ABS;XST:AUS,EUR,JAP	

CODE	NO. TABLE	POS.
000049654	027	2
000049655	028	10
025070223	016	12
025147054	003	1
027291090	002	8
036749275	010	11
037084005	020	1
040009050	002	21
040029125	002	17
040029126	002	17
061950065	012	15
064770010	014	12
064770010	015	20
066013143	002	9
066013165	002	25
066047290	006	6
066049268	010	13
066549680	005	8
067016145	003	7
067016150	003	3
067016155	003	19
067016170	003	17
067049310	009	17
069191030	018	10
069191030	034	25
075949280	009	15
076592205	002	21
079913110	002	27
11210801AA	006	8
11210801AB	006	8
11710991A	031	4
11720611A	029	19
11721192A	004	16
12021601B	007	4
12021611B	007	8
12111741A	007	2
12113031A	007	3
12120531B	007	1
12221611C	007	9
140Z0011A	016	11
14621791A	006	1
147Z0011A	008	9
14813182A	013	16
14813192A	013	9
14910331A	003	2
14910341A	003	25
15021011A	003	27
15021021A	003	26
15820251A	006	5
16010571A	012	13
16011051A	013	19
16014211A	25A	5
16023791B	036	8
17010511A	006	16
17121081A	008	10
17211081A	003	10
17211091A	003	8
17211101A	003	5
17211111A	003	9
17211121A	003	18
17211131A	003	24
17211141A	003	22
17211151A	003	21
17211161A	003	20
17211171A	003	23
173Z0011A	012	2
174Z0021A	009	1
176Z0011A	012	10
18010081A	002	24
180Z0011A	002	11
180Z0021A	002	12
182Z0042A	002	18
18410051A	029	15
18710021A	027	11
18710021A	028	21
19020161A	004	7
19420201A	004	5
19540021A	027	16
19540021A	028	3
19540031C	004	19
19610241A	004	10
19610251A	004	20
19810331A	004	12
208Z0011A	014	14
208Z0011A	015	14
209Z0011A	014	16
209Z0011A	015	18
21010752B	014	20
21010752B	015	6
21110752C	014	21
21110752C	015	7
22522641E	010	1
23520402AC	013	12
24020392A	014	10
24020392A	015	12
24221023CD	011	19
24321181EC	005	1
24510791A	008	1
24510801A	008	4
24510812A	013	5
24510822A	013	6
24612022A	034	8
24612041B	020	42
24712242A	023	1
24712242A	23A	1
24713221A	022	13
24713231A	021	2
24713285A	036	5
24713311A	25A	21
24713331A	023	9
24713331A	23A	9
24713411A	022	24
24713631A	026	33
25440012A	005	4
25510233A	008	15
25510243A	013	3
26440143B	011	1
27040115A	012	1
276Z0021A	012	16
28040231A	016	10
28240833A	016	1
28340201A	016	23
28440081A	016	2
28620401A	018	14
28641991A	019	21
28641991F	019	21
28641991G	019	21
28642021A	019	21
28740241B	016	8
30122871AA	014	17
30122881AA	015	17
30310681AA	014	4
30310681AA	015	3
30310681AB	014	4
30310681AB	015	3
30310681AC	014	4
30310681AC	015	3
30410901A	014	19
30410901A	015	5
30410901AB	014	19
30410901AB	015	5
30410901AC	014	19
30410901AC	015	5
30410911A	014	3
30410911A	015	4
30410911AB	014	3
30410911AB	015	4
30410911AC	014	3
30410911AC	015	4
34110681A	026	23
34220543A	026	3
34420461A	024	1
34520461A	024	2
34913521A	024	17
34913531A	024	4
34913541A	024	7
34913551A	024	6
34913561A	024	5
34913571A	024	8
34913581A	024	15
34913591A	024	16
34913601A	024	9
34913611A	024	10
34913621A	024	3
34913631A	024	20
34913641A	024	19
34913651A	024	18
34913661A	024	14
34913671A	024	21
34921001A	024	12
34921011A	024	13
34921041A	024	11
34921051A	024	22
36010891AA	026	24
36011271AA	026	31
36011283B	026	16

ALPHANUMERIC INDEX

CODE	NO. TABLE	POS.
36520802A	033	1
36910081A	032	18
37010911B	032	8
38010151A	019	3
38940191A	018	5
38940201A	018	5
38940211A	018	5
38940221A	018	5
38940241A	018	5
39040111A	022	11
39040162A	023	24
39040162A	23A	24
39040191A	022	10
39040211A	022	15
39040211A	023	16
39040211A	23A	16
39040281A	022	9
39110031A	023	26
39110031A	23A	27
39520132C	019	11
39740031B	019	15
40610792A	021	3
42020008A	029	28
42540151A	036	10
42610191A	034	9
43313631A	032	21
43313631B	032	21
43510331AB	038	3
43510331AE	038	3
43510331AW	038	3
43712021A	037	20
43712031A	037	21
43814721A	025	19
43814731A	038	11
43814741A	038	20
44211641B	034	3
44440035A	009	20
44610191A	032	1
44610201A	032	22
44610211A	032	23
44710771A	032	20
44910591A	003	12
45120201A	008	7
45120211A	008	6

CODE	NO. TABLE	POS.
45520181A	002	4
45610461B	031	15
45622021AB	031	7
45720461AB	029	9
46013242B	020	13
46013381A	016	6
46013421A	23A	30
46013541A	032	9
46013571A	032	10
46013681A	036	15
46014021A	034	22
46014031A	034	18
46014091A	020	12
46014101A	020	33
46210021A	026	22
46230105A	036	14
46320222A	010	34
46320222A	016	14
46410451A	31A	5
46410461A	031	5
46510601A	31A	10
46510611A	031	2
47022041AA	030	1
47110121D	030	10
47110131D	030	7
48012591CA	038	15
48012591CT	038	15
48012591CV	038	15
48012591DA	038	6
48012591DT	038	6
48012591DV	038	6
48012641A	038	2
48022631F	038	17
48032591B	042	5
48032601B	042	3
48110261BT	021	10
48110261BW	021	10
48130531A	042	4
48410681A	037	5
48410691A	037	1
48410701A	037	4
48420731A	038	14
48420741A	038	1
48610721A	005	18

CODE	NO. TABLE	POS.
48710261B	021	13
49210051A	25A	19
49241011A	025	5
49411341A	25A	10
49720012A	025	3
49720031A	025	16
50121301AB	025	10
50211331AB	025	7
50410051A	025	18
50410071A	25A	27
51016391B	018	11
51016581A	002	16
51017261A	018	6
51310221A	019	10
51410581A	019	16
51410641A	019	13
51640042B	018	4
51840051B	026	37
52010172B	022	21
52340222A	026	8
52340232A	026	9
52510342A	023	2
52510342A	23A	2
52910061B	023	13
52910061B	23A	13
53010225A	022	14
53010225A	023	4
53010225A	23A	4
53010235A	022	20
53010235A	023	5
53010235A	23A	5
53910211B	002	6
53910234B	017	5
53940031C	029	13
53940302A	005	6
53940341A	027	13
53940631A	028	5
54040111C	018	7
54140101A	018	15
54240231A	28A	6
54840791A	039	1
54910861A	039	5
54910871A	039	6
55211491A	020	2

CODE	NO. TABLE	POS.
55212121B	28A	2
55240121A	016	7
55240482A	036	12
55241321B	010	37
55241441A	016	21
55241452A	007	12
55610181D	017	9
55610571A	017	3
55620511A	017	1
55910082A	037	8
56110281A	023	3
56110281A	23A	3
56110441A	023	6
56110441A	23A	6
56420842BT	038	10
56420842BW	038	10
56420852AA	038	10
56430745A	042	6
56510431A	032	13
57012891A	020	3
57112771A	020	4
57211581B	020	5
57313131C	020	7
57313141A	020	7
57413081A	020	8
57413101C	020	8
57610651A	020	28
57610661A	020	27
58540011A	029	23
58631712F	035	1
59013131A	034	12
59013291A	036	3
59013301A	036	4
59013311B	035	7
59013321B	035	4
59013331B	035	6
59013411A	016	22
59013431A	034	16
59310601B	010	46
59320621B	010	33
59340301A	020	37
59510981BT	037	16
59510981BW	037	16
59510991A	037	19

CODE	NO. TABLE	POS.
59510991AA	037	16
59520081C	037	10
59530981A	042	2
59810121A	023	21
59810121A	23A	21
59820611A	023	8
59820611A	23A	8
59821141A	035	16
59840291A	026	18
59840341A	026	39
61041031A	028	7
61041041A	028	18
61140201A	029	20
61240052A	027	12
61240052A	028	22
61240081A	029	31
61240141A	028	20
61240161A	029	30
61240171A	028	8
61340381A	029	32
61340611A	028	19
61610021A	035	5
61840871A	028	24
61840941A	28A	8
61841062A	28A	7
61940431B	28A	9
61940461B	28A	10
62440651A	028	1
62540041A	029	17
62640131A	029	26
62640591A	028	11
62640601A	027	3
62640601A	028	6
62640611A	027	7
62640701A	028	2
62640711A	027	4
63040511A	027	1
63140161A	029	3
63210541A	027	6
65010071C	026	25
65110101A	026	14
65240211A	026	30
65420321A	026	20
65610951A	026	26
65620121A	026	15
65840021B	026	29
66910011E	014	18
66910011E	015	15
67040351A	019	5
67110282B	019	9
67110312B	019	4
67210231A	019	23
67210241A	019	26
67620791A	25A	1
67640731A	25A	8
67740141A	25A	26
68010131A	006	10
68010131A	008	5
68010131A	013	8
68411012A	037	17
69720241A	037	7
69923451A	036	11
69924531A	011	9
69924581AZ	042	1
69924581AZZ	042	1
69924581BZ	042	1
69924583AA	042	1
69924583AC	042	1
69924583AD	042	1
69924583AE	042	1
69924583AF	042	1
69924583AG	042	1
69924583AH	042	1
69924583AI	042	1
69924583AJ	042	1
69924583AK	042	1
69924583AL	042	1
69924583AM	042	1
69924583AP	042	1
69924583AQ	042	1
69924583AR	042	1
69924583AS	042	1
69924583AT	042	1
69924583AV	042	1
69924583AW	042	1
69924583AY	042	1
69926101A	030	20
70010391A	032	6
70010481B	022	1
70010491A	031	1
70010491A	31A	1
70010541A	026	10
70090551A	25A	9
70140031A	012	3
70140051A	003	4
70140411A	012	7
70240401A	010	9
70240921A	010	29
70240931A	010	25
70241231A	026	6
70250081A	010	20
70250081A	011	3
70250151A	004	14
70250381A	004	6
70250621A	025	8
70310131A	026	12
70310481A	034	7
70310491A	030	5
70350062A	008	18
70350062A	013	1
71110671A	25A	23
71110951A	010	32
71111261A	007	11
71111281A	010	39
71111601A	005	13
71111601A	011	18
71111721A	007	7
71112641A	019	1
71210181A	25A	7
71210341A	029	14
71210341A	031	13
71310141E	003	11
71311191A	004	15
71311401A	010	14
71311961A	025	17
71311973A	025	2
71312661A	003	15
71314361A	020	23
71314421A	037	12
71314431A	23A	32
71319071A	008	22
71319151A	002	29
71319201A	28A	3
71319211A	032	30
71319261A	004	17
71410271A	025	15
71410411A	25A	12
71410941A	025	9
71610221B	019	19
71610221B	034	5
71610732A	008	13
71610991A	008	17
71611071A	020	25
71611461AB	032	25
71611491A	038	5
71611521A	019	14
71614061A	022	25
71614081A	038	8
71614091A	039	3
71614151A	030	21
71614161A	020	17
71614161A	030	16
71614211B	034	15
71614231A	020	47
71614241A	020	34
720941616	010	10
73210071A	037	3
73210261A	020	38
735001440	012	11
735001542	002	15
735033380	010	18
735033380	011	2
73740242A	008	19
74110101A	020	40
74110101A	037	15
74110131A	020	39
74110551A	029	24
74140381A	018	12
74140431A	029	4
74140671A	016	17
74141371A	020	16
74141711A	034	11
74141751A	039	7
74141801A	016	3
74141811A	034	1
742240570	006	7

ALPHANUMERIC INDEX

CODE	NO. TABLE	POS.
74640081A	020	20
74750011AB	031	10
74750031A	029	10
74750051B	029	25
74750051B	031	14
74750071A	026	1
74810141C	025	1
74810391A	016	15
74810401A	002	23
74810401A	030	11
74810501A	010	8
74840021A	030	3
74840241AB	026	11
74840241AB	033	4
74840241AB	25A	4
74840331A	020	9
74840341B	032	16
74910021A	026	32
74940041A	021	6
74941108B	036	6
74941128B	020	31
74941458C	017	10
74950011B	023	12
74950011B	23A	12
74950041A	031	17
75010071A	004	8
75010121D	006	14
75010281A	021	11
75011531A	030	14
75011551A	023	28
75011551A	23A	28
75011581AA	25A	2
75011591AA	025	13
75011601A	008	12
75011611A	006	13
75050011B	022	3
75050051A	019	25
751202567	010	12
75620062A	25A	13
757941542	010	17
75810432A	036	1
75810451A	002	31
75810461A	022	7
75810471C	011	12
75810481A	008	20
75810521AA	032	26
75810531A	032	28
75810541B	032	27
75810571B	034	14
75840161A	032	11
75840201A	011	8
75840201A	030	19
75840601A	28A	19
75840611A	28A	21
75910081A	25A	20
75910091A	025	12
75910231A	019	17
75910251A	020	45
75910261A	28A	20
75940041A	037	9
764000004	010	3
764020002	003	28
76410011A	020	24
76410112A	029	8
76410112A	031	6
76410241A	023	18
76410241A	039	2
76410241A	23A	18
76410501A	035	11
76410631B	037	14
76410641A	022	5
76410871A	014	6
76410871A	015	21
76410901A	019	18
76410901A	034	4
76411121A	035	8
76411141A	032	29
76411261A	020	14
76411261A	030	17
76610671C	010	6
76640172A	013	17
76640181A	013	18
768351134	002	10
77052508B	010	15
77110191A	031	21
77110391A	022	4
77110391A	027	14
77110391A	028	23
77110391A	029	18
77110441A	022	8
77110481A	017	2
77110491A	008	3
77110491A	013	10
77110518B	005	5
77110518B	009	10
77110518B	012	6
77110521A	008	2
77112351A	022	23
77113691A	018	3
77113691A	023	27
77113691B	035	10
77113731A	026	17
77113741A	026	19
77113761A	008	21
77113861A	012	5
77113861A	013	21
77116648B	23A	29
77140677C	011	13
77140697C	011	6
77140717C	011	22
77150068B	010	45
77150398B	011	16
77150408B	011	21
77150428B	019	8
77150488B	019	2
77150638B	039	8
77150658B	004	1
77150658B	010	26
77150668B	014	11
77150668B	015	13
77150670Z	002	28
77150728B	010	31
77150738B	011	17
77150788B	012	12
77150808B	010	27
77150818B	005	3
77150838B	005	2
77151250Z	002	30
77151298B	009	8
77151368B	010	24
77156378B	022	19
77156378B	023	29
77156378B	23A	26
77156398B	023	7
77156398B	036	2
77156398B	23A	7
77156628B	023	10
77156628B	23A	10
77156658B	021	4
77156658B	030	12
77156678B	018	9
77156678B	019	20
77156678B	031	19
77156678B	034	13
77156698B	039	4
77156718B	020	11
77157238B	029	27
77157239E	020	29
77157258B	024	23
77157258B	026	7
77157278B	026	13
77159358C	033	2
77159418B	026	34
77210042B	032	19
77210051B	25A	25
77210103A	008	8
77210423C	28A	1
77210591A	029	21
77210621A	003	14
77210852C	032	2
77210853B	037	2
77210853B	038	9
77210893B	020	36
77210971B	020	46
77211011B	020	26
77211131A	037	18
77211261A	038	12
77240258C	018	13
77240483C	034	21
77240583C	030	9
77250341B	010	48
77250718B	28A	17
77250748B	036	13
77250978B	035	18
77251018B	026	28
77253330ZF	011	14

CODE	NO. TABLE	POS.
77310061A	25A	14
77350068B	016	9
77350388B	019	22
77350388B	034	6
77350393B	038	7
77350618B	016	13
77354763B	23A	31
77354898B	020	15
77354898B	030	18
77355068B	020	30
77440041A	023	17
77440041A	23A	17
77440081A	032	24
77440101A	021	9
77440101A	034	20
77510071AB	021	15
77510111B	022	17
77510541A	028	16
77510631A	25A	28
77510661A	013	14
77550013C	021	1
77550211A	010	38
77550211A	013	15
77550213C	25A	22
77550221A	032	12
77550251B	021	7
77750343B	035	3
77750498C	011	10
77840041A	009	5
77850281A	026	2
77910262A	011	4
77910391A	002	3
77911092A	006	2
77911331A	014	8
77911331A	015	19
77911511AA	032	3
77911622A	009	6
77911982A	009	7
77912033A	002	7
77912061AB	031	3
77912131A	030	13
77912322A	016	25
77912371B	029	7
77913311D	028	17
77913661AB	027	9
77913661AB	029	1
77913661AB	28A	5
77913971A	027	10
77913971A	028	25
77913991A	025	4
77914041A	006	9
77914151A	028	15
77914181AA	031	22
77914181AA	31A	11
77914272A	018	1
77914651A	028	13
77915011A	005	7
77915041A	033	5
77915351AA	030	6
77915361A	030	4
77915371A	026	38
77915432B	035	13
77915471A	006	4
77915551A	023	23
77915551A	23A	23
77915601A	023	19
77915601A	23A	19
77915661BA	037	13
77915691B	036	7
77916311A	011	23
77916501AE	010	44
77940053A	017	4
77950302A	013	4
77950461A	28A	16
77950621A	010	21
78010161A	006	3
78020011A	020	18
78050012A	005	17
78610851A	007	6
78611041A	007	10
78710111A	010	19
78710111A	039	10
78810542A	012	4
78811041A	016	20
78811111C	013	11
78811151A	010	47
79120461B	007	5
79710171A	004	21
79710221A	004	4
79910241A	031	28
79910241A	31A	9
79910485A	020	10
79910491A	002	1
79910891C	017	6
79912121A	014	13
79912121A	015	16
79914821A	002	20
79914891B	029	6
79914991A	031	26
79914991A	31A	4
79915021A	014	7
79915021A	015	9
79920772A	009	14
79920881C	017	7
79940121A	010	43
800066774	026	27
800070139	01A	8
80110271A	016	4
80110311A	016	16
80610281A	020	19
80810461A	032	15
81110021A	010	50
81413031A	016	5
81413231A	016	19
81510221A	010	35
81510221A	039	9
81510281A	009	16
81810151A	004	3
81910431A	025	11
819Z0011B	25A	6
82110011A	002	26
82110901B	031	23
82110901B	31A	2
82111701B	029	5
82111701B	031	8
82112571B	012	8
82113881A	002	13
821Z0011B	014	15
821Z0011B	015	10
82411441C	31A	6
82411451C	031	18
82510431A	25A	17
82610111A	003	13
82610292A	002	33
82711392B	017	8
82711611B	031	25
82711611B	31A	8
82712981B	023	11
82712981B	23A	11
82714011A	016	24
82714331A	005	19
82714781A	035	12
82714791A	035	9
82714821A	023	20
82714821A	23A	20
82714931A	022	18
82714931A	023	22
82714931A	23A	22
82716031A	010	49
82716071A	020	22
82716081A	020	21
82810021A	016	24
82919611A	034	10
82919631B	033	3
82919641B	019	6
82919673A	022	16
82919681A	021	8
82919691B	030	15
82919711A	021	5
82919731C	030	8
82919761B	022	26
82919911A	034	23
82929921A	034	19
83012841A	011	20
83013641A	022	6
83014791A	028	4
83015422A	28A	4
83015691A	28A	12
83015761B	28A	13
830P4822C	020	6
83210261B	032	14
84010011A	014	1
84010011A	015	1
84010021A	014	1
84010021A	015	1
84010031A	014	1

CODE	NO. TABLE	POS.
84010031A	015	1
84010041A	014	1
84010041A	015	1
84010051A	014	1
84010051A	015	1
84010061A	014	1
84010061A	015	1
84010071A	014	1
84010071A	015	1
84010081A	014	1
84010081A	015	1
84010091A	014	1
84010091A	015	1
84010101A	014	1
84010101A	015	1
84010111A	014	1
84010111A	015	1
84010121A	014	1
84010121A	015	1
84010131A	014	1
84010131A	015	1
84010141A	014	1
84010141A	015	1
84010151A	014	1
84010151A	015	1
84010161A	014	1
84010161A	015	1
84010171A	014	1
84010171A	015	1
84010181A	014	1
84010181A	015	1
84010191A	014	1
84010191A	015	1
84010201A	014	1
84010201A	015	1
84010211A	014	1
84010211A	015	1
84010221A	014	1
84010221A	015	1
84010231A	014	1
84010231A	015	1
84010241A	014	1
84010241A	015	1
84010251A	014	1
84010251A	015	1
84010261A	014	1
84010261A	015	1
84010271A	014	1
84010271A	015	1
84010281A	014	1
84010281A	015	1
84010291A	014	1
84010291A	015	1
84010301A	014	1
84010301A	015	1
84010311A	014	1
84010311A	015	1
84010321A	014	1
84010321A	015	1
84010331A	014	1
84010331A	015	1
84010341A	014	1
84010341A	015	1
84010412B	014	2
84010412B	015	2
84010422B	014	2
84010422B	015	2
84010432B	014	2
84010432B	015	2
84010442B	014	2
84010442B	015	2
84010452B	014	2
84010452B	015	2
84010462B	014	2
84010462B	015	2
84010472B	014	2
84010472B	015	2
84010482B	014	2
84010482B	015	2
84010492B	014	2
84010492B	015	2
84010502B	014	2
84010502B	015	2
84010512B	014	2
84010512B	015	2
84010522B	014	2
84010522B	015	2
84010532B	014	2
84010532B	015	2
84010542B	014	2
84010542B	015	2
84010552B	014	2
84010552B	015	2
84010562B	014	2
84010562B	015	2
84010572B	014	2
84010572B	015	2
84010582B	014	2
84010582B	015	2
84010592B	014	2
84010592B	015	2
84010602B	014	2
84010602B	015	2
84010612B	014	2
84010612B	015	2
84010622B	014	2
84010622B	015	2
84010632B	014	2
84010632B	015	2
84010642B	014	2
84010642B	015	2
84010652B	014	2
84010652B	015	2
84010662B	014	2
84010662B	015	2
84010672B	014	2
84010672B	015	2
84010682B	014	2
84010682B	015	2
84010692B	014	2
84010692B	015	2
84010702B	014	2
84010702B	015	2
84010712B	014	2
84010712B	015	2
84010722B	014	2
84010722B	015	2
84010732B	014	2
84010732B	015	2
84010742B	014	2
84010742B	015	2
84010752B	014	2
84010752B	015	2
84010762B	014	2
84010762B	015	2
84010772B	014	2
84010772B	015	2
84010782B	014	2
84010782B	015	2
84010792B	014	2
84010792B	015	2
84010802B	014	2
84010802B	015	2
84010812B	014	2
84010812B	015	2
84010822B	014	2
84010822B	015	2
84010832B	014	2
84010832B	015	2
84010842B	014	2
84010842B	015	2
84010852B	014	2
84010852B	015	2
84010862B	014	2
84010862B	015	2
84010872B	014	2
84010872B	015	2
84740021A	031	27
84740021A	31A	7
84740061A	010	42
84850011A	031	12
84850021A	031	16
85010151A	029	11
85040381A	018	8
85040381A	020	32
85040471A	021	12
85040471A	023	15
85040471A	038	4
85040471A	23A	15
85040551A	038	13
85040671A	030	2
85041951AA	022	12
85110131A	008	11
85110191A	006	12
85110201A	004	9
85210011B	032	17

CODE	NO. TABLE	POS.
85210021B	032	17
85210031B	032	17
85210051A	002	14
85210241A	021	14
85210491B	026	35
85210532A	002	2
85210551A	25A	24
85210571A	025	14
85210582A	25A	3
85210591A	25A	15
85210651B	031	11
85210651C	035	14
85210721A	020	35
85210941A	002	19
85211031A	026	4
85211041H	006	11
85211041M	006	11
85211041N	006	11
85211042A	006	11
85211042B	006	11
85211042C	006	11
85211042D	006	11
85211042E	006	11
85211042F	006	11
85211042G	006	11
85211042I	006	11
85211042J	006	11
85211042K	006	11
85211042L	006	11
85211201A	009	3
85211351A	005	10
85211511A	029	12
85211511A	031	20
85211571A	032	5
85211601B	020	41
85211601B	023	25
85211601B	23A	25
85211731A	013	2
85211761A	011	15
85211761A	022	22
85211761A	027	15
85211761A	028	14
85211761A	038	19
85211771A	004	2
85211951A	005	14
85211951A	009	13
85211961B	035	17
85212181A	038	16
85212461A	010	41
85212461A	013	22
85212691A	006	15
85212971A	013	13
85213081A	011	25
85250011C	023	14
85250011C	23A	14
85250041C	020	43
85250051A	009	18
85250231A	014	5
85250231A	015	8
85250231A	016	18
85250241A	002	5
85250241A	005	16
85250241A	027	8
85250241A	028	12
85250241A	029	2
85250241A	28A	11
85250261A	011	5
85250401A	026	36
85250421A	010	30
85310021A	009	9
85310031A	010	40
85310041A	009	11
85350101A	019	24
85550001B	018	2
85550001B	022	2
85610011A	003	6
85610141A	004	11
85610311A	003	16
85610623A	008	16
85610642A	010	7
85610711A	012	9
85610743A	013	20
85611271A	038	18
86310011D	25A	11
86610301A	019	7
86610301A	034	24
86610301A	037	11
86610301A	28A	18
86610581A	034	17
86610981A	019	12
86610991A	035	15
86611121A	030	22
86640031A	28A	14
86640051A	28A	15
86640071A	035	19
87210532A	018	16
87210581A	026	21
87210601A	032	7
87310371A	009	2
87611041A	034	2
87711341A	029	16
88110101C	012	14
88110121A	002	32
88110261A	004	13
88110631A	011	7
88210031A	008	14
88440071A	032	4
88440531A	010	4
88450031A	020	44
88450031A	031	24
88450031A	31A	3
88450041A	25A	18
88450131A	005	11
88450341B	002	22
88640331A	010	23
88640371A	009	4
88641161A	029	29
88641161A	031	9
88641321A	005	12
88641321A	009	12
88641321A	010	28
88641381A	014	9
88641381A	015	11
88641731A	004	18
88641991A	010	51
88650031A	25A	16
88650481A	036	9
887130137	001	11
887130944	001	6
887130957	01A	11
887130958	01A	16
887131010	01A	12
887131038	01A	4
887131058	01A	7
887131062	01A	9
887131068	01A	2
887131071	01A	10
887131072	01A	1
887131073	01A	5
887131096	01A	13
887131515	01A	14
887131749	001	18
887131805	001	8
887131832	001	9
887131886	001	29
887131994	001	4
887132011	001	17
887132090	001	23
887132092	001	12
887132103	001	3
887132282	001	7
887132409	01A	6
887132442	001	10
887132556	001	15
887132562	01A	3
887132591	001	14
887132672	001	27
887132676	001	2
887132834	001	19
887132906	001	16
887132916	001	24
887133166	01A	17
887133218	001	1
887133220	01A	15
887133334	001	21
887133367	001	26
887133394	001	30
887133519	001	28
887133520	001	20
887651000	001	25
887651005	001	25
887651006	001	25
887651298	001	22
887651581	001	13
887651657	001	5
89320062A	010	36

CODE	NO. TABLE	POS.
89320121A	005	15
89340051A	029	22
89340091A	028	9
89340101A	027	5
89420091A	009	19
89520391B	035	2
91372011A	037	6
91372011B	037	6
91372011C	037	6
91372011D	037	6
91372011E	037	6
91372011F	037	6
91372011G	037	6
91372011L	037	6
91372261A	037	22
93010041B	026	5
93040211A	005	9
93040611A	013	7
93040931A	010	22
93041231A	010	16
93041271A	010	2
93041501A	025	6
937831524	011	11
942470014	010	5
942470036	011	24
979000252	01B	1
979000253	01B	2
979000254	01B	3
979000255	01B	4
979000256	01B	5

Ducati Motor Holding S.p.A.
Uffici Commerciali Amministrativi:
Via A. Cavalieri Ducati n. 3
40132 Bologna, Italy
Telefono 051 6413111
Fax 051 406580
Internet www.ducati.com